List of Approved Backflow Prevention Assemblies

10 June 2016

Supersedes All Prior Lists

2016 © University of Southern California

Foundation for Cross-Connection Control and Hydraulic Research

a Division of the University of Southern California

ADDITIONS:

Double Check Valve Assemblies

Reduced Pressure Priciple Assemblies

Double Check Detector Assemblies

Reduced Pressure Principle Detector Assembly

Type	Manufacturer	Model	Size	Orientation(s)	Approved
RPDA	Apollo/Conbraco	RPDALF4AN	2 1/2	VUVD	12-May-2016
RPDA	Apollo/Conbraco	RPDALF4AN	2 1/2	VUVU	12-May-2016
RPDA	Apollo/Conbraco	RPDALF4AN	3	VUVD	12-May-2016
RPDA	Apollo/Conbraco	RPDALF4AN	3	VUVU	12-May-2016

Double Check Detector Assemblies-Type II

Reduced Pressure Principle Detector Assemblies-Type II

Spill Resistant Pressure Vacuum Breakers

Notices

NOTICE REGARDING RENEWALS:
The original Certificate of Approval–identified by the Edition of the Manual and the Approved date shown in this list–is valid as of the date of this list, only if the original or renewal date shown hereon is within three (3) years of the date of this list. The responsibility to request a renewal of an Approval is that of each manufacturer. The USC Foundation retains the right of determining the extent of re-evaluation required before renewal is granted. Certificates of Approval are not recalled for the purpose of updating the effective date. This revision of date is only published via the current List of Approved Backflow Prevention Assemblies.

NOTICE REGARDING INSTALLATION:
Unless otherwise specified by the manufacturer all assemblies are to be installed on cold potable water applications - below 110oF. Also all of the assemblies listed are Approved for the INDICATED ORIENTATION(S) ONLY (Please see the legend page 6). Rotation of assemblies on either axis will invalidate the USC Foundation's Approval. Use of spare parts other than those of the original manufacturer invalidates the Approval. Rotation of shutoff valves of one bolt hole only is permitted only for the 2 1/2" and larger flanged assemblies.
NOTICE REGARDING LEAD CONTENT:
In order to determine if backflow preventers comply with lead-free requirements of several states and the Safe Drinking Water Act, USC Foundation Approved assemblies which comply with the ≤ 0.25% lead requirement are indicated by a Y in the column ≤ 0.25%Pb.

NOTICE REGARDING LIST UPDATES

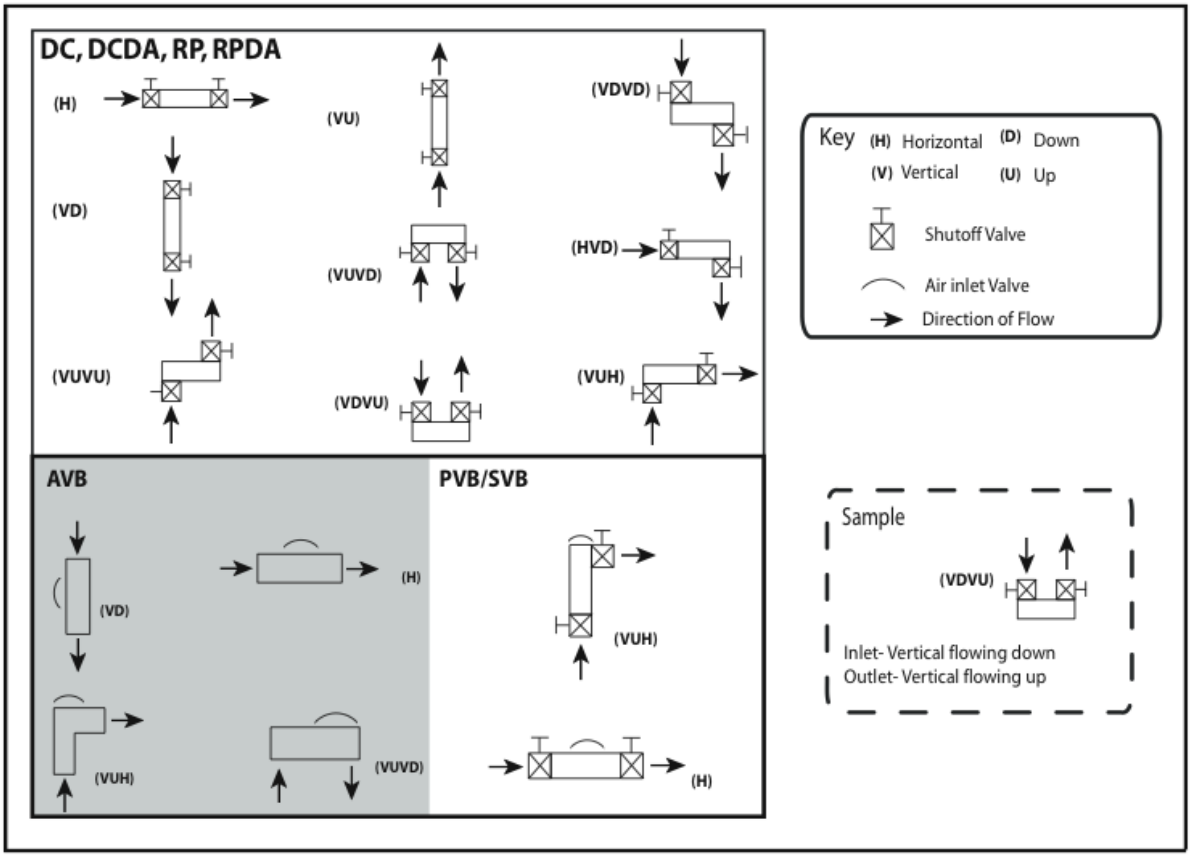
DC, DCDA, RP, RPDA
(H)
(VU)
(VDVD)
(VD)
(VUVD)
(HVD)
(VUVU)
(VDVU)
(VUH)
AVB
(VD)
(H)
(VUH)
(VUVD)
PVB/SVB
(VUH)
(H)
Key
(H) Horizontal
(D) Down
(V) Vertical
(U) Up
Shutoff Valve
Air inlet Valve
Direction of Flow
Sample
(VDVU)
Inlet- Vertical flowing down
Outlet- Vertical flowing up

Shutoff Valve Designations

The backflow prevention assemblies shown on this list have been evaluated with a specific set of shutoff valves as an integral part of the assembly. The specific shutoff valves are coded by a parenthetic code shown with each assembly. This coding of shutoff valves is defined below. Other shutoff valves having similar performance characteristics which permit the assembly to comply with the standards are also shown immediately after the original shutoff valves. The use of any shutoff valve on a specific assembly, other than those listed for that specific assembly invalidates the Approval. Assemblies listed with a Y in the “spare parts only" column may not include the shutoff valve designation.

(aa)	American Figure 1-QT
(bb)	American Figure 17-NRS RW
(cc)	American Figure 370OSY RW
(dd)	Apollo Series 7B-QT
(ee)	AVK Series 25-NRS
(ff)	AVK Series 25-OSY (Nibco F607RW OSY)
(gg)	Clow R/W Model 2640 (FxF) - NRS
	(formerly Clow R/W F6102-NRS)
(hh)	Clow R/W Model 2640 (FxF) - OSY
	(formerly Clow R/W F6136-OSY)
(ii)	Fortune Series 620/623 (C84400 Bronze) (Formerly Figure 601)
	Private labeled as: Ames, Buckner, Febco, Flomatic, Hersey and Wilkins
(jj)	Kennedy Ken Seal I-NRS
(kk)	Kennedy Ken Seal-OSY
(ll)	Kennedy Model KS-FW Figure 8561 (FxF) - NRS (2 1/2" - 10")
	Kennedy Model KS-RW Figure 7561 (FxF) - NRS (4" - 10")
	(formerly Kennedy Ken Seal II-NRS)
(mm)	Kennedy Model KS-FW Figure 8068 (FxF) - OSY (2 1/2" - 10")
	Kennedy Model KS-RW Figure 7068 (FxF) - OSY (4" - 10")
	(formerly Kennedy Ken Seal II-OSY)
(nn)	Lee Brass-QT
(oo)	Watts Model 405 (2-1/2" - 10" NRS-RW FxF)
(pp)	Watts Model 408 (2-1/2" - 10" OSY-RW FxF)
(qq)	Mueller R/W HP NRS
(rr)	Mueller R/W HP OSY
(ss)	Toro.Orion Integral Ball Valve-QT
(tt)	American Flow Control (Waterous) Series 500-NRS
(uu)	American Flow Control (Waterous Series 500-OSY
(vv)	Watts Model FBV & FBV-E (1/4" - 2" Ball Valve QT)
	Ames Model FBV & FBV-E (1/4" - 2" Ball Valve QT)
(ww)	Watts Moel G4000-FDA (2-1/2" -10" Ball Valve FxF)
(xx)	Watts Model 6080 & 6080-E (1/4" - 2" Ball Valve QT)
(yy)	Matco-Norca 10RW (NRS)
(zz)	Matco-Norca 105U (OSY)
(aaa)	American Flow Control Series 2500-NRS
(bbb)	American Flow Control Series 2500-OSY
(ccc)	M&H Model 4067-02 (NRS)
(ddd)	M&H Model 4068-02(OSY)
(eee)	Stockham Model G-610 (OSY)
(fff)	Febco Series 620 QT
(ggg)	Fortune Figure 620U-QT
(hhh)	Watts Model S-FBV & S-FBV-E (1/4" - 1" Ball Valve QT)
(iii)	Mueller Model A2360-NRS
(int)	Shutoff Valve is integral part of assembly
(jjj)	Febco Series 621-QT
(kkk)	Febco Series 620U-QT
(lll)	Mueller Model R2360-OSY
(mmm)	Conbraco Series IBVE-125-QT
(nnn)	Kennedy Model KS-FW Figure 8701 (FxF) - NRS (3" - 10") Post Indicator/Tapping
	Kennedy Model KS-RW Figure 7701 (FxF) - NRS (4" - 10") Post Indicator/Tapping
	(formerly Kennedy Ken Seal II Post Indicator/Tapping)
(ooo)	Ningbo Ball Valves (Febco 622F & 622FT, Watts Series 855-QT & Wilkins Series 850-QT)(1/4" - 2" Ball Valve QT)
(ppp)	Clow R/W Model 2639 (GxF) - NRS (2 1/2" - 3")
	Clow R/W Model 2638 (GxF) - NRS (4" - 10")
	(formerly Clow Series F6105-NRS)
(qqq)	Clow R/W Model 2639 (GxF) - OSY (2 1/2" - 3")
	Clow R/W Model 2638 (GxF) - OSY (4" - 10")
	(formerly Clow Series F6138-OSY)
(rrr)	Apollo Series 7B-308-01 (& 7B-308-31)
(sss)	Clow R/W Model 2639 (GxG) - NRS (2 1/2" - 3")
	Clow R/W Model 2638 (GxFG) - NRS (4" - 10")
	(formerly Clow Series F6104-NRS)
(ttt)	Clow R/W Model 2639 (GxG) - OSY (2 1/2" - 3")
	Clow R/W Model 2638 (GxFG) - OSY (4" - 10")
	(formerly Clow Series F6137-OSY)
(uuu)	Apollo Series 7H-QT
(vvv)	Clow R/W Model 2640 (FxF) - OSY Post Indicator/Tapping Valve
	(formerly Clow R/W F6136-OSY Post Indicator/Tapping Valve)
(www)	Clow R/W Model 2639 (GxF) - OSY (2 1/2" - 3") Post Indicator/Tapping Valve
	Clow R/W Model 2640 (GxF) - OSY (4" - 10") Post Indicator/Tapping Valve
	(formerly Clow R/W F6138-OSY Post Indicator/Tapping Valve)
(xxx)	Ningbo Union Ball Valves (Febco 622UF & 622UFT & Wilkins 850U-QT)(1/2" - 2" Ball Valve QT)
(yyy)	Victaulic Series 702 (Butterfly valves)
(zzz)	Kennedy Model KS-RW Figure 7092ABF (FxG) - OSY
	(formerly Kennedy Series 7092ABF-OSY)
(aaaa)	Union Model GV12 (flange by groove)-OSY
(bbbb)	Enbee Model GV12 (flange by groove)-OSY
(cccc)	Kennedy Model KS-RW Figure 7092 (FxG) - OSY
	(formerly Kennedy Series 7092 (GxF) - OSY)
(dddd)	Kennedy Model KS-RW Figure 7592 (FxG) - NRS
	(formerly Kennedy Series 7592ABF - NRS)
(eeee)	Kennedy Model KS-RW Figure 7592PABF (FxG) - NRS Post Indicator/Tapping Valve
	(formerly Kennedy Series 7592PABF-Post Indicator/Tapping Valve)
(ffff)	Watts Model 409 (2-1/2" - 10" OSY-RW FxF)
(gggg)	Watts Model 409 (2-1/2" - 10" OSY-RW FxG)
(hhhh)	Watts Model LF-FBV & LF-FBV-E (1/4" - 2" Ball Valve QT)
	Ames Model LF-FBV & LF-FBV-E (1/4" - 2" Ball Valve QT)
	Febco Model LF-FBV & LF-FBV-E (1/4" - 2" Ball Valve QT)
(iiii)	Wilkins Series 850XL (850TXL) - QT
(jjjj)	WATTS Model 409 (2" OSY-RW NPTxNPT)
(kkkk)	Kennedy Model KS-RW Figure 7093 (GxG) - OSY
(llll)	Kennedy Model KS-RW Figure 7593 (GxG) - NRS
(mmmm)	Kennedy Model KS-RW Figure 7093ABF (GxG) - OSY
(nnnn)	Kennedy Model KS-RW Figure 7593ABF (GxG) - NRS

(oooo)	Kennedy Model KS-RW Figure 7593PABF (GxG) - NRS Post Indicator
(pppp)	Watts Model L-FBV & L-FBV-E (1/4" - 2" Ball Valve QT)
	Ames Model L-FBV & L-FBV-E (1/4" - 2" Ball Valve QT)
	Febco Model L-FBV & L-FBV-E (1/4" - 2" Ball Valve QT)
(qqqq)	Kennedy Figure G300E - Butterfly Valve (4",6")
(rrrr)	Kennedy Figure 02G - Butterfly Valve (8")
(ssss)	Wilkins Model 48 (GXF) - NRS (2-1/2" - 12")
(tttt)	Wilkins Model 48 (FXF) - NRS (2-1/2" - 12")
(uuuu)	Wilkins Model 48 (GXG) - NRS (2-1/2" - 12") Post Indicator/Tapping Valve
(vvvv)	Wilkins Model 48 (GXF) - NRS (2-1/2" - 12") Post Indicator/Tapping Valve
(wwww)	Wilkins Model 48 (FXF) - NRS (2-1/2" - 12") Post Indicator/Tapping Valve
(xxxx)	Wilkins Model 48 (GXG) - OSY (2-1/2" - 12")
(yyyy)	Wilkins Model 48 (GXF) - OSY (2-1/2" - 12")
(zzzz)	Wilkins Model 48 (FXF) - OSY (2-1/2" - 12")
(aaaaa)	Wilkins Model 48 (GXG) - NRS (2-1/2" - 12")
(bbbbb)	Milwaukee BB-SC100 - Butterfly Valve
(ccccc)	Milwaukee BB-SCS02 - Butterfly Valve (with gearbox)
(ddddd)	Flomatic Model NRS
(eeeee)	Watts Model FBV-FP & FBV-E-FP (3/4" - 2" Ball Valve w/Gearbox)
	Ames Model LFAFBV-FP & LFAFBV-E-FP (3/4" - 2" Ball Valve w/Gearbox)
(fffff)	Watts Model L-FBV-QT (2-1/2" - 4" Ball Valve NPTxG)
(ggggg)	Wilkins Model 850MSS
(hhhhh)	Fortune Series 620/623 (c89520 unleaded bronze)
(iiiii)	Apollo Series 77B-100 and 77C-100 - QT
(jjjjj)	Apollo Series 77BLF-100 and 77CLF-100 - QT
(kkkkk)	Wilkins Model 49 (GXF) - (2 1/2" - 10")
(lllll)	Wilkins Model 49 (GXG) - (2 1/2" - 10")
(mmmmm	Wilkins 850UXL (850TUXL) -QT
(nnnnn)	Watts Model 405 (2 1/2" - 10" NRS-RW FxG)
(ooooo)	ARI HC260 and HC262 Ball Valves - QT
(ppppp)	Febco Model LF622UF & LF622UFT (1/2" - 2" Ball Valve QT)
(qqqqq)	Febco Model LF622F & LF622FT (1/2" - 2" Ball Valve QT)
(rrrrr)	Watts Model LFFBV-FRG & LFFBV-E-FRG (1/2" - 2" Ball Valve QT)
(sssss)	Apollo Series 91B and 91C-QT (1/2 - 2")
(ttttt)	Apollo Series 91BLF and 91CLF-QT (1/2 - 2")
(uuuuu)	Apollo Model 77B-LFU and 77C-LFU Union Ball Valves - QT (1/2")
(vvvvv)	Apollo Series 91BLF-U and 91CLF-U-QT (3/4"-2")
(wwwww)	Apollo Series 91B-U and 91C-U-QT (3/4"-2")
(xxxxx)	Apollo Model GV (FXG) - NRS (2-1/2" - 10")
(yyyyy)	Apollo Model GV (GXG) - NRS (2-1/2" - 10")
(zzzzz)	Apollo Model GV (FXG) - OSY (2-1/2" - 10")
(aaaaaa)	Apollo Model GV (GXG) - OSY (2-1/2" - 10")
(bbbbbb)	Apollo Model GV (FXF) - NRS (2-1/2" - 10")
(cccccc)	Apollo Model GV (FXF) - OSY (2-1/2" - 10")

Detector Assembly Meters

The Double Check Detector Assemblies (DCDA) and Reduced Pressure Principle Detector Assemblies (RPDA) contained herein have been evaluated with a specific meter as the detector element of the assembly. That specific meter is coded by a parenthetic letter shown in the "meters" column. The coding of meters is shown in this Section. Other meters having similar performance characteristics to permit the assembly to meet the Specifications are shown immediately after the original evaluation meter. The use of any other meter or modified bypass piping invalidates the Approval.

Some of the DCDA's and RPDA's utilize a line-size assembly, which is not a standard or stock Approved assembly. Increased loads are required in these line-size units to allow the assembly to accurately record low flow rates in the bypass meter. Therefore, various 'off the shelf' components can not be assembled and expected to perform satisfactorily. The bypass backflow preventer Approved with the detector assembly is listed under the "bypass" column. This is only for verification purposes. Should replacement parts or a complete by-pass be needed the model number of the complete detector assembly should be used in ordering these components.

A Hersey Model F-F 5/8" x 3/4"
B Carlon 5/8" x 3/4"
C Dandé Model D-3 5/8" x 3/4"
D Gamon-Calmet 5/8"
E Hays Acumeter 5/8" x 3/4"
F Arad 5/8" x 3/4" (Master Meter)
G Schlumberger 5/8" x 3/4" Model MBRF
H Rockwell (Sensus) SR-II 5/8" x 3/4"
I Hersey Model 430 - 5/8"
J Elster AMCO Model C700 5/8"x3/4" (Formerly Kent, ABB)
K Precision 5/8"
L Neptune Trident 8 5/8"
M Neptune T-10 5/8"(Lead free compliant version identified with NSF61 mark on meter)
N Badger Model 25 3/4"
O Badger 5/8" x 3/4" Model 25 (Lead free compliant version identified with NSF61 mark on meter)
P Hersey Model 430 Series II 5/8"
Q Hersey Model MVR-30 3/4"
R Neptune T-10 1"
S Neptune T-10 1 1/2"

Manufacturers of Approved Backflow Prevention Assemblies

Ames Fire & Waterworks - A Watts Water Technologies Company
http://www.amesfirewater.com/
1427 N. Market Blvd., Ste. 9
Sacramento, CA 95834
(916) 928-0123

Apollo/Conbraco Industries, Inc.
http://www.apollovalves.com/
P. O. Box 247
Matthews, NC 28105
(704) 847-9191

A.R.I. FLOW CONTROL ACCESSORIES
http://www.arivalves.com
Kibbutz Kfar Charuv
M.P. South Golan
ISRAEL, 12932
972-4-6761800 or 972-4-6761988

Arrowhead Brass
http://www.arrowheadbrass.com/
5147 Alhambra Ave.
Los Angeles, CA 90032
(323) 343-9790

Cash Acme
http://www.cashacme.com
2400 7th Avenue S.W.
Cullman, Alabama 35055
(256) 775-8200

Cla-Val Company
http://www.cla-val.com/
P. O. Box 1325
Newport Beach, CA 92659-0325
(949) 722-4800

Backflow Direct
www.backflowdirect.com
3290 Monier Circle, Ste. 300
Rancho Cordova, CA 95742
(916) 760-4524

FEBCO - A Watts Water Technologies Company
http://www.febcoonline.com
P. O. Box 8070
Fresno, CA 93747
(559) 252-0791

Flomatic
http://www.flomatic.com/
15 Pruyn's Island Dr.
Glen Falls, NY 12801-4424
(800) 833-2040

Hersey Meters
http://www.herseymeters.com/
10210 Statesville Blvd.
Cleveland, NC 27013
(800) 323-8584

Watts - A Watts Water Technologies Company
http://www.wattsreg.com/
815 Chestnut Street
North Andover, MA 01845
(978) 688-1811

Wilkins Regulator Company
http://www.zurn.com/operations/wilkins/pages/home.asp
1747 Commerce Way
Paso Robles, CA 93446
(800) 817-8177

Type	Manufacturer	Model	Size	Orientation(s)	Approved	Renewed	≤0.25% Pb	Manual	Shutoffs	Spare Parts	Bypass
AVB	Ames	A100	3/4	VUH	########	########	N	8		N	
AVB	Ames	A100	#	VUH	########	########	N	8		N	
AVB	Ames	A100	####	VUH	########	########	N	8		N	
AVB	Ames	A100	#	VUH	########	########	N	8		N	
AVB	Watts	288AM3	####	VUH	########	########	N	8		N	
AVB	Watts	288AM3	####	VUH	########	########	N	8		N	
AVB	Watts	288AM3	#	VUH	########	########	N	8		N	
AVB	Watts	288AM3	####	VUH	########	########	N	8		N	
AVB	Watts	288AM3	#	VUH	########	########	N	8		N	
AVB	Watts	288AM5	3/4	VUH	########	########	N	8		N	
AVB	Watts	288AM5	#	VUH	########	########	N	8		N	
DC	Ames	2000-DC	##	H	########	########	N	7	tt,ee,ff,gg,hh,ll,mm,oo,pp,uu,ccc,ddd,ffff,gggg	Y	
DC	Ames	2000-DCA	#	H	########	########	N	7	tt,ee,ff,gg,hh,ll,mm,oo,pp,uu,ccc,ddd,ffff,gggg	Y	
DC	Ames	2000-DCA	#	H	########	########	N	7	tt,ee,ff,gg,hh,ll,mm,oo,pp,uu,ccc,ddd,ffff,gggg	Y	
DC	Ames	2000-DCA	#	H	########	########	N	7	tt,ee,ff,gg,hh,ll,mm,oo,pp,uu,ccc,ddd,ffff,gggg	Y	
DC	Ames	2000-G-DC	##	H	########	########	N	7	tt,ee,ff,gg,hh,ll,mm,oo,pp,uu,ccc,ddd,ffff,gggg	Y	
DC	Ames	2000-G-DCA	#	H	########	########	N	7	tt,ee,ff,gg,hh,ll,mm,oo,pp,uu,ccc,ddd,ffff,gggg	Y	
DC	Ames	2000-G-DCA	#	H	########	########	N	7	tt,ee,ff,gg,hh,ll,mm,oo,pp,uu,ccc,ddd,ffff,gggg	Y	
DC	Ames	2000-G-DCA	#	H	########	########	N	7	tt,ee,ff,gg,hh,ll,mm,oo,pp,uu,ccc,ddd,ffff,gggg	Y	
DC	Ames	2000B	1/2	H	########	########	N	8	(vv),xx,ooo,hhhh,pppp,rrrrr	N	
DC	Ames	2000B	1/2	H	########	########	N	9	(vv),xx,ooo,hhhh,pppp,rrrrr	N	
DC	Ames	2000B	1/2	VU	########	########	N	9	(vv),xx,ooo,hhhh,pppp,rrrrr	N	
DC	Ames	2000B	3/4	H	########	########	N	8	(vv),xx,ooo,hhhh,pppp,rrrrr	N	
DC	Ames	2000B	3/4	VU	########	########	N	8	(vv),xx,ooo,hhhh,pppp,rrrrr	N	
DC	Ames	2000B	#	H	########	########	N	9	(vv),xx,ooo,hhhh,pppp,rrrrr	N	
DC	Ames	2000B	#	H	########	########	N	8	(vv),xx,ooo,hhhh,pppp,rrrrr	N	
DC	Ames	2000B	#	VU	########	########	N	9	(vv),xx,ooo,hhhh,pppp,rrrrr	N	
DC	Ames	2000B	####	H	########	########	N	8	(vv),xx,ooo,hhhh,pppp,rrrrr	N	
DC	Ames	2000B	####	VU	########	########	N	8	(vv),xx,ooo,hhhh,pppp,rrrrr	N	
DC	Ames	2000B	####	H	########	########	N	8	(vv),xx,ooo,hhhh,pppp,rrrrr	N	
DC	Ames	2000B	####	VU	########	########	N	8	(vv),xx,ooo,hhhh,pppp,rrrrr	N	
DC	Ames	2000B	#	H	########	########	N	8	(vv),xx,ooo,hhhh,pppp,rrrrr	N	
DC	Ames	2000B	#	VU	########	########	N	8	(vv),xx,ooo,hhhh,pppp,rrrrr	N	
DC	Ames	2000B-FP	3/4	H	########	########	N	9	(eeeee)	N	
DC	Ames	2000B-FP	#	H	########	########	N	9	(eeeee)	N	
DC	Ames	2000B-FP	####	H	########	########	N	9	(eeeee)	N	
DC	Ames	2000B-FP	####	H	########	########	N	9	(eeeee)	N	
DC	Ames	2000B-FP	#	H	########	########	N	9	(eeeee)	N	
DC	Ames	2000BM3	3/4	H	########	########	N	9	(vv),xx,ooo,hhhh,pppp,rrrrr	N	
DC	Ames	2000BM3	3/4	VU	########	########	N	9	(vv),xx,ooo,hhhh,pppp,rrrrr	N	
DC	Ames	2000BM3-FP	3/4	H	########	########	N	9	(eeeee)	N	
DC	Ames	2000CIV	#	H	########	########	N	6	(oo),gg,hh,ll,mm,pp,tt,uu,eee	N	
DC	Ames	2000CIV	#	VU	########	########	N	8	(oo),gg,hh,ll,mm,pp,tt,uu,eee	N	
DC	Ames	2000CIV	#	H	########	########	N	6	(oo),gg,hh,ll,mm,pp,tt,uu,eee	N	
DC	Ames	2000CIV	#	VU	########	########	N	8	(oo),gg,hh,ll,mm,pp,tt,uu,eee	N	
DC	Ames	2000CIV	#	H	########	########	N	6	(oo),gg,hh,ll,mm,pp,tt,uu,eee	N	
DC	Ames	2000CIV	#	VU	########	########	N	8	(oo),gg,hh,ll,mm,pp,tt,uu,eee	N	
DC	Ames	2000CIV	##	H	########	########	N	6	(oo),gg,hh,ll,mm,pp,tt,uu,eee	N	
DC	Ames	2000CIV	##	VU	########	########	N	8	(oo),gg,hh,ll,mm,pp,tt,uu,eee	N	
DC	Ames	2000SE	####	H	########	########	N	8	(mm),ee,ff,gg,hh,ll,mm,oo,pp,tt,uu,ccc,ddd,ffff,gggg	N	
DC	Ames	2000SE	#	H	########	########	N	8	tt,ee,ff,gg,hh,ll,mm,oo,pp,uu,ccc,ddd,ffff,gggg	Y	
DC	Ames	2000SE	#	H	########	########	N	8	tt,ee,ff,gg,hh,ll,mm,oo,pp,uu,ccc,ddd,ffff,gggg	Y	
DC	Ames	2000SS	3/4	H	########	########	N	8	ii	Y	
DC	Ames	2000SS	#	H	########	########	N	8	ii	Y	
DC	Ames	2000SS	####	H	########	########	N	8	ii	Y	
DC	Ames	2000SS	####	H	########	########	N	8	ii	Y	
DC	Ames	2000SS	#	H	########	########	N	8	ii	Y	
DC	Ames	2000SS	####	H	########	########	N	8	(tt),ee,ff,gg,hh,pp,uu,ccc,ddd	N	
DC	Ames	2000SS	####	H	########	########	Y	8	ll,mm,oo,ffff,gggg	N	
DC	Ames	2000SS	#	H	########	########	N	8	(tt),ee,ff,gg,hh,pp,uu,ccc,ddd	N	
DC	Ames	2000SS	#	H	########	########	Y	8	ll,mm,oo,ffff,gggg	N	
DC	Ames	2000SS	#	H	########	########	N	8	(tt),ee,ff,gg,hh,pp,uu,ccc,ddd	N	
DC	Ames	2000SS	#	H	########	########	Y	8	ll,mm,oo,ffff,gggg	N	
DC	Ames	2000SS	#	H	########	########	N	8	(tt),ee,ff,gg,hh,pp,uu,ccc,ddd	N	
DC	Ames	2000SS	#	H	########	########	Y	8	ll,mm,oo,ffff,gggg	N	
DC	Ames	2000SS	#	H	########	########	N	8	(tt),ee,ff,gg,hh,pp,uu,ccc,ddd	N	
DC	Ames	2000SS	#	H	########	########	Y	8	ll,mm,oo,ffff,gggg	N	
DC	Ames	2000SS	##	H	########	########	N	8	pp,	N	
DC	Ames	2000SS	##	H	########	########	Y	8	(ll),mm,oo	N	
DC	Ames	2000SS	##	H	########	########	N	9	pp,	N	
DC	Ames	2000SS	##	H	########	########	Y	9	(ll),mm,oo	N	
DC	Ames	2000SS	##	VU	########	########	N	9	pp,	N	
DC	Ames	2000SS	##	VU	########	########	Y	9	(ll),mm,oo	N	
DC	Ames	2000SS-M	#	H	########	########	N	8	(tt),ee,ff,gg,hh,ll,mm,oo,pp,uu,ccc,ddd,ffff,gggg	N	
DC	Ames	2000SS-M	#	H	########	########	N	8	(tt),ee,ff,gg,hh,ll,mm,oo,pp,uu,ccc,ddd,ffff,gggg	N	
DC	Ames	200B	1/2	H	########	########	N	9	(vv),xx,ooo,hhhh,pppp,rrrrr	N	
DC	Ames	200B	1/2	VD	########	########	N	9	(vv),xx,ooo,hhhh,pppp,rrrrr	N	
DC	Ames	200B	1/2	VU	########	########	N	9	(vv),xx,ooo,hhhh,pppp,rrrrr	N	
DC	Ames	200B	3/4	H	########	########	N	9	(vv),xx,ooo,hhhh,pppp,rrrrr	N	
DC	Ames	200B	3/4	VD	########	########	N	9	(vv),xx,ooo,hhhh,pppp,rrrrr	N	
DC	Ames	200B	3/4	VU	########	########	N	9	(vv),xx,ooo,hhhh,pppp,rrrrr	N	
DC	Ames	200B	#	H	########	########	N	9	(vv),xx,ooo,hhhh,pppp,rrrrr	N	
DC	Ames	200B	#	VD	########	########	N	9	(vv),xx,ooo,hhhh,pppp,rrrrr	N	
DC	Ames	200B	#	VU	########	########	N	9	(vv),xx,ooo,hhhh,pppp,rrrrr	N	
DC	Ames	200B	####	H	########	########	N	9	(vv),xx,ooo,hhhh,pppp,rrrrr	N	
DC	Ames	200B	####	VD	########	########	N	9	(vv),xx,ooo,hhhh,pppp,rrrrr	N	
DC	Ames	200B	####	VU	########	########	N	9	(vv),xx,ooo,hhhh,pppp,rrrrr	N	
DC	Ames	200B	####	H	########	########	N	9	(vv),xx,ooo,hhhh,pppp,rrrrr	N	
DC	Ames	200B	####	VD	########	########	N	9	(vv),xx,ooo,hhhh,pppp,rrrrr	N	
DC	Ames	200B	####	VU	########	########	N	9	(vv),xx,ooo,hhhh,pppp,rrrrr	N	
DC	Ames	200B	#	H	########	########	N	9	(vv),xx,ooo,hhhh,pppp,rrrrr	N	
DC	Ames	200B	#	VD	########	########	N	9	(vv),xx,ooo,hhhh,pppp,rrrrr	N	
DC	Ames	200B	#	VU	########	########	N	9	(vv),xx,ooo,hhhh,pppp,rrrrr	N	
DC	Ames	200B R10	1/2	H	########	########	N	9	(vv),xx,ooo,hhhh,pppp,rrrrr	N	
DC	Ames	200B R10	1/2	VD	########	########	N	9	(vv),xx,ooo,hhhh,pppp,rrrrr	N	
DC	Ames	200B R10	1/2	VU	########	########	N	9	(vv),xx,ooo,hhhh,pppp,rrrrr	N	
DC	Ames	200B R10	3/4	H	########	########	N	9	(vv),xx,ooo,hhhh,pppp,rrrrr	N	
DC	Ames	200B R10	3/4	VD	########	########	N	9	(vv),xx,ooo,hhhh,pppp,rrrrr	N	
DC	Ames	200B R10	3/4	VU	########	########	N	9	(vv),xx,ooo,hhhh,pppp,rrrrr	N	
DC	Ames	200B-A	1/2	VUVU	########	########	N	9	(vv),xx,ooo,hhhh,pppp,rrrrr	N	
DC	Ames	200B-A	#	VUVU	########	########	N	9	(vv),xx,ooo,hhhh,pppp,rrrrr	N	
DC	Ames	200B-A	####	VUVU	########	########	N	9	(vv),xx,ooo,hhhh,pppp,rrrrr	N	
DC	Ames	200B-A	####	VUVU	########	########	N	9	(vv),xx,ooo,hhhh,pppp,rrrrr	N	
DC	Ames	200B-A	#	VUVU	########	########	N	9	(vv),xx,ooo,hhhh,pppp,rrrrr	N	
DC	Ames	200B-AR10	1/2	VUVU	########		N	9	(vv),xx,ooo,hhhh,pppp,rrrrr	N	
DC	Ames	200B-AR10	3/4	VUVU	########		N	9	(vv),xx,ooo,hhhh,pppp,rrrrr	N	
DC	Ames	Colt 200	####	H	########	########	N	9	(ppp),qqq,nnnnn	N	
DC	Ames	Colt 200	####	H	########	########	Y	9	yyy,zzz,dddd,eeee,dddd,gggg,kkkk,llll,mmmm,nnnn	N	
DC	Ames	Colt 200	####	VU	########	########	N	9	(ppp),qqq,nnnnn	N	
DC	Ames	Colt 200	####	VU	########	########	Y	9	yyy,zzz,dddd,eeee,dddd,gggg,kkkk,llll,mmmm,nnnn	N	
DC	Ames	Colt 200	#	H	########	########	N	9	(ppp),qqq,nnnnn	N	
DC	Ames	Colt 200	#	H	########	########	Y	9	yyy,zzz,dddd,eeee,dddd,gggg,kkkk,llll,mmmm,nnnn	N	
DC	Ames	Colt 200	#	VU	########	########	N	9	(ppp),qqq,nnnnn	N	
DC	Ames	Colt 200	#	VU	########	########	Y	9	yyy,zzz,dddd,eeee,dddd,gggg,kkkk,llll,mmmm,nnnn	N	
DC	Ames	Colt 200	#	H	########	########	N	9	(ppp),qqq,nnnnn	N	
DC	Ames	Colt 200	#	H	########	########	Y	9	yyy,zzz,dddd,eeee,dddd,gggg,kkkk,llll,mmmm,nnnn	N	
DC	Ames	Colt 200	#	VU	########	########	N	9	(ppp),qqq,nnnnn	N	
DC	Ames	Colt 200	#	VU	########	########	Y	9	yyy,zzz,dddd,eeee,dddd,gggg,kkkk,llll,mmmm,nnnn	N	
DC	Ames	Colt 200	#	H	########	########	N	9	(ppp),qqq,aaaa,bbbb,nnnnn	N	
DC	Ames	Colt 200	#	H	########	########	Y	9	yyy,zzz,dddd,eeee,ffff,gggg,kkkk,llll,mmmm,nnnn	N	
DC	Ames	Colt 200	#	VU	########	########	N	9	(ppp),qqq,aaaa,bbbb,nnnnn	N	
DC	Ames	Colt 200	#	VU	########	########	Y	9	yyy,zzz,dddd,eeee,ffff,gggg,kkkk,llll,mmmm,nnnn	N	
DC	Ames	Colt 200	#	H	########	########	N	9	ppp,qqq,aaaa,bbbb,nnnnn	N	
DC	Ames	Colt 200	#	H	########	########	Y	9	(yyy),zzz,dddd,eeee,gggg,kkkk,llll,mmmm,nnnn	N	
DC	Ames	Colt 200	#	VU	########	########	N	9	ppp,qqq,aaaa,bbbb,nnnnn	N	

Type	Manufacturer	Model	Size	Orientation(s)	Approved	Renewed	≤0.25% Pb	Manual	Shutoffs	Spare Parts	Bypass
DC	Ames	Colt 200	#	VU	########	########	Y	9	(yyy),zzz,dddd,eeee,gggg,kkkk,llll,mmmm,nnnn	N	
DC	Ames	Colt 200	##	H	########	########	N	9	ppp,qqq,aaaa,bbbb	N	
DC	Ames	Colt 200	##	H	########	########	Y	9	yyy,zzz,dddd,eeee,ggg,kkkk,llll,mmmm,nnnn	N	
DC	Ames	Colt 200	##	VU	########	########	N	9	(ppp),qqq,aaaa,bbbb	N	
DC	Ames	Colt 200	##	VU	########		Y	9	yyy,zzz,dddd,eeee,ggg,kkkk,llll,mmmm,nnnn	N	
DC	Ames	Colt 200a	####	H	########	########	N	9	(ppp),fff,qqq,yyy,zzz,aaaa,bbbb,dddd,eeee,gggg,kkkk,llll,mmmm,nnnn,nnnnn	N	
DC	Ames	Colt 200a	####	VU	########	########	N	9	(ppp),qqq,yyy,zzz,aaaa,bbbb,dddd,eeee,ffff,gggg,kkkk,llll,mmmm,nnnn,nnnnn	N	
DC	Ames	Colt 200a	#	H	########	########	N	9	(ppp),qqq,yyy,zzz,aaaa,bbbb,dddd,eeee,ffff,gggg,kkkk,llll,mmmm,nnnn,nnnnn	N	
DC	Ames	Colt 200a	#	VU	########	########	N	9	(ppp),qqq,yyy,zzz,aaaa,bbbb,dddd,eeee,ffff,gggg,kkkk,llll,mmmm,nnnn,nnnnn	N	
DC	Ames	Colt 200a	#	H	########	########	N	9	(ppp),qqq,yyy,zzz,aaaa,bbbb,dddd,eeee,ffff,gggg,kkkk,llll,mmmm,nnnn,nnnnn	N	
DC	Ames	Colt 200a	#	VU	########	########	N	9	(ppp),qqq,yyy,zzz,aaaa,bbbb,dddd,eeee,ffff,gggg,kkkk,llll,mmmm,nnnn,nnnnn	N	
DC	Ames	Colt 200a	#	VU	########	########	N	9	(ppp),qqq,yyy,zzz,aaaa,bbbb,dddd,eeee,ffff,gggg,kkkk,llll,mmmm,nnnn,nnnnn	N	
DC	Ames	Colt 200N	####	VUVU	########	########	N	9	(ppp),qqq,nnnnn	N	
DC	Ames	Colt 200N	####	VUVU	########	########	Y	9	yyy,zzz,dddd,eeee,dddd,gggg,kkkk,llll,mmmm,nnnn	N	
DC	Ames	Colt 200N	#	VUVU	########	########	N	9	(ppp),qqq,nnnnn	N	
DC	Ames	Colt 200N	#	VUVU	########	########	Y	9	yyy,zzz,dddd,eeee,dddd,gggg,kkkk,llll,mmmm,nnnn	N	
DC	Ames	Colt 200N	#	VUVU	########	########	N	9	(ppp),qqq,nnnnn	N	
DC	Ames	Colt 200N	#	VUVU	########	########	Y	9	yyy,zzz,dddd,eeee,dddd,gggg,kkkk,llll,mmmm,nnnn	N	
DC	Ames	Colt 200N	#	VUVU	########	########	N	9	(ppp),qqq,nnnnn	N	
DC	Ames	Colt 200N	#	VUVU	########	########	Y	9	yyy,zzz,dddd,eeee,dddd,gggg,kkkk,llll,mmmm,nnnn	N	
DC	Ames	Colt 200N	#	VUVU	########	########	N	9	ppp,qqq,aaaa,bbbb	N	
DC	Ames	Colt 200N	#	VUVU	########	########	Y	9	yyy, zzz,dddd,eeee,gggg,kkkk,llll,mmmm,nnnn	N	
DC	Ames	Colt 200N	##	VUVU	########	########	N	9	(ppp),qqq	N	
DC	Ames	Colt 200N	##	VUVU	########	########	Y	9	yyy,zzz,dddd,eeee,dddd,gggg,kkkk,llll,mmmm,nnnn	N	
DC	Ames	Colt 200Na	####	VUVU	########	########	N	9	(ppp),qqq,yyy,zzz,aaaa,bbbb,dddd,eeee,ffff,gggg,kkkk,llll,mmmm,nnnn,nnnnn	N	
DC	Ames	Colt 200Na	#	VUVU	########	########	N	9	(ppp),qqq,yyy,zzz,aaaa,bbbb,dddd,eeee,ffff,gggg,kkkk,llll,mmmm,nnnn,nnnnn	N	
DC	Ames	Colt 200Na	#	VUVU	########	########	N	9	(ppp),qqq,yyy,zzz,aaaa,bbbb,dddd,eeee,ffff,gggg,kkkk,llll,mmmm,nnnn,nnnnn	N	
DC	Ames	Colt 200Na	#	VUVU	########	########	N	9	(ppp),qqq,yyy,zzz,aaaa,bbbb,dddd,eeee,ffff,gggg,kkkk,llll,mmmm,nnnn,nnnnn	N	
DC	Ames	DC	#	H	########	########	N	6	oo,pp,ffff,gggg	Y	
DC	Ames	DC	#	H	########	########	N	6	oo,pp,ffff,gggg	Y	
DC	Ames	DC	#	H	########	########	N	7	oo,pp,ffff,gggg	Y	
DC	Ames	DC	##								
DC	Ames	DC	##								
DC	Ames	DCA	#								
DC	Ames	DCA	#								
DC	Ames	DCA	#								
DC	Ames	DCA	#								
DC	Ames	DCA	#								
DC	Ames	DCA	#								
DC	Ames	LF2000B	1/2	H	########		Y	9	(hhhh)	N	
DC	Ames	LF2000B	1/2	VU	########		Y	9	(hhhh)	N	
DC	Ames	LF2000BM1	#	H	########		Y	9	(hhhh)	N	
DC	Ames	LF2000BM1	#	VU	########		Y	9	(hhhh)	N	
DC	Ames	LF2000BM1	#	H	########		Y	9	(hhhh)	N	
DC	Ames	LF2000BM1	#	VU	########		Y	9	(hhhh)	N	
DC	Ames	LF2000BM2	####	H	########		Y	8	(hhhh)	N	
DC	Ames	LF2000BM2	####	VU	########		Y	8	(hhhh)	N	
DC	Ames	LF2000BM2	####	H	########		Y	8	(hhhh)	N	
DC	Ames	LF2000BM2	####	VU	########		Y	8	(hhhh)	N	
DC	Ames	LF2000BM3	3/4	H	########		Y	9	(hhhh)	N	
DC	Ames	LF2000BM3	3/4	VU	########		Y	9	(hhhh)	N	
DC	Ames	LF200B	1/2	H	########		Y	9	(hhhh)	N	
DC	Ames	LF200B	1/2	VD	########		Y	9	(hhhh)	N	
DC	Ames	LF200B	1/2	VU	########		Y	9	(hhhh)	N	
DC	Ames	LF200B	3/4	H	########		Y	9	(hhhh)	N	
DC	Ames	LF200B	3/4	VD	########		Y	9	(hhhh)	N	
DC	Ames	LF200B	3/4	VU	########		Y	9	(hhhh)	N	
DC	Ames	LF200B	#	H	########	########	N	9	(vv),xx,ooo,hhhh,pppp,rrrrr	N	
DC	Ames	LF200B	#	VD	########	########	N	9	(vv),xx,ooo,hhhh,pppp,rrrrr	N	
DC	Ames	LF200B	#	VU	########	########	N	9	(vv),xx,ooo,hhhh,pppp,rrrrr	N	
DC	Ames	LF200B	####	H	########	########	N	9	(vv),xx,ooo,hhhh,pppp,rrrrr	N	
DC	Ames	LF200B	####	VD	########	########	N	9	(vv),xx,ooo,hhhh,pppp,rrrrr	N	
DC	Ames	LF200B	####	VU	########	########	N	9	(vv),xx,ooo,hhhh,pppp,rrrrr	N	
DC	Ames	LF200B	####	H	########	########	N	9	(vv),xx,ooo,hhhh,pppp,rrrrr	N	
DC	Ames	LF200B	####	VD	########	########	N	9	(vv),xx,ooo,hhhh,pppp,rrrrr	N	
DC	Ames	LF200B	####	VU	########	########	N	9	(vv),xx,ooo,hhhh,pppp,rrrrr	N	
DC	Ames	LF200B	#	H	########	########	N	9	(vv),xx,ooo,hhhh,pppp,rrrrr	N	
DC	Ames	LF200B	#	VD	########	########	N	9	(vv),xx,ooo,hhhh,pppp,rrrrr	N	
DC	Ames	LF200B	#	VU	########	########	N	9	(vv),xx,ooo,hhhh,pppp,rrrrr	N	
DC	Ames	LF200B R10	1/2	H	########	########	N	9	(vv),xx,ooo,hhhh,pppp,rrrrr	N	
DC	Ames	LF200B R10	1/2	VD	########	########	N	9	(vv),xx,ooo,hhhh,pppp,rrrrr	N	
DC	Ames	LF200B R10	1/2	VU	########	########	N	9	(vv),xx,ooo,hhhh,pppp,rrrrr	N	
DC	Ames	LF200B R10	3/4	H	########	########	N	9	(vv),xx,ooo,hhhh,pppp,rrrrr	N	
DC	Ames	LF200B R10	3/4	VD	########	########	N	9	(vv),xx,ooo,hhhh,pppp,rrrrr	N	
DC	Ames	LF200B R10	3/4	VU	########	########	N	9	(vv),xx,ooo,hhhh,pppp,rrrrr	N	
DC	Ames	LF200B-A	#	VUVU	########	########	N	9	(vv),xx,ooo,hhhh,pppp,rrrrr	N	
DC	Ames	LF200B-A	####	VUVU	########	########	N	9	(vv),xx,ooo,hhhh,pppp,rrrrr	N	
DC	Ames	LF200B-A	####	VUVU	########	########	N	9	(vv),xx,ooo,hhhh,pppp,rrrrr	N	
DC	Ames	LF200B-A	#	VUVU	########	########	N	9	(vv),xx,ooo,hhhh,pppp,rrrrr	N	
DC	Ames	LFU200B	#	H	########	########	N	9	(vv),xx,ooo,hhhh,pppp	N	
DC	Ames	LFU200B	#	VD	########	########	N	9	(vv),xx,ooo,hhhh,pppp	N	
DC	Ames	LFU200B	#	VU	########	########	N	9	(vv),xx,ooo,hhhh,pppp	N	
DC	Ames	LFU200B	####	H	########	########	N	9	(vv),xx,ooo,hhhh,pppp	N	
DC	Ames	LFU200B	####	VD	########	########	N	9	(vv),xx,ooo,hhhh,pppp	N	
DC	Ames	LFU200B	####	VU	########	########	N	9	(vv),xx,ooo,hhhh,pppp	N	
DC	Ames	LFU200B	####	H	########	########	N	9	(vv),xx,ooo,hhhh,pppp	N	
DC	Ames	LFU200B	####	VD	########	########	N	9	(vv),xx,ooo,hhhh,pppp	N	
DC	Ames	LFU200B	####	VU	########	########	N	9	(vv),xx,ooo,hhhh,pppp	N	
DC	Ames	LFU200B	#	H	########	########	N	9	(vv),xx,ooo,hhhh,pppp	N	
DC	Ames	LFU200B	#	VD	########	########	N	9	(vv),xx,ooo,hhhh,pppp	N	
DC	Ames	LFU200B	#	VU	########	########	N	9	(vv),xx,ooo,hhhh,pppp	N	
DC	Ames	Maxim 200	####	H	########	########	N	9	(ppp),qqq,nnnnn	N	
DC	Ames	Maxim 200	####	H	########	########	Y	9	yyy,dddd,eeee,gggg,kkkk,llll,mmmm,nnnn	N	
DC	Ames	Maxim 200	####	VU	########	########	N	9	(ppp),qqq,nnnnn	N	
DC	Ames	Maxim 200	####	VU	########	########	Y	9	yyy,dddd,eeee,gggg,kkkk,llll,mmmm,nnnn	N	
DC	Ames	Maxim 200	#	H	########	########	N	9	(ppp),qqq,nnnnn	N	
DC	Ames	Maxim 200	#	H	########	########	Y	9	yyy,dddd,eeee,gggg,kkkk,llll,mmmm,nnnn	N	
DC	Ames	Maxim 200	#	VU	########	########	N	9	(ppp),qqq,nnnnn	N	
DC	Ames	Maxim 200	#	VU	########	########	Y	9	yyy,dddd,eeee,gggg,kkkk,llll,mmmm,nnnn	N	
DC	Ames	Maxim 200	#	H	########	########	N	9	(ppp),qqq,aaaa,bbbb,nnnnn	N	
DC	Ames	Maxim 200	#	H	########	########	Y	9	yyy,zzz,dddd,eeee,gggg,kkkk,llll,mmmm,nnnn	N	
DC	Ames	Maxim 200	#	VU	########	########	N	9	(ppp),qqq,aaaa,bbbb,nnnnn	N	
DC	Ames	Maxim 200	#	VU	########	########	Y	9	yyy,zzz,dddd,eeee,gggg,kkkk,llll,mmmm,nnnn	N	
DC	Ames	Maxim 200	#	H	########	########	N	9	ppp,qqq,aaaa,bbbb,nnnnn	N	
DC	Ames	Maxim 200	#	H	########	########	Y	9	(yyy),zzz,dddd,eeee,gggg,kkkk,llll,mmmm,nnnn	N	
DC	Ames	Maxim 200	#	VU	########	########	N	9	ppp,qqq,aaaa,bbbb,nnnnn	N	
DC	Ames	Maxim 200	#	VU	########	########	Y	9	(yyy),zzz,dddd,eeee,gggg,kkkk,llll,mmmm,nnnn	N	
DC	Ames	Maxim 200	#	H	########	########	N	9	ppp,qqq,aaaa,bbbb,nnnnn	N	
DC	Ames	Maxim 200	#	H	########	########	Y	9	(yyy),zzz,dddd,eeee,gggg	N	
DC	Ames	Maxim 200	#	VU	########	########	N	9	ppp,qqq,aaaa,bbbb,nnnnn	N	
DC	Ames	Maxim 200	#	VU	########	########	Y	9	(yyy),zzz,dddd,eeee,gggg	N	
DC	Ames	Maxim 200	##	H	########	########	N	9	(ppp),qqq,aaaa,bbbb	N	
DC	Ames	Maxim 200	##	H	########	########	Y	9	yyy,zzz,dddd,eeee,gggg	N	
DC	Ames	Maxim 200	##	VU	########	########	N	9	(ppp),qqq,aaaa,bbbb	N	
DC	Ames	Maxim 200	##	VU	########	########	Y	9	yyy,zzz,dddd,eeee,gggg	N	
DC	Ames	Maxim 200a	####	H	########	########	N	9	(yyy),ppp,qqq,zzz,aaaa,bbbb,dddd,eeee,gggg,nnnnn	N	
DC	Ames	Maxim 200a	####	VU	########	########	N	9	(yyy),ppp,qqq,zzz,aaaa,bbbb,dddd,eeee,gggg,nnnnn	N	
DC	Ames	Maxim 200a	#	H	########	########	N	9	(yyy),ppp,qqq,zzz,aaaa,bbbb,dddd,eeee,gggg,nnnnn	N	
DC	Ames	Maxim 200a	#	VU	########	########	N	9	(yyy),ppp,qqq,zzz,aaaa,bbbb,dddd,eeee,gggg,nnnnn	N	
DC	Ames	Maxim 200a	#	H	########	########	N	9	(yyy),ppp,qqq,zzz,aaaa,bbbb,dddd,eeee,gggg,nnnnn	N	
DC	Ames	Maxim 200a	#	VU	########	########	N	9	(yyy),ppp,qqq,zzz,aaaa,bbbb,dddd,eeee,gggg,nnnnn	N	
DC	Ames	Maxim 200N	####	VUVU	########	########	N	9	(ppp),qqq,nnnnn	N	
DC	Ames	Maxim 200N	####	VUVU	########	########	Y	9	yyy,zzz,dddd,eeee,dddd,gggg,kkkk,llll,mmmm,nnnn	N	
DC	Ames	Maxim 200N	#	VUVU	########	########	N	9	(ppp),qqq,nnnnn	N	

Type	Manufacturer	Model	Size	Orientation(s)	Approved	Renewed	≤0.25% Pb	Manual	Shutoffs	Spare Parts	Bypass
DC	Ames	Maxim 200N	#	VUVU	########	########	Y	9	yyy,zzz,dddd,eeee,dddd,gggg,kkkk,llll,mmmm,nnnn	N	
DC	Ames	Maxim 200N	#	VUVU	########	########	N	9	(ppp),qqq,nnnnn	N	
DC	Ames	Maxim 200N	#	VUVU	########	########	Y	9	yyy,zzz,dddd,eeee,dddd,gggg,kkkk,llll,mmmm,nnnn	N	
DC	Ames	Maxim 200N	#	VUVU	########	########	N	9	ppp,qqq,aaaa,bbbb	N	
DC	Ames	Maxim 200N	#	VUVU	########	########	Y	9	yyy,zzz,dddd,eeee,gggg,kkkk,llll,mmmm,nnnn	N	
DC	Ames	Maxim 200N	#	VUVU	########	########	N	9	(ppp),qqq,nnnnn	N	
DC	Ames	Maxim 200N	#	VUVU	########	########	Y	9	yyy,zzz,dddd,eeee,gggg,kkkk,llll,mmmm,nnnn	N	
DC	Ames	Maxim 200Na	####	VUVU	########	########	N	9	(yyy),ppp,qqq,zzz,aaaa,bbbb,dddd,eeee,gggg,nnnnn	N	
DC	Ames	Maxim 200Na	#	VUVU	########	########	N	9	(yyy),ppp,qqq,zzz,aaaa,bbbb,dddd,eeee,gggg,nnnnn	N	
DC	Ames	Maxim 200Na	#	VUVU	########	########	N	9	(yyy),ppp,qqq,zzz,aaaa,bbbb,dddd,eeee,gggg,nnnnn	N	
DC	Ames	U200B	#	H	########	########	N	9	(vv),xx,ooo,hhhh,pppp	N	
DC	Ames	U200B	#	VD	########	########	N	9	(vv),xx,ooo,hhhh,pppp	N	
DC	Ames	U200B	#	VU	########	########	N	9	(vv),xx,ooo,hhhh,pppp	N	
DC	Ames	U200B	####	H	########	########	N	9	(vv),xx,ooo,hhhh,pppp	N	
DC	Ames	U200B	####	VD	########	########	N	9	(vv),xx,ooo,hhhh,pppp	N	
DC	Ames	U200B	####	VU	########	########	N	9	(vv),xx,ooo,hhhh,pppp	N	
DC	Ames	U200B	####	H	########	########	N	9	(vv),xx,ooo,hhhh,pppp	N	
DC	Ames	U200B	####	VD	########	########	N	9	(vv),xx,ooo,hhhh,pppp	N	
DC	Ames	U200B	####	VU	########	########	N	9	(vv),xx,ooo,hhhh,pppp	N	
DC	Ames	U200B	#	H	########	########	N	9	(vv),xx,ooo,hhhh,pppp	N	
DC	Ames	U200B	#	VD	########	########	N	9	(vv),xx,ooo,hhhh,pppp	N	
DC	Ames	U200B	#	VU	########	########	N	9	(vv),xx,ooo,hhhh,pppp	N	
DC	Ames	U200BR10	1/2	H	########	########	N	9	(vv),xx,ooo,hhhh,pppp	N	
DC	Ames	U200BR10	1/2	VD	########	########	N	9	(vv),xx,ooo,hhhh,pppp	N	
DC	Ames	U200BR10	1/2	VU	########	########	N	9	(vv),xx,ooo,hhhh,pppp	N	
DC	Ames	U200BR10	3/4	H	########	########	N	9	(vv),xx,ooo,hhhh,pppp	N	
DC	Ames	U200BR10	3/4	VD	########	########	N	9	(vv),xx,ooo,hhhh,pppp	N	
DC	Ames	U200BR10	3/4	VU	########	########	N	9	(vv),xx,ooo,hhhh,pppp	N	
DC	Apollo/Conbra	1/2DC	1/2								
DC	Apollo/Conbra	1/2DC	1/2								
DC	Apollo/Conbra	10DC	##								
DC	Apollo/Conbra	10DC	##								
DC	Apollo/Conbra	2 1/2DC	####	H	########	########	N	9	(ll),mm	Y	
DC	Apollo/Conbra	2 1/2DC	####	VU	########	########	N	9	(ll),mm	Y	
DC	Apollo/Conbra	2 1/2DC-7	####	H	########	########	N	9	(mm)[#1SOV], (qqq)[#2SOV]	Y	
DC	Apollo/Conbra	2 1/2DC-7	####	VU	########	########	N	9	(mm)[#1SOV], (qqq)[#2SOV]	Y	
DC	Apollo/Conbra	2 1/2DC8	####	H	########	########	N	9	(ppp),qqq	Y	
DC	Apollo/Conbra	2 1/2DC8	####	VU	########	########	N	9	(ppp),qqq	Y	
DC	Apollo/Conbra	2 1/2DCU	####	VUVU	########	########	N	9	(ll),mm	Y	
DC	Apollo/Conbra	2 1/2DCU	####	VUVU	########	########	N	9	(ll),mm	Y	
DC	Apollo/Conbra	3DC	#	H	########	########	N	9	(ll),mm	Y	
DC	Apollo/Conbra	3DC	#	VU	########	########	N	9	(ll),mm	Y	
DC	Apollo/Conbra	3DC7	#	H	########	########	N	9	(mm)[#1SOV], (qqq)[#2SOV]	Y	
DC	Apollo/Conbra	3DC7	#	VU	########	########	N	9	(mm)[#1SOV], (qqq)[#2SOV]	Y	
DC	Apollo/Conbra	3DC8	#	H	########	########	N	9	(ppp),qqq	Y	
DC	Apollo/Conbra	3DC8	#	VU	########	########	N	9	(ppp),qqq	Y	
DC	Apollo/Conbra	3DCU	#	VUVU	########	########	N	9	(ll),mm	Y	
DC	Apollo/Conbra	3DCU	#	VUVU	########	########	N	9	(ll),mm	Y	
DC	Apollo/Conbra	40-100-02	#	H	########	########	N	8	tt,bb,ee,ll	Y	
DC	Apollo/Conbra	40-100-03	#	H	########	########	N	8	uu,cc,mm	Y	
DC	Apollo/Conbra	40-100-05	#	H	########	########	N	8	mmm	Y	
DC	Apollo/Conbra	40-103-02	1/2	H	########	########	N	8	dd	Y	
DC	Apollo/Conbra	40-104-02	3/4	H	########	########	N	8	dd	Y	
DC	Apollo/Conbra	40-104-99T	3/4								
DC	Apollo/Conbra	40-104-A2	3/4	H	########	########	N	8	dd	Y	
DC	Apollo/Conbra	40-104-A2T	3/4	H	########	########	N	8	dd	Y	
DC	Apollo/Conbra	40-104-T2	3/4								
DC	Apollo/Conbra	40-104-TC2	3/4								
DC	Apollo/Conbra	40-105-02	#	H	########	########	N	8	dd	Y	
DC	Apollo/Conbra	40-105-99T	#								
DC	Apollo/Conbra	40-105-A2	#	H	########	########	N	8	dd	Y	
DC	Apollo/Conbra	40-105-A2T	#	H	########	########	N	8	dd	Y	
DC	Apollo/Conbra	40-105-T2	#								
DC	Apollo/Conbra	40-105-TC2	#								
DC	Apollo/Conbra	40-106-02	####	H	########	########	N	8	dd	Y	
DC	Apollo/Conbra	40-106-99T	####								
DC	Apollo/Conbra	40-106-A2	####	H	########	########	N	8	dd	Y	
DC	Apollo/Conbra	40-106-A2T	####	H	########	########	N	8	dd	Y	
DC	Apollo/Conbra	40-106-T2	####								
DC	Apollo/Conbra	40-107-02	####	H	########	########	N	8	dd	Y	
DC	Apollo/Conbra	40-107-99T	####								
DC	Apollo/Conbra	40-107-A2	####	H	########	########	N	8	dd	Y	
DC	Apollo/Conbra	40-107-A2T	####	H	########	########	N	8	dd	Y	
DC	Apollo/Conbra	40-107-T2	####								
DC	Apollo/Conbra	40-108-02	#	H	########	########	N	8	dd	Y	
DC	Apollo/Conbra	40-108-99T	#								
DC	Apollo/Conbra	40-108-A2	#	H	########	########	N	8	dd	Y	
DC	Apollo/Conbra	40-108-A2T	#	H	########	########	N	8	dd	Y	
DC	Apollo/Conbra	40-108-T2	#								
DC	Apollo/Conbra	40-109-02	####	H	########	########	N	8	tt,bb,ee,ll	Y	
DC	Apollo/Conbra	40-109-03	####	H	########	########	N	8	uu,cc,mm	Y	
DC	Apollo/Conbra	40-109-05	####	H	########	########	N	8	mmm	Y	
DC	Apollo/Conbra	40-10A-02	#	H	########	########	N	8	tt,bb,ee,ll	Y	
DC	Apollo/Conbra	40-10A-03	#	H	########	########	N	8	uu,cc,mm	Y	
DC	Apollo/Conbra	40-10A-05	#	H	########	########	N	8	mmm	Y	
DC	Apollo/Conbra	40-10A-06	#	H	########	########	N	8	mm[#1SOV], nnn[#2SOV]	Y	
DC	Apollo/Conbra	40-10C-02	#	H	########	########	N	8	tt,bb,ee,ll	Y	
DC	Apollo/Conbra	40-10C-03	#	H	########	########	N	8	uu,cc,mm	Y	
DC	Apollo/Conbra	40-10C-05	#	H	########	########	N	8	mmm	Y	
DC	Apollo/Conbra	40-10C-06	#	H	########	########	N	8	mm[#1SOV], nnn[#2SOV]	Y	
DC	Apollo/Conbra	40-10E-02	#	H	########	########	N	8	tt,bb,ee,ll	Y	
DC	Apollo/Conbra	40-10E-03	#	H	########	########	N	8	uu,cc,mm	Y	
DC	Apollo/Conbra	40-10E-06	#	H	########	########	N	8	mm[#1SOV], nnn[#2SOV]	Y	
DC	Apollo/Conbra	40-10G-02	##	H	########	########	N	8	tt,bb,ee,ll	Y	
DC	Apollo/Conbra	40-10G-03	##	H	########	########	N	8	uu,cc,mm	Y	
DC	Apollo/Conbra	40-10G-06	##	H	########	########	N	8	mm[#1SOV], nnn[#2SOV]	Y	
DC	Apollo/Conbra	4D-100	####	H	########	########	N	9	(yyy), cccc, dddd	Y	
DC	Apollo/Conbra	4D-100	####	VU	########	########	N	9	(yyy), cccc, dddd	Y	
DC	Apollo/Conbra	4D-100	#	H	########	########	N	9	(yyy), cccc, dddd	Y	
DC	Apollo/Conbra	4D-100	#	VU	########	########	N	9	(yyy), cccc, dddd	Y	
DC	Apollo/Conbra	4D-100	#	H	########	########	N	9	(yyy), cccc, dddd	Y	
DC	Apollo/Conbra	4D-100	#	VU	########	########	N	9	(yyy), cccc, dddd	Y	
DC	Apollo/Conbra	4D-100U	####	VUVU	########	########	N	9	(yyy), cccc, dddd	Y	
DC	Apollo/Conbra	4D-100U	#	VUVU	########	########	N	9	(yyy), cccc, dddd	Y	
DC	Apollo/Conbra	4D-100U	#	VUVU	########	########	N	9	(yyy), cccc, dddd	Y	
DC	Apollo/Conbra	4DC	#	H	########	########	N	9	(ll),mm	Y	
DC	Apollo/Conbra	4DC	#	VU	########	########	N	9	(ll),mm	Y	
DC	Apollo/Conbra	4DC7	#	H	########	########	N	9	(mm)[#1SOV], (qqq)[#2SOV]	Y	
DC	Apollo/Conbra	4DC7	#	VU	########	########	N	9	(mm)[#1SOV], (qqq)[#2SOV]	Y	
DC	Apollo/Conbra	4DC8	#	H	########	########	N	9	(ppp),qqq	Y	
DC	Apollo/Conbra	4DC8	#	VU	########	########	N	9	(ppp),qqq	Y	
DC	Apollo/Conbra	4DCU	#	VUVU	########	########	N	9	(ll),mm	Y	
DC	Apollo/Conbra	4S103	1/2								
DC	Apollo/Conbra	4S103	1/2								
DC	Apollo/Conbra	4SG-100	####								
DC	Apollo/Conbra	4SG-100	####								
DC	Apollo/Conbra	4SG-100	#								
DC	Apollo/Conbra	4SG-100	#								
DC	Apollo/Conbra	4SG-100	#								
DC	Apollo/Conbra	4SG-100	#								
DC	Apollo/Conbra	4SG-100	#								
DC	Apollo/Conbra	4SG-100	#								
DC	Apollo/Conbra	4SG-100	#								
DC	Apollo/Conbra	4SG-100	#								
DC	Apollo/Conbra	4SG-100U	####								

Type	Manufacturer	Model	Size	Orientation(s)	Approved	Renewed	≤0.25% Pb	Manual	Shutoffs	Spare Parts	Bypass
DC	Apollo/Conbra	4SG-100U	#								
DC	Apollo/Conbra	4SG-100U	#								
DC	Apollo/Conbra	4SG-100U	#								
DC	Apollo/Conbra	4SG-100U	#								
DC	Apollo/Conbra	6DC	#	H	########	########	N	9	(ll),mm	Y	
DC	Apollo/Conbra	6DC	#	VU	########	########	N	9	(ll),mm	Y	
DC	Apollo/Conbra	6DC7	#	H	########	########	N	9	(mm)[#1SOV], (qqq)[#2SOV]	Y	
DC	Apollo/Conbra	6DC7	#	VU	########	########	N	9	(mm)[#1SOV], (qqq)[#2SOV]	Y	
DC	Apollo/Conbra	6DC8	#	H	########	########	N	9	(ppp),qqq	Y	
DC	Apollo/Conbra	6DC8	#	VU	########	########	N	9	(ppp),qqq	Y	
DC	Apollo/Conbra	6DCU	#	VUVU	########	########	N	9	(ll),mm	Y	
DC	Apollo/Conbra	8DC	#	H	########	########	N	9	(mm),ll	Y	
DC	Apollo/Conbra	8DC	#	VU	########	########	N	9	(mm),ll	Y	
DC	Apollo/Conbra	8DC8	#	H	########	########	N	9	(ppp),qqq	Y	
DC	Apollo/Conbra	8DC8	#	VU	########	########	N	9	(ppp),qqq	Y	
DC	Apollo/Conbra	DC40	3/4	H	########	########	N	8	(dd)	Y	
DC	Apollo/Conbra	DC40	#	H	########	########	N	8	(dd)	Y	
DC	Apollo/Conbra	DC40	####	H	########	########	N	8	(dd)	Y	
DC	Apollo/Conbra	DC40	####	H	########	########	N	8	(dd)	Y	
DC	Apollo/Conbra	DC40	#	H	########	########	N	8	(dd)	Y	
DC	Apollo/Conbra	DC4A	1/2	H	########	########	N	9	(iiiii),sssss	N	
DC	Apollo/Conbra	DC4A	1/2	VU	########	########	N	9	(iiiii),sssss	N	
DC	Apollo/Conbra	DC4A	3/4	H	########	########	N	9	(iiiii),sssss	N	
DC	Apollo/Conbra	DC4A	3/4	VU	########	########	N	9	(iiiii),sssss	N	
DC	Apollo/Conbra	DC4A	#	H	########	########	N	9	(iiiii),sssss,wwwww	N	
DC	Apollo/Conbra	DC4A	#	VU	########	########	N	9	(iiiii),sssss,wwwww	N	
DC	Apollo/Conbra	DC4A	####	H	########	########	N	9	(iiiii),sssss,wwwww	N	
DC	Apollo/Conbra	DC4A	####	VU	########	########	N	9	(iiiii),sssss,wwwww	N	
DC	Apollo/Conbra	DC4A	####	H	########	########	N	9	(iiiii),sssss,wwwww	N	
DC	Apollo/Conbra	DC4A	####	VU	########	########	N	9	(iiiii),sssss,wwwww	N	
DC	Apollo/Conbra	DC4A	#	H	########	########	N	9	(iiiii),sssss,wwwww	N	
DC	Apollo/Conbra	DC4A	#	VU	########	########	N	9	(iiiii),sssss,wwwww	N	
DC	Apollo/Conbra	DC4S	1/2	H	########	########	N	9	(dd)	N	
DC	Apollo/Conbra	DC4S	1/2	VU	########	########	N	9	(dd)	N	
DC	Apollo/Conbra	DC4S	##	H	########	########	N	9	(mm),ll, xxxxx, zzzzz, bbbbbb, cccccc	N	
DC	Apollo/Conbra	DC4S	##	VU	########	########	N	9	(mm),ll, xxxxx, zzzzz, bbbbbb, cccccc	N	
DC	Apollo/Conbra	DC4SG	####	H	########	########	N	9	(yyy)ppp,qqq,ttt	N	
DC	Apollo/Conbra	DC4SG	####	VU	########	########	N	9	(yyy)ppp,qqq,ttt	N	
DC	Apollo/Conbra	DC4SG	#	H	########	########	N	9	(yyy)ppp,qqq,ttt	N	
DC	Apollo/Conbra	DC4SG	#	VU	########	########	N	9	(yyy)ppp,qqq,ttt	N	
DC	Apollo/Conbra	DC4SG	#	H	########	########	N	9	(yyy)ppp,qqq,ttt	N	
DC	Apollo/Conbra	DC4SG	#	VU	########	########	N	9	(yyy)ppp,qqq,ttt	N	
DC	Apollo/Conbra	DC4SG	#	H	########	########	N	9	(yyy)ppp,qqq,ttt	N	
DC	Apollo/Conbra	DC4SG	#	VU	########	########	N	9	(yyy)ppp,qqq,ttt	N	
DC	Apollo/Conbra	DC4SG	#	H	########	########	N	9	(yyy)ppp,qqq,ttt, xxxxx, yyyyy, zzzzz, aaaaaa	N	
DC	Apollo/Conbra	DC4SG	#	VU	########	########	N	9	(yyy)ppp,qqq,ttt, xxxxx, yyyyy, zzzzz, aaaaaa	N	
DC	Apollo/Conbra	DC4SGN	####	VUVU	########	########	N	9	(yyy)ppp,qqq,ttt	N	
DC	Apollo/Conbra	DC4SGN	#	VUVU	########	########	N	9	(yyy)ppp,qqq,ttt	N	
DC	Apollo/Conbra	DC4SGN	#	VUVU	########	########	N	9	(yyy)ppp,qqq,ttt	N	
DC	Apollo/Conbra	DC4SGN	#	VUVU	########	########	N	9	(yyy)ppp,qqq,ttt	N	
DC	Apollo/Conbra	DC4SGN	#	VUVU	########	########	N	9	(yyy)ppp,qqq,ttt	N	
DC	Apollo/Conbra	DCLF4A	1/2	H	########	########	Y	10	(jjjjj),ttttt, uuuuu	N	
DC	Apollo/Conbra	DCLF4A	1/2	VU	########	########	Y	10	(jjjjj),ttttt, uuuuu	N	
DC	Apollo/Conbra	DCLF4A	3/4	H	########	########	Y	9	(jjjjj),ttttt	N	
DC	Apollo/Conbra	DCLF4A	3/4	VU	########	########	Y	9	(jjjjj),ttttt	N	
DC	Apollo/Conbra	DCLF4A	#	H	########	########	Y	9	(jjjjj),ttttt,vvvvv	N	
DC	Apollo/Conbra	DCLF4A	#	VU	########	########	Y	9	(jjjjj),ttttt,vvvvv	N	
DC	Apollo/Conbra	DCLF4A	####	H	########	########	Y	9	(jjjjj),ttttt,vvvvv	N	
DC	Apollo/Conbra	DCLF4A	####	VU	########	########	Y	9	(jjjjj),ttttt,vvvvv	N	
DC	Apollo/Conbra	DCLF4A	####	H	########	########	Y	9	(jjjjj),ttttt,vvvvv	N	
DC	Apollo/Conbra	DCLF4A	####	VU	########	########	Y	9	(jjjjj),ttttt,vvvvv	N	
DC	Apollo/Conbra	DCLF4A	#	H	########	########	Y	9	(jjjjj),ttttt,vvvvv	N	
DC	Apollo/Conbra	DCLF4A	#	VU	########	########	Y	9	(jjjjj),ttttt,vvvvv	N	
DC	Apollo/Conbra	DCLF4A	####	H	########		Y	10	(yyy), cccc, dddd, mmmm, nnnn, xxxxx, yyyyy, zzzzz, aaaaaa	N	
DC	Apollo/Conbra	DCLF4A	####	VU	########		Y	10	(yyy), cccc, dddd, mmmm, nnnn, xxxxx, yyyyy, zzzzz, aaaaaa	N	
DC	Apollo/Conbra	DCLF4A	#	H	########		Y	10	(yyy), cccc, dddd, mmmm, nnnn, xxxxx, yyyyy, zzzzz, aaaaaa	N	
DC	Apollo/Conbra	DCLF4A	#	VU	########		Y	10	(yyy), cccc, dddd, mmmm, nnnn, xxxxx, yyyyy, zzzzz, aaaaaa	N	
DC	Apollo/Conbra	DCLF4A	#	H	########		Y	10	(yyy), cccc, dddd, mmmm, nnnn, xxxxx, yyyyy, zzzzz, aaaaaa	N	
DC	Apollo/Conbra	DCLF4A	#	VU	########		Y	10	(yyy), cccc, dddd, mmmm, nnnn, xxxxx, yyyyy, zzzzz, aaaaaa	N	
DC	Apollo/Conbra	DCLF4A	#	H	########		Y	10	(yyy), cccc, dddd, mmmm, nnnn, xxxxx, yyyyy, zzzzz, aaaaaa	N	
DC	Apollo/Conbra	DCLF4A	#	VU	########		Y	10	(yyy), cccc, dddd, mmmm, nnnn, xxxxx, yyyyy, zzzzz, aaaaaa	N	
DC	Apollo/Conbra	DCLF4A	#	H	########		Y	10	(yyy), cccc, dddd, mmmm, nnnn, xxxxx, yyyyy, zzzzz, aaaaaa	N	
DC	Apollo/Conbra	DCLF4A	#	VU	########		Y	10	(yyy), cccc, dddd, mmmm, nnnn, xxxxx, yyyyy, zzzzz, aaaaaa	N	
DC	Apollo/Conbra	DCLF4AN	####	VUVU	########		Y	10	(yyy), cccc, dddd, mmmm, nnnn, xxxxx, yyyyy, zzzzz, aaaaaa	N	
DC	Apollo/Conbra	DCLF4AN	#	VUVU	########		Y	10	(yyy), cccc, dddd, mmmm, nnnn, xxxxx, yyyyy, zzzzz, aaaaaa	N	
DC	Apollo/Conbra	DCLF4AN	#	VUVU	########		Y	10	(yyy), cccc, dddd, mmmm, nnnn, xxxxx, yyyyy, zzzzz, aaaaaa	N	
DC	Apollo/Conbra	DCLF4AN	#	VUVU	########		Y	10	(yyy), cccc, dddd, mmmm, nnnn, xxxxx, yyyyy, zzzzz, aaaaaa	N	
DC	Apollo/Conbra	DCLF4AN	#	VUVU	########		Y	10	(yyy), cccc, dddd, mmmm, nnnn, xxxxx, yyyyy, zzzzz, aaaaaa	N	
DC	Apollo/Conbra	DCLF4AR	####	H	########		N	10	(cccc), dddd, mmmm, nnnn, xxxxx, yyyyy, zzzzz, aaaaaa	N	
DC	Apollo/Conbra	DCLF4AR	####	VU	########		N	10	(cccc), dddd, mmmm, nnnn, xxxxx, yyyyy, zzzzz, aaaaaa	N	
DC	Apollo/Conbra	DCLF4AR	#	H	########		N	10	(cccc), dddd, mmmm, nnnn, xxxxx, yyyyy, zzzzz, aaaaaa	N	
DC	Apollo/Conbra	DCLF4AR	#	VU	########		N	10	(cccc), dddd, mmmm, nnnn, xxxxx, yyyyy, zzzzz, aaaaaa	N	
DC	Apollo/Conbra	DCLF4AR	#	H	########		N	10	(cccc), dddd, mmmm, nnnn, xxxxx, yyyyy, zzzzz, aaaaaa	N	
DC	Apollo/Conbra	DCLF4AR	4	VU	########		N	10	(cccc), dddd, mmmm, nnnn, xxxxx, yyyyy, zzzzz, aaaaaa	N	
DC	Apollo/Conbra	DCLF4AR	#	H	########		N	10	(cccc), dddd, mmmm, nnnn, xxxxx, yyyyy, zzzzz, aaaaaa	N	
DC	Apollo/Conbra	DCLF4AR	6	VU	########		N	10	(cccc), dddd, mmmm, nnnn, xxxxx, yyyyy, zzzzz, aaaaaa	N	
DC	Apollo/Conbra	DCLF4AR	#	H	########		N	10	(cccc), dddd, mmmm, nnnn, xxxxx, yyyyy, zzzzz, aaaaaa	N	
DC	Apollo/Conbra	DCLF4AR	#	VU	########		N	10	(cccc), dddd, mmmm, nnnn, xxxxx, yyyyy, zzzzz, aaaaaa	N	
DC	Apollo/Conbra	DCLF4SG	####	H	########		Y	9	(yyy), cccc, dddd, mmmm, nnnn, xxxxx, yyyyy, zzzzz, aaaaaa	N	
DC	Apollo/Conbra	DCLF4SG	####	VU	########		Y	9	(yyy), cccc, dddd, mmmm, nnnn, xxxxx, yyyyy, zzzzz, aaaaaa	N	
DC	Apollo/Conbra	DCLF4SG	#	H	########		Y	9	(yyy), cccc, dddd, mmmm, nnnn, xxxxx, yyyyy, zzzzz, aaaaaa	N	
DC	Apollo/Conbra	DCLF4SG	#	VU	########		Y	9	(yyy), cccc, dddd, mmmm, nnnn, xxxxx, yyyyy, zzzzz, aaaaaa	N	
DC	Apollo/Conbra	DCLF4SG	#	H	########		Y	9	(yyy), cccc, dddd, mmmm, nnnn, xxxxx, yyyyy, zzzzz, aaaaaa	N	
DC	Apollo/Conbra	DCLF4SG	#	VU	########		Y	9	(yyy), cccc, dddd, mmmm, nnnn, xxxxx, yyyyy, zzzzz, aaaaaa	N	
DC	Apollo/Conbra	DCLF4SG	#	H	########		Y	9	(yyy), cccc, dddd, mmmm, nnnn, xxxxx, yyyyy, zzzzz, aaaaaa	N	
DC	Apollo/Conbra	DCLF4SG	#	VU	########		Y	9	(yyy), cccc, dddd, mmmm, nnnn, xxxxx, yyyyy, zzzzz, aaaaaa	N	
DC	Apollo/Conbra	W432100	1/2	H	########	########	N	9	(dd)	N	
DC	Apollo/Conbra	W432100	1/2	VU	########	########	N	9	(dd)	N	
DC	ARI	DC 500	1/2	H	########	########	N	9	(ooooo), ii, ooo	N	
DC	ARI	DC 500	1/2	H	########		Y	9	(ooooo)	N	
DC	ARI	DC 500	3/4	H	########	########	N	9	(ii),ooo, ooooo	N	
DC	ARI	DC 500	3/4	H	########		Y	9	(ooooo)	N	
DC	ARI	DC 500	#	H	########	########	N	9	(ii),ooo, ooooo	N	
DC	ARI	DC 500	#	H	########		Y	9	(ooooo)	N	
DC	ARI	DC 500	####	H	########		Y	10	(ooooo)	N	
DC	ARI	DC 500	####	H	########		Y	10	(ooooo)	N	
DC	ARI	DC 500	#	H	########		Y	10	(ooooo)	N	
DC	Backflow Dire	Deringer 20	####	H	########		Y	10	(int)	N	
DC	Backflow Dire	Deringer 20	####	VU	########		Y	10	(int)	N	
DC	Backflow Dire	Deringer 20	#	H	########		Y	10	(int)	N	
DC	Backflow Dire	Deringer 20	#	VU	########		Y	10	(int)	N	
DC	Backflow Dire	Deringer 20	#	H	########		Y	10	(int)	N	
DC	Backflow Dire	Deringer 20	#	VU	########		Y	10	(int)	N	
DC	Cash Acme	DC 500	3/4	H	########	########	Y	9	(ii),ooo	N	
DC	Cash Acme	DC 500	#	H	########	########	Y	9	(ii),ooo	N	
DC	Cash Acme	DC100	3/4	H	########	########	N	8	(ii)	N	
DC	Cash Acme	DC100	#	H	########	########	N	8	(ii)	N	
DC	Cash Acme	DC100	####	H	########	########	N	8	(ii)	N	
DC	Cash Acme	DC100	#	H	########	########	N	8	(ii)	N	
DC	Cla-Val	D4	#	H	########	########	N	8	(gg),hh,qq,rr	Y	
DC	Cla-Val	D4	##	H	########	########	N	8	(gg),hh,qq,rr	Y	
DC	Conbraco						N				
DC	Febco	750	##	H	########	########	N	9	(ppp),qqq,aaaa,bbbb	N	
DC	Febco	750	##	H	########	########	Y	9	yyy,zzz,dddd,eeee,ffff,gggg,kkkk,llll,mmmm,nnnn	N	
DC	Febco	750	##	VU	########	########	N	9	(ppp),qqq,aaaa,bbbb	N	

Type	Manufacturer	Model	Size	Orientation(s)	Approved	Renewed	≤0.25% Pb	Manual	Shutoffs	Spare Parts	Bypass
DC	Febco	750	##	VU	########	########	Y	9	yyy,zzz,dddd,eeee,ffff,gggg,kkkk,llll,mmmm,nnnn	N	
DC	Febco	850	1/2	H	########	########	N	9	(fff),ooo	N	
DC	Febco	850	1/2	VD	########	########	N	9	(fff),ooo	N	
DC	Febco	850	1/2	VU	########	########	N	9	(fff),ooo	N	
DC	Febco	850	3/4	H	########	########	N	9	(fff),jjj,ooo	N	
DC	Febco	850	3/4	VD	########	########	N	9	(fff),jjj,ooo	N	
DC	Febco	850	3/4	VU	########	########	N	9	(fff),jjj,ooo	N	
DC	Febco	850	#	H	########	########	N	9	(fff),jjj,ooo	N	
DC	Febco	850	#	VD	########	########	N	9	(fff),jjj,ooo	N	
DC	Febco	850	#	VU	########	########	N	9	(fff),jjj,ooo	N	
DC	Febco	850	####	H	########	########	N	9	(fff),jjj,ooo	N	
DC	Febco	850	####	VD	########	########	N	9	(fff),jjj,ooo	N	
DC	Febco	850	####	VU	########	########	N	9	(fff),jjj,ooo	N	
DC	Febco	850	####	H	########	########	N	9	(fff),jjj,ooo	N	
DC	Febco	850	####	VD	########	########	N	9	(fff),jjj,ooo	N	
DC	Febco	850	####	VU	########	########	N	9	(fff),jjj,ooo	N	
DC	Febco	850	#	H	########	########	N	9	(fff),ooo	N	
DC	Febco	850	#	VD	########	########	N	9	(fff),ooo	N	
DC	Febco	850	#	VU	########	########	N	9	(fff),ooo	N	
DC	Febco	850	####	H	########	########	N	8	(ee),ff,ll,mm,oo,pp,tt,uu,zzz,cccc,ffff,gggg	Y	
DC	Febco	850	####	VU	########	########	N	8	(ee),ff,ll,mm,oo,pp,tt,uu,zzz,cccc,ffff,gggg	Y	
DC	Febco	850	#	H	########	########	N	8	(ee),ff,ll,mm,oo,pp,tt,uu,zzz,cccc,ffff,gggg	Y	
DC	Febco	850	#	VU	########	########	N	8	(ee),ff,ll,mm,oo,pp,tt,uu,zzz,cccc,ffff,gggg	Y	
DC	Febco	850	#	H	########	########	N	8	(ee),ff,ll,mm,oo,pp,tt,uu,nnn,zzz,cccc,ffff,gggg	Y	
DC	Febco	850	#	VU	########	########	N	8	(ee),ff,ll,mm,oo,pp,tt,uu,nnn,zzz,cccc,ffff,gggg	Y	
DC	Febco	850	#	H	########	########	N	8	(ee),ff,ll,mm,oo,pp,tt,uu,nnn,zzz,cccc,ffff,gggg	Y	
DC	Febco	850	#	VU	########	########	N	8	(ee),ff,ll,mm,oo,pp,tt,uu,nnn,zzz,cccc,ffff,gggg	Y	
DC	Febco	850	#	H	########	########	N	8	(ee),ff,ll,mm,oo,pp,tt,uu,nnn,zzz,cccc,ffff,gggg	Y	
DC	Febco	850	#	VU	########	########	N	8	(ee),ff,ll,mm,oo,pp,tt,uu,nnn,zzz,cccc,ffff,gggg	Y	
DC	Febco	857	####	H	########	########	N	8	(oo), gg, hh,ll, mm, pp, tt, uu, yy, fff	Y	
DC	Febco	857	####	VU	########	########	N	8	(oo), gg, hh,ll, mm, pp, tt, uu, yy, fff	Y	
DC	Febco	857	#	H	########	########	N	8	(oo), gg, hh,ll, mm, pp, tt, uu, yy, fff	Y	
DC	Febco	857	#	VU	########	########	N	8	(oo), gg, hh,ll, mm, pp, tt, uu, yy, fff	Y	
DC	Febco	870	####	VUVU	########	########	N	8	ee,ff,ll,mm,oo,pp,tt,uu,zzz,ffff,gggg	Y	
DC	Febco	870	#	VUVU	########	########	N	8	ee,ff,ll,mm,oo,pp,tt,uu,zzz,ffff,gggg	Y	
DC	Febco	870	#	VUVU	########	########	N	8	ee,ff,ll,mm,oo,pp,tt,uu,zzz,ffff,gggg	Y	
DC	Febco	870	#	VUVU	########	########	N	8	ee,ff,ll,mm,oo,pp,tt,uu,zzz,ffff,gggg	Y	
DC	Febco	870	#	VUVU	########	########	N	8	ee,ff,ll,mm,oo,pp,tt,uu,zzz,ffff,gggg	Y	
DC	Febco	870	##	VUVU	########	########	N	8	ee,ff,ll,mm,oo,pp,tt,uu,zzz,ffff,gggg	Y	
DC	Febco	750	####	H	########	########	N	9	(ppp),qqq	N	
DC	Febco	750	####	H	########	########	Y	9	yyy,zzz,dddd,eeee,gggg,kkkk,llll,mmmm,nnnn	N	
DC	Febco	750	####	VU	########	########	N	9	(ppp),qqq	N	
DC	Febco	750	####	VU	########	########	Y	9	yyy,zzz,dddd,eeee,dddd,gggg,kkkk,llll,mmmm,nnnn	N	
DC	Febco	750	#	H	########	########	N	9	(ppp),qqq	N	
DC	Febco	750	#	H	########	########	Y	9	yyy,zzz,dddd,eeee,dddd,gggg,kkkk,llll,mmmm,nnnn	N	
DC	Febco	750	#	VU	########	########	N	9	(ppp),qqq	N	
DC	Febco	750	#	VU	########	########	Y	9	yyy,zzz,dddd,eeee,dddd,gggg,kkkk,llll,mmmm,nnnn	N	
DC	Febco	750	#	H	########	########	N	9	(ppp),qqq	N	
DC	Febco	750	#	H	########	########	Y	9	yyy,zzz,dddd,eeee,dddd,gggg,kkkk,llll,mmmm,nnnn	N	
DC	Febco	750	#	VU	########	########	N	9	(ppp),qqq	N	
DC	Febco	750	#	VU	########	########	Y	9	yyy,zzz,dddd,eeee,dddd,gggg,kkkk,llll,mmmm,nnnn	N	
DC	Febco	750	#	H	########	########	N	9	(ppp),qqq,aaaa,bbbb	N	
DC	Febco	750	#	H	########	########	Y	9	zzz,dddd,eeee,ffff,gggg,kkkk,llll,mmmm,nnnn	N	
DC	Febco	750	#	VU	########	########	N	9	(ppp),qqq,aaaa,bbbb	N	
DC	Febco	750	#	VU	########	########	Y	9	zzz,dddd,eeee,ffff,gggg,kkkk,llll,mmmm,nnnn	N	
DC	Febco	750	#	H	########	########	N	9	(yyy),ppp,qqq,aaaa,bbbb	N	
DC	Febco	750	#	H	########	########	Y	9	(yyy),zzz,dddd,eeee,gggg,kkkk,llll,mmmm,nnnn	N	
DC	Febco	750	#	VU	########	########	N	9	(yyy),ppp,qqq,aaaa,bbbb	N	
DC	Febco	750	#	VU	########	########	Y	9	(yyy),zzz,dddd,eeee,gggg,kkkk,llll,mmmm,nnnn	N	
DC	Febco	750N	####	VUVU	########	########	N	9	(ppp),qqq	N	
DC	Febco	750N	####	VUVU	########	########	Y	9	zzz,dddd,eeee,dddd,gggg,kkkk,llll,mmmm,nnnn	N	
DC	Febco	750N	#	VUVU	########	########	N	9	(ppp),qqq	N	
DC	Febco	750N	#	VUVU	########	########	Y	9	zzz,dddd,eeee,dddd,gggg,kkkk,llll,mmmm,nnnn	N	
DC	Febco	750N	#	VUVU	########	########	N	9	(ppp),qqq	N	
DC	Febco	750N	#	VUVU	########	########	Y	9	zzz,dddd,eeee,dddd,gggg,kkkk,llll,mmmm,nnnn	N	
DC	Febco	750N	#	VUVU	########	########	N	9	(ppp),qqq	N	
DC	Febco	750N	#	VUVU	########	########	Y	9	zzz,dddd,eeee,dddd,gggg,kkkk,llll,mmmm,nnnn	N	
DC	Febco	805 Type YD	####								
DC	Febco	805 Type YD	#								
DC	Febco	805 Type YD	#								
DC	Febco	805 Type YD	#								
DC	Febco	805 Type YD	#								
DC	Febco	805 Type YD	##								
DC	Febco	805Y	3/4	H	########	########	N	6	ii,fff,jjj,ooo	Y	
DC	Febco	805Y	#	H	########	########	N	6	ii,fff,jjj,ooo	Y	
DC	Febco	805Y	####	H	########	########	N	6	ii,fff,jjj,ooo	Y	
DC	Febco	805Y	#	H	########	########	N	6	ii,fff,ooo	Y	
DC	Febco	805YB	3/4	H	########	########	N	8	(ii),fff,jjj,ooo	N	
DC	Febco	805YB	3/4	VU	########	########	N	8	(ii),fff,jjj,ooo	N	
DC	Febco	805YD	####	H	########	########	N	7	(ee),ff,ll,mm,oo,pp,tt,uu,zzz,ffff,gggg	Y	
DC	Febco	805YD	#	H	########	########	N	7	(ee),ff,ll,mm,oo,pp,tt,uu,zzz,ffff,gggg	Y	
DC	Febco	805YD	#	H	########	########	N	7	(ee),ff,ll,mm,oo,pp,tt,uu,zzz,ffff,gggg	Y	
DC	Febco	805YD	#	H	########	########	N	7	(ee),ff,ll,mm,oo,pp,tt,uu,zzz,ffff,gggg	Y	
DC	Febco	805YD	#	H	########	########	N	7	(ee),ff,ll,mm,oo,pp,tt,uu,zzz,ffff,gggg	Y	
DC	Febco	805YD	##	H	########	########	N	7	(ee),ff,ll,mm,oo,pp,tt,uu,zzz,ffff,gggg	Y	
DC	Febco	805YR	3/4	H	########	########	N	8	ii,fff,jjj,ooo	Y	
DC	Febco	805YR	#	H	########	########	N	8	ii,fff,jjj,ooo	Y	
DC	Febco	850F	3/4	H	########	########	N	9	fff,jjj	Y	
DC	Febco	850F	3/4	VD	########	########	N	9	(fff),jjj	N	
DC	Febco	850F	3/4	VU	########	########	N	9	(fff),jjj	N	
DC	Febco	850U	1/2	H	########	########	N	9	(kkk)	N	
DC	Febco	850U	1/2	VD	########	########	N	9	(kkk)	N	
DC	Febco	850U	1/2	VU	########	########	N	9	(kkk)	N	
DC	Febco	850U	3/4	H	########	########	N	9	(kkk)	N	
DC	Febco	850U	3/4	VD	########	########	N	9	(kkk)	N	
DC	Febco	850U	3/4	VU	########	########	N	9	(kkk)	N	
DC	Febco	850U	#	H	########	########	N	9	(kkk)	N	
DC	Febco	850U	#	VD	########	########	N	9	(kkk)	N	
DC	Febco	850U	#	VU	########	########	N	9	(kkk)	N	
DC	Febco	850U	####	H	########	########	N	9	(kkk)	N	
DC	Febco	850U	####	VD	########	########	N	9	(kkk)	N	
DC	Febco	850U	####	VU	########	########	N	9	(kkk)	N	
DC	Febco	850U	####	H	########	########	N	9	(kkk)	N	
DC	Febco	850U	####	VD	########	########	N	9	(kkk)	N	
DC	Febco	850U	####	VU	########	########	N	9	(kkk)	N	
DC	Febco	850U	#	H	########	########	N	9	(kkk)	N	
DC	Febco	850U	#	VD	########	########	N	9	(kkk)	N	
DC	Febco	850U	#	VU	########	########	N	9	(kkk)	N	
DC	Febco	870V	####	VUVU	########	########	N	8	(ee),ff,ll,mm,oo,pp,tt,uu,zzz,cccc,ffff,gggg	Y	
DC	Febco	870V	####	VUVU	########	########	N	8	(ee),ff,ll,mm,oo,pp,tt,uu,zzz,cccc,ffff,gggg	Y	
DC	Febco	870V	#	VUVU	########	########	N	8	(ee),ff,ll,mm,oo,pp,tt,uu,zzz,cccc,ffff,gggg	Y	
DC	Febco	870V	#	VUVU	########	########	N	8	(ee),ff,ll,mm,oo,pp,tt,uu,zzz,cccc,ffff,gggg	Y	
DC	Febco	870V	#	VUVU	########	########	N	8	(ee),ff,ll,mm,oo,pp,tt,uu,zzz,cccc,ffff,gggg	Y	
DC	Febco	870V	#	VUVU	########	########	N	8	(ee),ff,ll,mm,oo,pp,tt,uu,zzz,cccc,ffff,gggg	Y	
DC	Febco	870V	#	VUVU	########	########	N	8	(ee),ff,ll,mm,oo,pp,tt,uu,zzz,cccc,ffff,gggg	Y	
DC	Febco	870V	#	VUVU	########	########	N	8	(ee),ff,ll,mm,oo,pp,tt,uu,zzz,cccc,ffff,gggg	Y	
DC	Febco	870V	#	VUVU	########	########	N	8	(ee),ff,ll,mm,oo,pp,tt,uu,zzz,cccc,ffff,gggg	Y	
DC	Febco	870V	##	VUVU	########	########	N	8	(ee),ff,ll,mm,oo,pp,tt,uu,zzz,cccc,dddd,eeee,ffff,gggg,nnnnn	N	
DC	Febco	870V	##	VUVU	########	########	N	8	(ee),ff,ll,mm,oo,pp,tt,uu,zzz,cccc,dddd,eeee,ffff,gggg,nnnnn	N	
DC	Febco	LF850	1/2	H	########	########	Y	9	(qqqqq), hhhh	N	
DC	Febco	LF850	3/4	H	########	########	Y	9	(qqqqq), hhhh	N	
DC	Febco	LF850	#	H	########	########	Y	9	(qqqqq), hhhh	N	
DC	Febco	LF850	####	H	########	########	Y	9	(qqqqq), hhhh	N	
DC	Febco	LF850	####	H	########	########	Y	9	(qqqqq), hhhh	N	

Type	Manufacturer	Model	Size	Orientation(s)	Approved	Renewed	≤0.25% Pb	Manual	Shutoffs	Spare Parts	Bypass
DC	Febco	LF850	#	H	########	########	Y	9	(qqqqq), hhhh	N	
DC	Febco	LF850	####	H	########	########	Y	9	(mm),ll,oo,pp,zzz,cccc,dddd,eeee,ffff,gggg,nnnnn	N	
DC	Febco	LF850	####	VU	########	########	Y	9	(mm),ll,oo,pp,zzz,cccc,dddd,eeee,ffff,gggg,nnnnn	N	
DC	Febco	LF850	#	H	########	########	Y	9	(mm),ll,oo,pp,zzz,cccc,dddd,eeee,ffff,gggg,nnnnn	N	
DC	Febco	LF850	#	VU	########	########	Y	9	(mm),ll,oo,pp,zzz,cccc,dddd,eeee,ffff,gggg,nnnnn	N	
DC	Febco	LF850	#	H	########	########	Y	9	(mm),ll,oo,pp,zzz,cccc,dddd,eeee,ffff,gggg,nnnnn	N	
DC	Febco	LF850	#	VU	########	########	Y	9	(mm),ll,oo,pp,zzz,cccc,dddd,eeee,ffff,gggg,nnnnn	N	
DC	Febco	LF850	#	H	########	########	Y	9	(mm),ll,oo,pp,zzz,cccc,dddd,eeee,ffff,gggg,nnnnn	N	
DC	Febco	LF850	#	VU	########	########	Y	9	(mm),ll,oo,pp,zzz,cccc,dddd,eeee,ffff,gggg,nnnnn	N	
DC	Febco	LF850	#	H	########	########	Y	9	(mm),ll,oo,pp,zzz,cccc,dddd,eeee,ffff,gggg,nnnnn	N	
DC	Febco	LF850	##	H	########		Y	9	(mm),ll,oo,pp,zzz,cccc,dddd,eeee,ffff,gggg,nnnnn	N	
DC	Febco	LF850	##	VU	########		Y	9	(mm),ll,oo,pp,zzz,cccc,dddd,eeee,ffff,gggg,nnnnn	N	
DC	Febco	LF850U	1/2	H	########		Y	9	(ppppp), hhhh	N	
DC	Febco	LF850U	3/4	H	########		Y	9	(ppppp), hhhh	N	
DC	Febco	LF850U	#	H	########		Y	9	(ppppp), hhhh	N	
DC	Febco	LF850U	####	H	########		Y	9	(ppppp), hhhh	N	
DC	Febco	LF850U	####	H	########		Y	9	(ppppp), hhhh	N	
DC	Febco	LF850U	#	H	########		Y	9	(ppppp), hhhh	N	
DC	Febco	LF870V	####	VUVU	########	########	Y	9	(mm),ll,oo,pp,zzz,cccc,dddd,eeee,ffff,gggg,nnnnn	N	
DC	Febco	LF870V	####	VUVU	########	########	Y	9	(mm),ll,oo,pp,zzz,cccc,dddd,eeee,ffff,gggg,nnnnn	N	
DC	Febco	LF870V	#	VUVU	########	########	Y	9	(mm),ll,oo,pp,zzz,cccc,dddd,eeee,ffff,gggg,nnnnn	N	
DC	Febco	LF870V	#	VUVU	########	########	Y	9	(mm),ll,oo,pp,zzz,cccc,dddd,eeee,ffff,gggg,nnnnn	N	
DC	Febco	LF870V	#	VUVU	########	########	Y	9	(mm),ll,oo,pp,zzz,cccc,dddd,eeee,ffff,gggg,nnnnn	N	
DC	Febco	LF870V	#	VUVU	########	########	Y	9	(mm),ll,oo,pp,zzz,cccc,dddd,eeee,ffff,gggg,nnnnn	N	
DC	Febco	LF870V	#	VUVU	########	########	Y	9	(mm),ll,oo,pp,zzz,cccc,dddd,eeee,ffff,gggg,nnnnn	N	
DC	Febco	LF870V	#	VUVU	########	########	Y	9	(mm),ll,oo,pp,zzz,cccc,dddd,eeee,ffff,gggg,nnnnn	N	
DC	Febco	LF870V	#	VUVU	########	########	Y	9	(mm),ll,oo,pp,zzz,cccc,dddd,eeee,ffff,gggg,nnnnn	N	
DC	Flomatic	DCV	3/4	H	########	########	N	8	ii	Y	
DC	Flomatic	DCV	#	H	########	########	N	8	ii	Y	
DC	Flomatic	DCV	####	H	########	########	N	8	ii	Y	
DC	Flomatic	DCV	#	H	########	########	N	8	ii	Y	
DC	Flomatic	DCV	####	H	########	########	N	8	(gg),hh,jj,kk,ll,mm,yy,zz,ccc,ddd	Y	
DC	Flomatic	DCV	#	H	########	########	N	8	(gg),hh,jj,kk,ll,mm,yy,zz,ccc,ddd	Y	
DC	Flomatic	DCV	#	H	########	########	N	9	(gg),hh,jj,kk,ll,mm,yy,zz,ccc,ddd,ddddd	Y	
DC	Flomatic	DCV	#	H	########	########	Y	9	ddddd	Y	
DC	Flomatic	DCV	#	H	########	########	N	9	(gg),hh,jj,kk,ll,mm,yy,zz,ccc,ddd,ddddd	Y	
DC	Flomatic	DCV	#	H	########	########	Y	9	ddddd	Y	
DC	Flomatic	DCV	#	H	########	########	N	9	(mm), hh, jj, kk, ll, gg, yy, zz, ccc, ddd	Y	
DC	Flomatic	DCVE	3/4	H	########	########	Y	8	(hhhhh)	Y	
DC	Flomatic	DCVE	#	H	########	########	Y	8	(hhhhh)	Y	
DC	Flomatic	DCVE	####	H	########	########	Y	8	(hhhhh)	Y	
DC	Flomatic	DCVE	#	H	########	########	Y	8	(hhhhh)	Y	
DC	Hersey	2	#	H	########	########	N	5	tt,bb,qq,iii,lll	Y	
DC	Hersey	2	#	H	########	########	N	5	tt,bb,qq,iii,lll	Y	
DC	Hersey	2	#	H	########	########	N	5	tt,bb,qq,iii,lll	Y	
DC	Hersey	2	#	H	########	########	N	6	tt,bb,qq,iii,lll	Y	
DC	Hersey	2	##	H	########	########	N	6	tt,bb,qq,iii,lll	Y	
DC	Neptune						N				
DC	Watts	709	#	VU	########	########	N	8	(oo),gg,hh,ll,mm,pp,tt,uu,ww,yy,eee,ffff,gggg	N	
DC	Watts	709	#	VU	########	########	N	8	(oo),gg,hh,ll,mm,pp,tt,uu,ww,yy,eee,ffff,gggg	N	
DC	Watts	709	#	VU	########	########	N	8	(oo),gg,hh,ll,mm,pp,tt,uu,ww,yy,eee,ffff,gggg	N	
DC	Watts	709	##	VU	########	########	N	8	(oo),gg,hh,ll,mm,pp,tt,uu,ww,yy,eee,ffff,gggg	N	
DC	Watts	757	####	H	########	########	N	9	(ppp),qqq,aaaa,bbbb	N	
DC	Watts	757	####	H	########	########	Y	9	yyy,zzz,dddd,eeee,gggg,kkkk,llll,mmmm,nnnn,nnnnn	N	
DC	Watts	757	####	VU	########	########	N	9	(ppp),qqq,aaaa,bbbb	N	
DC	Watts	757	####	VU	########	########	Y	9	yyy,zzz,dddd,eeee,gggg,kkkk,llll,mmmm,nnnn,nnnnn	N	
DC	Watts	757	#	H	########	########	N	9	(ppp),qqq,aaaa,bbbb	N	
DC	Watts	757	#	H	########	########	Y	9	yyy,zzz,dddd,eeee,gggg,kkkk,llll,mmmm,nnnn,nnnnn	N	
DC	Watts	757	#	VU	########	########	N	9	(ppp),qqq,aaaa,bbbb	N	
DC	Watts	757	#	VU	########	########	Y	9	yyy,zzz,dddd,eeee,gggg,kkkk,llll,mmmm,nnnn,nnnnn	N	
DC	Watts	757	#	H	########	########	N	9	(ppp),qqq,aaaa,bbbb	N	
DC	Watts	757	#	H	########	########	Y	9	yyy,zzz,dddd,eeee,gggg,kkkk,llll,mmmm,nnnn,nnnnn	N	
DC	Watts	757	#	H	########	########	N	9	(ppp),qqq,aaaa,bbbb	N	
DC	Watts	757	#	H	########	########	Y	9	yyy,zzz,dddd,eeee,gggg,kkkk,llll,mmmm,nnnn,nnnnn	N	
DC	Watts	757	#	VU	########	########	N	9	(ppp),qqq,aaaa,bbbb	N	
DC	Watts	757	#	VU	########	########	Y	9	yyy,zzz,dddd,eeee,gggg,kkkk,llll,mmmm,nnnn,nnnnn	N	
DC	Watts	757	#	H	########	########	N	9	(ppp),qqq,aaaa,bbbb	N	
DC	Watts	757	#	H	########	########	Y	9	yyy,zzz,dddd,eeee,gggg,kkkk,llll,mmmm,nnnn,nnnnn	N	
DC	Watts	757	#	H	########	########	N	9	(ppp),qqq,aaaa,bbbb	N	
DC	Watts	757	#	H	########	########	Y	9	yyy,zzz,dddd,eeee,gggg,kkkk,llll,mmmm,nnnn,nnnnn	N	
DC	Watts	757	#	VU	########	########	N	9	(ppp),qqq,aaaa,bbbb	N	
DC	Watts	757	#	VU	########	########	Y	9	yyy,zzz,dddd,eeee,gggg,kkkk,llll,mmmm,nnnn,nnnnn	N	
DC	Watts	757	##	H	########	########	N	9	(ppp),qqq,aaaa,bbbb	N	
DC	Watts	757	##	H	########	########	Y	9	yyy,zzz,dddd,eeee,gggg,kkkk,llll,mmmm,nnnn,nnnnn	N	
DC	Watts	757	##	VU	########	########	N	9	(ppp),qqq,aaaa,bbbb	N	
DC	Watts	757	##	VU	########	########	Y	9	yyy,zzz,dddd,eeee,gggg,kkkk,llll,mmmm,nnnn,nnnnn	N	
DC	Watts	767	####	H	########	########	N	9	(ppp),qqq,yyy,zzz,aaaa,bbbb,dddd,eeee,gggg,kkkk,llll,mmmm,nnnn,nnnnn	N	
DC	Watts	767	####	VU	########	########	N	9	(ppp),qqq,yyy,zzz,aaaa,bbbb,dddd,eeee,gggg,kkkk,llll,mmmm,nnnn,nnnnn	N	
DC	Watts	767	#	H	########	########	N	9	(ppp),qqq,yyy,zzz,aaaa,bbbb,dddd,eeee,gggg,kkkk,llll,mmmm,nnnn,nnnnn	N	
DC	Watts	767	#	VU	########	########	N	9	(ppp),qqq,yyy,zzz,aaaa,bbbb,dddd,eeee,gggg,kkkk,llll,mmmm,nnnn,nnnnn	N	
DC	Watts	767	#	H	########	########	N	9	(ppp),qqq,yyy,zzz,aaaa,bbbb,dddd,eeee,gggg,kkkk,llll,mmmm,nnnn,nnnnn	N	
DC	Watts	767	#	VU	########	########	N	9	(ppp),qqq,yyy,zzz,aaaa,bbbb,dddd,eeee,gggg,kkkk,llll,mmmm,nnnn,nnnnn	N	
DC	Watts	767	#	H	########	########	N	9	(yyy),ppp,qqq,zzz,aaaa,bbbb,dddd,eeee,gggg,kkkk,llll,mmmm,nnnn,nnnnn	N	
DC	Watts	767	#	VU	########	########	N	9	(yyy),ppp,qqq,zzz,aaaa,bbbb,dddd,eeee,gggg,kkkk,llll,mmmm,nnnn,nnnnn	N	
DC	Watts	767	#	H	########	########	N	9	(yyy), ppp, qqq,zzz, aaaa, bbbb, dddd, eeee, ffff, gggg,nnnnn	N	
DC	Watts	767	#	VU	########	########	N	9	(yyy), ppp, qqq,zzz, aaaa, bbbb, dddd, eeee, ffff, gggg,nnnnn	N	
DC	Watts	767	##	H	########	########	N	9	(ppp),qqq,yyy,zzz,aaaa,bbbb,dddd,eeee,gggg	N	
DC	Watts	767	##	VU	########	########	N	9	(ppp),qqq,yyy,zzz,aaaa,bbbb,dddd,eeee,gggg	N	
DC	Watts	774	#	H	########	########	N	8	(tt),ee,ff,gg,hh,pp,uu,ccc,ddd	N	
DC	Watts	774	#	H	########	########	Y	8	ll,mm,oo,ffff,gggg	N	
DC	Watts	774	##	H	########	########	Y	8	(ll),mm,ffff,gggg	N	
DC	Watts	774	##	H	########	########	N	9	hh,gg	N	
DC	Watts	774	##	H	########	########	N	9	(ll),mm	N	
DC	Watts	007	####	H	########	########	N	8	(oo),gg,hh,ll,mm,pp,tt,uu,yy,ffff,gggg	N	
DC	Watts	007	####	VU	########	########	Y	8	(oo),gg,hh,ll,mm,pp,tt,uu,yy,ffff,gggg	N	
DC	Watts	007	#	H	########	########	N	8	(oo),gg,hh,ll,mm,pp,tt,uu,yy,eee,ffff,gggg	N	
DC	Watts	007	#	VU	########	########	Y	8	(oo),gg,hh,ll,mm,pp,tt,uu,yy,eee,ffff,gggg	N	
DC	Watts	007M1-FP	#	H	########	########	Y	9	(eeeee)	N	
DC	Watts	007M1-FP	#	H	########	########	Y	9	(eeeee)	N	
DC	Watts	007M1PCQT	3/4	H	########	########	Y	8	(vv),xx,ooo,hhhh,pppp	N	
DC	Watts	007M1PCQT	#	H	########	########	Y	8	(vv),xx,ooo,hhhh,pppp	N	
DC	Watts	007M1PCQT	####	H	########	########	Y	8	vv,xx,ooo,hhhh,pppp	Y	
DC	Watts	007M1PCQT	#	H	########	########	N	8	(vv),xx,ooo,hhhh,pppp	N	
DC	Watts	007M1QT	3/4	H	########	########	N	8	vv,xx,ooo,hhhh,pppp	Y	
DC	Watts	007M1QT	#	H	########	########	N	9	(vv),xx,ooo,hhhh,pppp	N	
DC	Watts	007M1QT	#	H	########	########	N	8	(vv),xx,ooo,hhhh,pppp	N	
DC	Watts	007M1QT	#	VU	########	########	N	9	(vv),xx,ooo,hhhh,pppp	N	
DC	Watts	007M1QT	####	H	########	########	N	8	vv,xx,ooo,hhhh,pppp	Y	
DC	Watts	007M1QT	#	H	########	########	N	8	(vv),xx,ooo,hhhh,pppp	N	
DC	Watts	007M1QT	#	VU	########	########	N	8	(vv),xx,ooo,hhhh,pppp	N	
DC	Watts	007M2-FP	####	H	########	########	N	9	(eeeee)	N	
DC	Watts	007M2-FP	####	H	########	########	N	9	(eeeee)	N	
DC	Watts	007M2PCQT	####	H	########	########	N	8	(vv),xx,ooo,hhhh,pppp	N	
DC	Watts	007M2PCQT	####	VU	########	########	N	8	(vv),xx,ooo,hhhh,pppp	N	
DC	Watts	007M2PCQT	####	H	########	########	N	8	(vv),xx,ooo,hhhh,pppp	N	
DC	Watts	007M2QT	3/4	H	########	########	N	8	(vv),xx,ooo,hhhh,pppp	N	
DC	Watts	007M2QT	3/4	VU	########	########	N	8	(vv),xx,ooo,hhhh,pppp	N	
DC	Watts	007M2QT	####	H	########	########	N	8	(vv),xx,ooo,hhhh,pppp	N	
DC	Watts	007M2QT	####	VU	########	########	N	8	(vv),xx,ooo,hhhh,pppp	N	
DC	Watts	007M2QT	####	H	########	########	N	8	(vv),xx,ooo,hhhh,pppp	N	
DC	Watts	007M2QT	####	VU	########	########	N	8	(vv),xx,ooo,hhhh,pppp	N	
DC	Watts	007M3-FP	3/4	H	########	########	N	9	(eeeee)	N	
DC	Watts	007M3QT	3/4	H	########	########	N	9	(vv),xx,ooo,hhhh,pppp	N	

Type	Manufacturer	Model	Size	Orientation(s)	Approved	Renewed	≤0.25% Pb	Manual	Shutoffs	Spare Parts	Bypass
DC	Watts	007M3QT	3/4	VU	########	########	N	9	(vv),xx,ooo,hhhh,pppp	N	
DC	Watts	007PCQT	1/2	H	########	########	N	8	(vv),xx,ooo,hhhh,pppp	N	
DC	Watts	007PCQT	####	H	########	########	N	8	vv,xx,ooo,hhhh,pppp	Y	
DC	Watts	007PCQT	#	H	########	########	N	8	vv,xx,ooo,hhhh,pppp	Y	
DC	Watts	007QT	1/2	H	########	########	N	8	(vv),xx,ooo,hhhh,pppp,rrrrr	N	
DC	Watts	007QT	1/2	H	########	########	N	9	(vv),xx,ooo,hhhh,pppp,rrrrr	N	
DC	Watts	007QT	1/2	VU	########	########	N	8	pppp,rrrrr	N	
DC	Watts	007QT	1/2	VU	########	########	N	9	(vv),xx,pppp,rrrrr	N	
DC	Watts	007QT	3/4	H	########	########	N	7	pppp,rrrrr	Y	
DC	Watts	007QT	#	H	########	########	N	7	pppp,rrrrr	Y	
DC	Watts	007QT	####	H	########	########	N	7	pppp,rrrrr	Y	
DC	Watts	007QT	#	H	########	########	N	7	pppp,rrrrr	Y	
DC	Watts	007SSM1PCQT	3/4	H	########	########	N	8	vv,xx,ooo,hhhh,pppp	Y	
DC	Watts	007SSM1PCQT	#	H	########	########	N	8	vv,xx,ooo,hhhh,pppp	Y	
DC	Watts	007SSM1QT	3/4	H	########	########	N	8	vv,xx,ooo,hhhh,pppp	Y	
DC	Watts	007SSM1QT	#	H	########	########	N	8	vv,xx,ooo,hhhh,pppp	Y	
DC	Watts	007SSPCQT	####	H	########	########	N	8	vv,xx,ooo,hhhh,pppp	Y	
DC	Watts	007SSPCQT	#	H	########	########	N	8	vv,xx,ooo,hhhh,pppp	Y	
DC	Watts	007SSQT	3/4	H	########	########	N	7	pppp	Y	
DC	Watts	007SSQT	#	H	########	########	N	7	pppp	Y	
DC	Watts	007SSQT	####	H	########	########	N	7	pppp	Y	
DC	Watts	007SSQT	#	H	########	########	N	7	pppp	Y	
DC	Watts	700	####	H	########	########	N	5		Y	
DC	Watts	700	#	H	########	########	N	5		Y	
DC	Watts	709	####	H	########	########	N	7	(oo),gg,hh,ll,mm,pp,tt,uu,ww,yy,ffff,gggg	N	
DC	Watts	709	#	H	########	########	N	7	(oo),gg,hh,ll,mm,pp,tt,uu,ww,yy,eee,ffff,gggg	N	
DC	Watts	709	#	H	########	########	N	6	(oo),gg,hh,ll,mm,pp,tt,uu,ww,yy,eee,ffff,gggg	N	
DC	Watts	709	#	H	########	########	N	6	(oo),gg,hh,ll,mm,pp,tt,uu,ww,yy,eee,ffff,gggg	N	
DC	Watts	709	#	H	########	########	N	6	(oo),gg,hh,ll,mm,pp,tt,uu,ww,yy,eee,ffff,gggg	N	
DC	Watts	709	##	H	########	########	N	6	(oo),gg,hh,ll,mm,pp,tt,uu,ww,yy,eee,ffff,gggg	N	
DC	Watts	709BB	####	H	########	########	N	6	(oo),gg,hh,ll,mm,pp,tt,uu,yy,ffff,gggg	N	
DC	Watts	709BB	#	H	########	########	N	6	(oo),gg,hh,ll,mm,pp,tt,uu,yy,ffff,gggg	N	
DC	Watts	709QT	3/4	H	########	########	N	6	vv,xx,ooo,hhhh,pppp	Y	
DC	Watts	709QT	#	H	########	########	N	6	vv,xx,ooo,hhhh,pppp	Y	
DC	Watts	709QT	####	H	########	########	N	6	vv,xx,ooo,hhhh,pppp	Y	
DC	Watts	709QT	#	H	########	########	N	6	vv,xx,ooo,hhhh,pppp	Y	
DC	Watts	719AQT	1/2	VUVU	########	########	N	9	(vv),xx,ooo,hhhh,pppp,rrrrr	N	
DC	Watts	719AQT	#	VUVU	########	########	N	9	(vv),xx,ooo,hhhh,pppp,rrrrr	N	
DC	Watts	719AQT	####	VUVU	########	########	N	9	(vv),xx,ooo,hhhh,pppp,rrrrr	N	
DC	Watts	719AQT	####	VUVU	########	########	N	9	(vv),xx,ooo,hhhh,pppp,rrrrr	N	
DC	Watts	719AQT	#	VUVU	########	########	N	9	(vv),xx,ooo,hhhh,pppp,rrrrr	N	
DC	Watts	719AQTR10	1/2	VUVU	########		N	9	(vv),xx,ooo,hhhh,pppp	N	
DC	Watts	719AQTR10	3/4	VUVU	########		N	9	(vv),xx,ooo,hhhh,pppp	N	
DC	Watts	719QT	1/2	H	########	########	N	9	(vv),xx,ooo,hhhh,pppp,rrrrr	N	
DC	Watts	719QT	1/2	VD	########	########	N	9	(vv),xx,ooo,hhhh,pppp,rrrrr	N	
DC	Watts	719QT	1/2	VU	########	########	N	9	(vv),xx,ooo,hhhh,pppp,rrrrr	N	
DC	Watts	719QT	3/4	H	########	########	N	9	(vv),xx,ooo,hhhh,pppp,rrrrr	N	
DC	Watts	719QT	3/4	VD	########	########	N	9	(vv),xx,ooo,hhhh,pppp,rrrrr	N	
DC	Watts	719QT	3/4	VU	########	########	N	9	(vv),xx,ooo,hhhh,pppp,rrrrr	N	
DC	Watts	719QT	#	H	########	########	N	9	(vv),xx,ooo,hhhh,pppp,rrrrr	N	
DC	Watts	719QT	#	VD	########	########	N	9	(vv),xx,ooo,hhhh,pppp,rrrrr	N	
DC	Watts	719QT	#	VU	########	########	N	9	(vv),xx,ooo,hhhh,pppp,rrrrr	N	
DC	Watts	719QT	####	H	########	########	N	9	(vv),xx,ooo,hhhh,pppp,rrrrr	N	
DC	Watts	719QT	####	VD	########	########	N	9	(vv),xx,ooo,hhhh,pppp,rrrrr	N	
DC	Watts	719QT	####	VU	########	########	N	9	(vv),xx,ooo,hhhh,pppp,rrrrr	N	
DC	Watts	719QT	####	H	########	########	N	9	(vv),xx,ooo,hhhh,pppp,rrrrr	N	
DC	Watts	719QT	####	VD	########	########	N	9	(vv),xx,ooo,hhhh,pppp,rrrrr	N	
DC	Watts	719QT	####	VU	########	########	N	9	(vv),xx,ooo,hhhh,pppp,rrrrr	N	
DC	Watts	719QT	#	H	########	########	N	9	(vv),xx,ooo,hhhh,pppp,rrrrr	N	
DC	Watts	719QT	#	VD	########	########	N	9	(vv),xx,ooo,hhhh,pppp,rrrrr	N	
DC	Watts	719QT	#	VU	########	########	N	9	(vv),xx,ooo,hhhh,pppp,rrrrr	N	
DC	Watts	719QTR10	1/2	H	########	########	N	9	(vv),xx,ooo,hhhh,pppp,rrrrrr	N	
DC	Watts	719QTR10	1/2	VD	########	########	N	9	(vv),xx,ooo,hhhh,pppp,rrrrrr	N	
DC	Watts	719QTR10	1/2	VU	########	########	N	9	(vv),xx,ooo,hhhh,pppp,rrrrrr	N	
DC	Watts	719QTR10	3/4	H	########	########	N	9	(vv),xx,ooo,hhhh,pppp,rrrrrr	N	
DC	Watts	719QTR10	3/4	VD	########	########	N	9	(vv),xx,ooo,hhhh,pppp,rrrrrr	N	
DC	Watts	719QTR10	3/4	VU	########	########	N	9	(vv),xx,ooo,hhhh,pppp,rrrrrr	N	
DC	Watts	757a	####	H	########	########	N	9	(ppp),qqq,yyy,zzz,aaaa,bbbb,dddd,eeee,gggg,kkkk,llll,mmmm,nnnn,nnnnn	N	
DC	Watts	757a	####	VU	########	########	N	9	(ppp),qqq,yyy,zzz,aaaa,bbbb,dddd,eeee,gggg,kkkk,llll,mmmm,nnnn,nnnnn	N	
DC	Watts	757a	#	H	########	########	N	9	(ppp),qqq,yyy,zzz,aaaa,bbbb,dddd,eeee,gggg,kkkk,llll,mmmm,nnnn,nnnnn	N	
DC	Watts	757a	#	VU	########	########	N	9	(ppp),qqq,yyy,zzz,aaaa,bbbb,dddd,eeee,gggg,kkkk,llll,mmmm,nnnn,nnnnn	N	
DC	Watts	757a	#	H	########	########	N	9	(ppp),qqq,yyy,zzz,aaaa,bbbb,dddd,eeee,gggg,kkkk,llll,mmmm,nnnn,nnnnn	N	
DC	Watts	757a	#	VU	########	########	N	9	(ppp),qqq,yyy,zzz,aaaa,bbbb,dddd,eeee,gggg,kkkk,llll,mmmm,nnnn,nnnnn	N	
DC	Watts	757a	#	H	########	########	N	9	(ppp),qqq,yyy,zzz,aaaa,bbbb,dddd,eeee,gggg,kkkk,llll,mmmm,nnnn,nnnnn	N	
DC	Watts	757a	#	VU	########	########	N	9	(ppp),qqq,yyy,zzz,aaaa,bbbb,dddd,eeee,gggg,kkkk,llll,mmmm,nnnn,nnnnn	N	
DC	Watts	757N	####	VUVU	########	########	N	9	(ppp),qqq,nnnnn	N	
DC	Watts	757N	####	VUVU	########	########	Y	9	yyy,zzz,dddd,eeee,dddd,gggg,kkkk,llll,mmmm,nnnn	N	
DC	Watts	757N	#	VUVU	########	########	N	9	(ppp),qqq,nnnnn	N	
DC	Watts	757N	#	VUVU	########	########	Y	9	yyy,zzz,dddd,eeee,dddd,gggg,kkkk,llll,mmmm,nnnn	N	
DC	Watts	757N	#	VUVU	########	########	N	9	(ppp),qqq,nnnnn	N	
DC	Watts	757N	#	VUVU	########	########	Y	9	yyy,zzz,dddd,eeee,dddd,gggg,kkkk,llll,mmmm,nnnn	N	
DC	Watts	757N	#	VUVU	########	########	N	9	(ppp),qqq,nnnnn	N	
DC	Watts	757N	#	VUVU	########	########	Y	9	yyy,zzz,dddd,eeee,dddd,gggg,kkkk,llll,mmmm,nnnn	N	
DC	Watts	757N	###	VUVU	########	########	N	9	ppp,qqq,aaaa,bbbb	N	
DC	Watts	757N	#	VUVU	########	########	Y	9	yyy, zzz,dddd,eeee,gggg,kkkk,llll,mmmm,nnnn	N	
DC	Watts	757N	##	VUVU	########	########	N	9	(ppp),qqq	N	
DC	Watts	757N	##	VUVU	########	########	Y	9	yyy,zzz,dddd,eeee,dddd,gggg,kkkk,llll,mmmm,nnnn	N	
DC	Watts	757Na	####	VUVU	########	########	N	9	(ppp),qqq,yyy,zzz,aaaa,bbbb,dddd,eeee,gggg,kkkk,llll,mmmm,nnnn,nnnnn	N	
DC	Watts	757Na	#	VUVU	########	########	N	9	(ppp),qqq,yyy,zzz,aaaa,bbbb,dddd,eeee,gggg,kkkk,llll,mmmm,nnnn,nnnnn	N	
DC	Watts	757Na	#	VUVU	########	########	N	9	(ppp),qqq,yyy,zzz,aaaa,bbbb,dddd,eeee,gggg,kkkk,llll,mmmm,nnnn,nnnnn	N	
DC	Watts	757Na	#	VUVU	########	########	N	9	(ppp),qqq,yyy,zzz,aaaa,bbbb,dddd,eeee,gggg,kkkk,llll,mmmm,nnnn,nnnnn	N	
DC	Watts	757NQT	####	VUVU	########	########	Y	9	ffffff	N	
DC	Watts	757NQT	#	VUVU	########	########	Y	9	ffffff	N	
DC	Watts	757NQT	#	VUVU	########	########	Y	9	ffffff	N	
DC	Watts	757QT	####	H	########	########	Y	9	ffffff	N	
DC	Watts	757QT	####	VU	########	########	Y	9	ffffff	N	
DC	Watts	757QT	#	H	########	########	Y	9	ffffff	N	
DC	Watts	757QT	#	VU	########	########	Y	9	ffffff	N	
DC	Watts	757QT	#	H	########	########	Y	9	ffffff	N	
DC	Watts	757QT	#	VU	########	########	Y	9	ffffff	N	
DC	Watts	767a	####	H	########	########	N	9	(ppp),qqq,yyy,zzz,aaaa,bbbb,dddd,eeee,gggg,kkkk,llll,mmmm,nnnn,nnnnn	N	
DC	Watts	767a	####	VU	########	########	N	9	(ppp),qqq,yyy,zzz,aaaa,bbbb,dddd,eeee,gggg,kkkk,llll,mmmm,nnnn,nnnnn	N	
DC	Watts	767a	#	H	########	########	N	9	(ppp),qqq,yyy,zzz,aaaa,bbbb,dddd,eeee,gggg,kkkk,llll,mmmm,nnnn,nnnnn	N	
DC	Watts	767a	#	VU	########	########	N	9	(ppp),qqq,yyy,zzz,aaaa,bbbb,dddd,eeee,gggg,kkkk,llll,mmmm,nnnn,nnnnn	N	
DC	Watts	767a	#	H	########	########	N	9	(ppp),qqq,yyy,zzz,aaaa,bbbb,dddd,eeee,gggg,kkkk,llll,mmmm,nnnn,nnnnn	N	
DC	Watts	767a	#	VU	########	########	N	9	(ppp),qqq,yyy,zzz,aaaa,bbbb,dddd,eeee,gggg,kkkk,llll,mmmm,nnnn,nnnnn	N	
DC	Watts	767N	####	VUVU	########	########	N	9	(ppp),qqq,yyy,zzz,dddd,eeee,dddd,gggg,kkkk,llll,mmmm,nnnn,nnnnn	N	
DC	Watts	767N	#	VUVU	########	########	N	9	(ppp),qqq,yyy,zzz,dddd,eeee,dddd,gggg,kkkk,llll,mmmm,nnnn,nnnnn	N	
DC	Watts	767N	#	VUVU	########	########	N	9	(ppp),qqq,yyy,zzz,dddd,eeee,dddd,gggg,kkkk,llll,mmmm,nnnn,nnnnn	N	
DC	Watts	767N	#	VUVU	########	########	N	9	ppp,qqq,aaaa,bbbb	N	
DC	Watts	767N	#	VUVU	########	########	Y	9	yyy,zzz,dddd,eeee,gggg,kkkk,llll,mmmm,nnnn	N	
DC	Watts	767N	#	VUVU	########	########	N	9	(ppp),qqq,yyy,zzz,dddd,eeee,dddd,gggg,kkkk,llll,mmmm,nnnn,nnnnn	N	
DC	Watts	767Na	####	VUVU	########	########	N	9	(ppp),qqq,yyy,zzz,aaaa,bbbb,dddd,eeee,gggg,kkkk,llll,mmmm,nnnn,nnnnn	N	
DC	Watts	767Na	#	VUVU	########	########	N	9	(ppp),qqq,yyy,zzz,aaaa,bbbb,dddd,eeee,gggg,kkkk,llll,mmmm,nnnn,nnnnn	N	
DC	Watts	767Na	#	VUVU	########	########	N	9	(ppp),qqq,yyy,zzz,aaaa,bbbb,dddd,eeee,gggg,kkkk,llll,mmmm,nnnn,nnnnn	N	
DC	Watts	770	#	H	########	########	N	8	oo,gg,hh,ll,mm,pp,tt,uu,yy	Y	
DC	Watts	770	#	H	########	########	N	8	oo,gg,hh,ll,mm,pp,tt,uu,yy	Y	
DC	Watts	770QTFDA	#	H	########	########	N	8	ww	Y	
DC	Watts	770QTFDA	#	H	########	########	N	8	ww	Y	
DC	Watts	772	#	H	########	########	N	8	oo,yy	Y	
DC	Watts	772	##	H	########	########	N	8	oo,yy	Y	
DC	Watts	774	####	H	########	########	N	8	(tt),ee,ff,gg,hh,pp,uu,ccc,ddd	N	
DC	Watts	774	####	H	########	########	Y	8	li,mm,oo,ffff,gggg	N	
DC	Watts	774	#	H	########	########	N	8	(tt),ee,ff,gg,hh,pp,uu,ccc,ddd	N	
DC	Watts	774	#	H	########	########	Y	8	li,mm,oo,ffff,gggg	N	

Type	Manufacturer	Model	Size	Orientation(s)	Approved	Renewed	≤0.25% Pb	Manual	Shutoffs	Spare Parts	Bypass
DC	Watts	774	#	H	########	########	N	8	(tt),ee,ff,gg,hh,pp,uu,ccc,ddd	N	
DC	Watts	774	#	H	########	########	Y	8	ll,mm,oo,ffff,gggg	N	
DC	Watts	774	#	H	########	########	N	8	(tt),ee,ff,gg,hh,pp,uu,ccc,ddd	N	
DC	Watts	774	#	H	########	########	Y	8	ll,mm,oo,ffff,gggg	N	
DC	Watts	774	##	VU	########	########	N	9	pp,	N	
DC	Watts	774	##	VU	########	########	Y	9	(ll),mm,oo	N	
DC	Watts	774X	####	H	########	########	N	8	(mm),ee,ff,gg,hh,ll,oo,pp,tt,uu,ccc,ddd,ffff,gggg	N	
DC	Watts	774X	#	H	########	########	N	8	tt,ee,ff,gg,hh,ll,mm,oo,pp,uu,ccc,ddd,ffff,gggg	Y	
DC	Watts	774X	#	H	########	########	N	8	tt,ee,ff,gg,hh,ll,mm,oo,pp,uu,ccc,ddd,ffff,gggg	Y	
DC	Watts	775QT	1/2	H	########	########	N	9	int	Y	
DC	Watts	775QT	1/2	VU	########	########	N	9	int	Y	
DC	Watts	775QT	3/4	H	########	########	N	9	int	Y	
DC	Watts	775QT	3/4	VU	########	########	N	9	int	Y	
DC	Watts	775QT	#	H	########	########	N	9	int	Y	
DC	Watts	775QT	#	VU	########	########	N	9	int	Y	
DC	Watts	775QT	####	H	########	########	N	9	int	Y	
DC	Watts	775QT	####	VU	########	########	N	9	int	Y	
DC	Watts	775QT	####	H	########	########	N	9	int	Y	
DC	Watts	775QT	####	VU	########	########	N	9	int	Y	
DC	Watts	775QT	#	H	########	########	N	9	int	Y	
DC	Watts	775QT	#	VU	########	########	N	9	int	Y	
DC	Watts	LF007	####	H	########	########	Y	9	(oo)	N	
DC	Watts	LF007	#	H	########	########	Y	9	(oo)	N	
DC	Watts	LF007M1PCQT	#	H	########		Y	9	(hhhh),rrrrr	N	
DC	Watts	LF007M1PCQT	#	VU	########		Y	9	(hhhh),rrrrr	N	
DC	Watts	LF007M1PCQT	#	H	########		Y	9	(hhhh),rrrrr	N	
DC	Watts	LF007M1PCQT	#	VU	########		Y	9	(hhhh),rrrrr	N	
DC	Watts	LF007M1QT	#	H	########	########	Y	9	(hhhh),rrrrr	N	
DC	Watts	LF007M1QT	#	VU	########	########	Y	9	(hhhh),rrrrr	N	
DC	Watts	LF007M1QT	#	H	########	########	Y	9	(hhhh),rrrrr	N	
DC	Watts	LF007M1QT	#	VU	########	########	Y	9	(hhhh),rrrrr	N	
DC	Watts	LF007M2QT	####	H	########	########	Y	8	(hhhh),rrrrr	N	
DC	Watts	LF007M2QT	####	VU	########	########	Y	8	(hhhh),rrrrr	N	
DC	Watts	LF007M2QT	####	H	########	########	Y	8	(hhhh),rrrrr	N	
DC	Watts	LF007M2QT	####	VU	########	########	Y	8	(hhhh),rrrrr	N	
DC	Watts	LF007M3PCQT	3/4	H	########		Y	9	(hhhh),rrrrr	N	
DC	Watts	LF007M3PCQT	3/4	VU	########		Y	9	(hhhh),rrrrr	N	
DC	Watts	LF007M3QT	3/4	H	########	########	Y	9	(hhhh),rrrrr	N	
DC	Watts	LF007M3QT	3/4	VU	########	########	Y	9	(hhhh),rrrrr	N	
DC	Watts	LF007PCQT	1/2	H	########		Y	9	(hhhh),rrrrr	N	
DC	Watts	LF007PCQT	1/2	VU	########		Y	9	(hhhh),rrrrr	N	
DC	Watts	LF007QT	1/2	H	########	########	Y	9	(hhhh),rrrrr	N	
DC	Watts	LF007QT	1/2	VU	########	########	Y	9	(hhhh),rrrrr	N	
DC	Watts	LF709	####	H	########	########	Y	9	(ll),mm,oo,pp,zzz,cccc,dddd,eeee,ffff,gggg,nnnnn	N	
DC	Watts	LF709	#	H	########	########	Y	9	(ll),mm,oo,pp,zzz,cccc,dddd,eeee,ffff,gggg,nnnnn	N	
DC	Watts	LF709	#	H	########	########	Y	9	(ll),mm,oo,pp,zzz,cccc,dddd,eeee,ffff,gggg,nnnnn	N	
DC	Watts	LF709	#	VU	########	########	Y	9	(ll),mm,oo,pp,zzz,cccc,dddd,eeee,ffff,gggg,nnnnn	N	
DC	Watts	LF709	#	H	########	########	Y	9	(ll),mm,oo,pp,zzz,cccc,dddd,eeee,ffff,gggg,nnnnn	N	
DC	Watts	LF709	#	VU	########	########	Y	9	(ll),mm,oo,pp,zzz,cccc,dddd,eeee,ffff,gggg,nnnnn	N	
DC	Watts	LF709	#	H	########	########	Y	9	(ll),mm,oo,pp,zzz,cccc,dddd,eeee,ffff,gggg,nnnnn	N	
DC	Watts	LF709	#	VU	########	########	Y	9	(ll),mm,oo,pp,zzz,cccc,dddd,eeee,ffff,gggg,nnnnn	N	
DC	Watts	LF709	##	H	########	########	Y	9	(ll),mm,oo,pp,zzz,cccc,dddd,eeee,ffff,gggg,nnnnn	N	
DC	Watts	LF709	##	VU	########	########	Y	9	(ll),mm,oo,pp,zzz,cccc,dddd,eeee,ffff,gggg,nnnnn	N	
DC	Watts	LF719AQT	#	VUVU	########	########	N	9	(vv),xx,ooo,pppp,rrrrr	N	
DC	Watts	LF719AQT	#	VUVU	########	########	Y	9	hhhh,rrrrr	N	
DC	Watts	LF719AQT	####	VUVU	########	########	N	9	(vv),xx,ooo,pppp,rrrrr	N	
DC	Watts	LF719AQT	####	VUVU	########	########	Y	9	hhhh,rrrrr	N	
DC	Watts	LF719AQT	####	VUVU	########	########	N	9	(vv),xx,ooo,pppp,rrrrr	N	
DC	Watts	LF719AQT	####	VUVU	########	########	Y	9	hhhh,rrrrr	N	
DC	Watts	LF719AQT	#	VUVU	########	########	N	9	(vv),xx,ooo,pppp,rrrrr	N	
DC	Watts	LF719AQT	#	VUVU	########	########	Y	9	hhhh,rrrrr	N	
DC	Watts	LF719QT	1/2	H	########		Y	9	(hhhh)	N	
DC	Watts	LF719QT	1/2	VD	########		Y	9	(hhhh)	N	
DC	Watts	LF719QT	1/2	VU	########		Y	9	(hhhh)	N	
DC	Watts	LF719QT	3/4	H	########		Y	9	(hhhh)	N	
DC	Watts	LF719QT	3/4	VD	########		Y	9	(hhhh)	N	
DC	Watts	LF719QT	3/4	VU	########		Y	9	(hhhh)	N	
DC	Watts	LF719QT	#	H	########	########	N	9	(vv),xx,ooo,pppp,rrrrr	N	
DC	Watts	LF719QT	#	H	########	########	Y	9	hhhh,rrrrr	N	
DC	Watts	LF719QT	#	VD	########	########	N	9	(vv),xx,ooo,pppp,rrrrr	N	
DC	Watts	LF719QT	#	VD	########	########	Y	9	hhhh,rrrrr	N	
DC	Watts	LF719QT	#	VU	########	########	N	9	(vv),xx,ooo,pppp,rrrrr	N	
DC	Watts	LF719QT	#	VU	########	########	Y	9	hhhh,rrrrr	N	
DC	Watts	LF719QT	####	H	########	########	N	9	(vv),xx,ooo,pppp,rrrrr	N	
DC	Watts	LF719QT	####	H	########	########	Y	9	hhhh,rrrrr	N	
DC	Watts	LF719QT	####	VD	########	########	N	9	(vv),xx,ooo,pppp,rrrrr	N	
DC	Watts	LF719QT	####	VD	########	########	Y	9	hhhh,rrrrr	N	
DC	Watts	LF719QT	####	VU	########	########	N	9	(vv),xx,ooo,pppp,rrrrr	N	
DC	Watts	LF719QT	####	VU	########	########	Y	9	hhhh,rrrrr	N	
DC	Watts	LF719QT	#	H	########	########	N	9	(vv),xx,ooo,pppp,rrrrr	N	
DC	Watts	LF719QT	#	H	########	########	Y	9	hhhh,rrrrr	N	
DC	Watts	LF719QT	#	VD	########	########	N	9	(vv),xx,ooo,pppp,rrrrr	N	
DC	Watts	LF719QT	#	VD	########	########	Y	9	hhhh,rrrrr	N	
DC	Watts	LF719QT	#	VU	########	########	N	9	(vv),xx,ooo,pppp,rrrrr	N	
DC	Watts	LF719QT	#	VU	########	########	Y	9	hhhh,rrrrr	N	
DC	Watts	LF719QTR10	1/2	H	########	########	N	9	(vv),xx,ooo,hhhh,pppp,rrrrr	N	
DC	Watts	LF719QTR10	1/2	VD	########	########	N	9	(vv),xx,ooo,hhhh,pppp,rrrrr	N	
DC	Watts	LF719QTR10	1/2	VU	########	########	N	9	(vv),xx,ooo,hhhh,pppp,rrrrr	N	
DC	Watts	LF719QTR10	3/4	H	########	########	N	9	(vv),xx,ooo,hhhh,pppp,rrrrr	N	
DC	Watts	LF719QTR10	3/4	VD	########	########	N	9	(vv),xx,ooo,hhhh,pppp,rrrrr	N	
DC	Watts	LF719QTR10	3/4	VU	########	########	N	9	(vv),xx,ooo,hhhh,pppp,rrrrr	N	
DC	Watts	LFU719QT	#	H	########	########	N	9	(vv),xx,ooo,pppp	N	
DC	Watts	LFU719QT	#	H	########	########	Y	9	hhhh	N	
DC	Watts	LFU719QT	#	VD	########	########	N	9	(vv),xx,ooo,pppp	N	
DC	Watts	LFU719QT	#	VD	########	########	Y	9	hhhh	N	
DC	Watts	LFU719QT	#	VU	########	########	N	9	(vv),xx,ooo,pppp	N	
DC	Watts	LFU719QT	#	VU	########	########	Y	9	hhhh	N	
DC	Watts	LFU719QT	####	H	########	########	N	9	(vv),xx,ooo,pppp	N	
DC	Watts	LFU719QT	####	H	########	########	Y	9	hhhh	N	
DC	Watts	LFU719QT	####	VD	########	########	N	9	(vv),xx,ooo,pppp	N	
DC	Watts	LFU719QT	####	VD	########	########	Y	9	hhhh	N	
DC	Watts	LFU719QT	####	VU	########	########	N	9	(vv),xx,ooo,pppp	N	
DC	Watts	LFU719QT	####	VU	########	########	Y	9	hhhh	N	
DC	Watts	LFU719QT	#	H	########	########	N	9	(vv),xx,ooo,pppp	N	
DC	Watts	LFU719QT	#	H	########	########	Y	9	hhhh	N	
DC	Watts	LFU719QT	#	VD	########	########	N	9	(vv),xx,ooo,pppp	N	
DC	Watts	LFU719QT	#	VD	########	########	Y	9	hhhh	N	
DC	Watts	LFU719QT	#	VU	########	########	N	9	(vv),xx,ooo,pppp	N	
DC	Watts	LFU719QT	#	VU	########	########	Y	9	hhhh	N	
DC	Watts	SS007M1QT	#	H	########	########	Y	9	(hhh)	N	
DC	Watts	SS007M1QT	#	VU	########	########	Y	9	(hhh)	N	
DC	Watts	SS007M3QT	1/2	H	########	########	Y	9	(hhh)	N	
DC	Watts	SS007M3QT	1/2	VU	########	########	Y	9	(hhh)	N	

Type	Manufacturer	Model	Size	Orientation(s)	Approved	Renewed	≤0.25% Pb	Manual	Shutoffs	Spare Parts	Bypass
DC	Watts	SS007M3QT	3/4	H	########	########	Y	9	(hhh)	N	
DC	Watts	SS007M3QT	3/4	VU	########	########	Y	9	(hhh)	N	
DC	Watts	U007M1APCQT	3/4	VDVU	########	########	N	8	(vv),xx,ooo,hhhh,pppp	N	
DC	Watts	U007M1APCQT	3/4	VDVU	########	########	N	8	(vv),xx,ooo,hhhh,pppp	N	
DC	Watts	U007M1APCQT	3/4	VUVU	########	########	N	8	(vv),xx,ooo,hhhh,pppp	N	
DC	Watts	U007M1APCQT	3/4	VUVU	########	########	N	8	(vv),xx,ooo,hhhh,pppp	N	
DC	Watts	U007M1APCQT	#	VDVU	########	########	N	8	(vv),xx,ooo,hhhh,pppp	N	
DC	Watts	U007M1APCQT	#	VDVU	########	########	N	8	(vv),xx,ooo,hhhh,pppp	N	
DC	Watts	U007M1APCQT	#	VUVU	########	########	N	8	(vv),xx,ooo,hhhh,pppp	N	
DC	Watts	U007M1APCQT	#	VUVU	########	########	N	8	(vv),xx,ooo,hhhh,pppp	N	
DC	Watts	U007M1AQT	3/4	VDVU	########	########	N	8	(vv),xx,ooo,hhhh,pppp	N	
DC	Watts	U007M1AQT	3/4	VDVU	########	########	N	8	(vv),xx,ooo,hhhh,pppp	N	
DC	Watts	U007M1AQT	3/4	VUVU	########	########	N	8	(vv),xx,ooo,hhhh,pppp	N	
DC	Watts	U007M1AQT	3/4	VUVU	########	########	N	8	(vv),xx,ooo,hhhh,pppp	N	
DC	Watts	U007M1AQT	#	VDVU	########	########	N	8	(vv),xx,ooo,hhhh,pppp	N	
DC	Watts	U007M1AQT	#	VDVU	########	########	N	8	(vv),xx,ooo,hhhh,pppp	N	
DC	Watts	U007M1AQT	#	VUVU	########	########	N	8	(vv),xx,ooo,hhhh,pppp	N	
DC	Watts	U007M1AQT	#	VUVU	########	########	N	8	(vv),xx,ooo,hhhh,pppp	N	
DC	Watts	U007M1PCQT	3/4	H	########	########	N	8	(vv),xx,ooo,hhhh,pppp	N	
DC	Watts	U007M1PCQT	#	H	########	########	N	8	(vv),xx,ooo,hhhh,pppp	N	
DC	Watts	U007M1PCQT	####	H	########	########	N	8	(vv),xx,ooo,hhhh,pppp	N	
DC	Watts	U007M1PCQT	#	H	########	########	N	8	(vv),xx,ooo,hhhh,pppp	N	
DC	Watts	U007M1QT	3/4	H	########	########	N	8	(vv),xx,ooo,hhhh,pppp	N	
DC	Watts	U007M1QT	#	H	########	########	N	8	(vv),xx,ooo,hhhh,pppp	N	
DC	Watts	U007M1QT	####	H	########	########	N	8	vv,xx,ooo,hhhh,pppp	Y	
DC	Watts	U007M1QT	#	H	########	########	N	8	(vv),xx,ooo,hhhh,pppp	N	
DC	Watts	U007M2AQT	####	VDVU	########	########	N	8	(vv),xx,ooo,hhhh,pppp	N	
DC	Watts	U007M2AQT	####	VDVU	########	########	N	8	(vv),xx,ooo,hhhh,pppp	N	
DC	Watts	U007M2AQT	####	VUVU	########	########	N	8	(vv),xx,ooo,hhhh,pppp	N	
DC	Watts	U007M2AQT	####	VUVU	########	########	N	8	(vv),xx,ooo,hhhh,pppp	N	
DC	Watts	U007M2QT	####	H	########	########	N	8	(vv),xx,ooo,hhhh,pppp	N	
DC	Watts	U007M2QT	####	H	########	########	N	8	(vv),xx,ooo,hhhh,pppp	N	
DC	Watts	U007PCQT	3/4	H	########	########	N	8	vv,xx,ooo,hhhh,pppp	Y	
DC	Watts	U007PCQT	#	H	########	########	N	8	vv,xx,ooo,hhhh,pppp	Y	
DC	Watts	U007PCQT	####	H	########	########	N	8	vv,xx,ooo,hhhh,pppp	Y	
DC	Watts	U007PCQT	#	H	########	########	N	8	vv,xx,ooo,hhhh,pppp	Y	
DC	Watts	U007QT	1/2	H	########	########	N	9	(vv),xx,ooo,hhhh,pppp	N	
DC	Watts	U007QT	1/2	VU	########	########	N	9	(vv),xx,ooo,hhhh,pppp	N	
DC	Watts	U007QT	3/4	H	########	########	N	7	vv,xx,ooo,hhhh,pppp	Y	
DC	Watts	U007QT	#	H	########	########	N	7	vv,xx,ooo,hhhh,pppp	Y	
DC	Watts	U007QT	####	H	########	########	N	7	vv,xx,ooo,hhhh,pppp	Y	
DC	Watts	U007QT	#	H	########	########	N	7	vv,xx,ooo,hhhh,pppp	Y	
DC	Watts	U007SSPCQT	3/4	H	########	########	N	8	vv,xx,pppp	Y	
DC	Watts	U007SSPCQT	#	H	########	########	N	8	vv,xx,pppp	Y	
DC	Watts	U007SSPCQT	####	H	########	########	N	8	vv,xx,pppp	Y	
DC	Watts	U007SSPCQT	#	H	########	########	N	8	vv,xx,pppp	Y	
DC	Watts	U007SSQT	3/4	H	########	########	N	7	vv,xx,pppp	Y	
DC	Watts	U007SSQT	#	H	########	########	N	7	vv,xx,pppp	Y	
DC	Watts	U007SSQT	####	H	########	########	N	7	vv,xx,pppp	Y	
DC	Watts	U007SSQT	#	H	########	########	N	7	vv,xx,pppp	Y	
DC	Watts	U719QT	1/2								
DC	Watts	U719QT	1/2								
DC	Watts	U719QT	1/2								
DC	Watts	U719QT	3/4								
DC	Watts	U719QT	3/4								
DC	Watts	U719QT	3/4								
DC	Watts	U719QT	#	H	########	########	N	9	(vv),xx,ooo,hhhh,pppp	N	
DC	Watts	U719QT	#	VD	########	########	N	9	(vv),xx,ooo,hhhh,pppp	N	
DC	Watts	U719QT	#	VU	########	########	N	9	(vv),xx,ooo,hhhh,pppp	N	
DC	Watts	U719QT	####	H	########	########	N	9	(vv),xx,ooo,hhhh,pppp	N	
DC	Watts	U719QT	####	VD	########	########	N	9	(vv),xx,ooo,hhhh,pppp	N	
DC	Watts	U719QT	####	VU	########	########	N	9	(vv),xx,ooo,hhhh,pppp	N	
DC	Watts	U719QT	####	H	########	########	N	9	(vv),xx,ooo,hhhh,pppp	N	
DC	Watts	U719QT	####	VD	########	########	N	9	(vv),xx,ooo,hhhh,pppp	N	
DC	Watts	U719QT	####	VU	########	########	N	9	(vv),xx,ooo,hhhh,pppp	N	
DC	Watts	U719QT	#	H	########	########	N	9	(vv),xx,ooo,hhhh,pppp	N	
DC	Watts	U719QT	#	VD	########	########	N	9	(vv),xx,ooo,hhhh,pppp	N	
DC	Watts	U719QT	#	VU	########	########	N	9	(vv),xx,ooo,hhhh,pppp	N	
DC	Watts	U719QTR10	1/2	H	########	########	N	9	(vv),xx,ooo,hhhh,pppp	N	
DC	Watts	U719QTR10	1/2	VD	########	########	N	9	(vv),xx,ooo,hhhh,pppp	N	
DC	Watts	U719QTR10	1/2	VU	########	########	N	9	(vv),xx,ooo,hhhh,pppp	N	
DC	Watts	U719QTR10	3/4	H	########	########	N	9	(vv),xx,ooo,hhhh,pppp	N	
DC	Watts	U719QTR10	3/4	VD	########	########	N	9	(vv),xx,ooo,hhhh,pppp	N	
DC	Watts	U719QTR10	3/4	VU	########	########	N	9	(vv),xx,ooo,hhhh,pppp	N	
DC	Wilkins	350	3/4	H	########	########	N	9	(ii),ooo	N	
DC	Wilkins	350	3/4	VU	########	########	N	9	(ii),ooo	N	
DC	Wilkins	350	#	H	########	########	N	9	(ii),ooo	N	
DC	Wilkins	350	#	VU	########	########	N	9	(ii),ooo	N	
DC	Wilkins	350	####	H	########	########	N	9	(int)	N	
DC	Wilkins	350	####	VU	########	########	N	9	(int)	N	
DC	Wilkins	350	####	H	########	########	N	9	(int)	N	
DC	Wilkins	350	####	VU	########	########	N	9	(int)	N	
DC	Wilkins	350	#	H	########	########	N	9	(int)	N	
DC	Wilkins	350	#	VU	########	########	N	9	(int)	N	
DC	Wilkins	350	####	H	########	########	N	9	(gg),ee,ff,hh,ll,mm,tt,uu,yy,zz,ppp,qqq,zzz,dddd,ssss,tttt,vvvv,wwww,yyyy,zzzz,kkkkk	N	
DC	Wilkins	350	####	H	########	########	Y	9	(gg),hh,ppp,qqq,ssss,tttt,vvvv,wwww,yyyy,zzzz,kkkkk	N	
DC	Wilkins	350	####	VU	########	########	Y	9	(gg),ee,ff,hh,ll,mm,tt,uu,yy,zz,ppp,qqq,zzz,dddd,ssss,tttt,vvvv,wwww,yyyy,zzzz,kkkkk	N	
DC	Wilkins	350	####	VU	########	########	N	9	(gg),hh,ppp,qqq,ssss,tttt,vvvv,wwww,yyyy,zzzz,kkkkk	N	
DC	Wilkins	350	#	H	########	########	N	9	(gg),ee,ff,hh,ll,mm,tt,uu,yy,zz,ppp,qqq,zzz,dddd,ssss,tttt,vvvv,wwww,yyyy,zzzz,kkkkk	N	
DC	Wilkins	350	#	H	########	########	Y	9	(gg),hh,ppp,qqq,ssss,tttt,vvvv,wwww,yyyy,zzzz,kkkkk	N	
DC	Wilkins	350	#	VU	########	########	Y	9	(gg),hh,ppp,qqq,ssss,tttt,vvvv,wwww,yyyy,zzzz,kkkkk	N	
DC	Wilkins	350	#	VU	########	########	N	9	(gg),ee,ff,hh,ll,mm,tt,uu,yy,zz,ppp,qqq,zzz,dddd,ssss,tttt,vvvv,wwww,yyyy,zzzz,kkkkk	N	
DC	Wilkins	350	#	H	########	########	Y	9	(gg),hh,ppp,qqq,vvv,www,ssss,tttt,vvvv,wwww,yyyy,zzzz,kkkkk	N	
DC	Wilkins	350	#	H	########	########	N	9	(gg),ee,ff,hh,ll,mm,tt,uu,yy,zz,ppp,qqq,vvv,www,zzz,dddd,eeee,ssss,tttt,vvvv,wwww,yy	N	
DC	Wilkins	350	#	VU	########	########	Y	9	(gg),hh,ppp,qqq,vvv,www,ssss,tttt,vvvv,wwww,yyyy,zzzz,kkkkk	N	
DC	Wilkins	350	#	VU	########	########	N	9	(gg),ee,ff,hh,ll,mm,tt,uu,yy,zz,ppp,qqq,vvv,www,zzz,dddd,eeee,ssss,tttt,vvvv,wwww,yy	N	
DC	Wilkins	350	#	H	########	########	Y	9	(gg),hh,ppp,qqq,vvv,www,ssss,tttt,vvvv,wwww,yyyy,zzzz,kkkkk	N	
DC	Wilkins	350	#	H	########	########	N	9	(gg),ee,ff,hh,ll,mm,tt,uu,yy,zz,ppp,qqq,vvv,www,zzz,dddd,eeee,ssss,tttt,vvvv,wwww,yy	N	
DC	Wilkins	350	#	VU	########	########	Y	9	(gg),hh,ppp,qqq,vvv,www,ssss,tttt,vvvv,wwww,yyyy,zzzz,kkkkk	N	
DC	Wilkins	350	#	VU	########	########	N	9	(gg),ee,ff,hh,ll,mm,tt,uu,yy,zz,ppp,qqq,vvv,www,zzz,dddd,eeee,ssss,tttt,vvvv,wwww,yy	N	
DC	Wilkins	350	##	H	########	########	Y	9	(gg),hh,ppp,qqq,vvv,www,ssss,tttt,vvvv,wwww,yyyy,zzzz,kkkkk	N	
DC	Wilkins	350	##	H	########	########	N	9	(gg),ee,ff,hh,ll,mm,tt,uu,yy,zz,ppp,qqq,vvv,www,zzz,dddd,eeee,ssss,tttt,vvvv,wwww,yy	N	
DC	Wilkins	350	##	VU	########	########	Y	9	(gg),hh,ppp,qqq,vvv,www,ssss,tttt,vvvv,wwww,yyyy,zzzz,kkkkk	N	
DC	Wilkins	350	##	VU	########	########	N	9	(gg),ee,ff,hh,ll,mm,tt,uu,yy,zz,ppp,qqq,vvv,www,zzz,dddd,eeee,ssss,tttt,vvvv,wwww,yy	N	
DC	Wilkins	350	##	H	########	########	Y	9	(hh),ssss,tttt,vvvv,wwww,yyyy,zzzz,kkkkk	N	
DC	Wilkins	350	##	H	########	########	N	9	(hh),ssss,tttt,vvvv,wwww,yyyy,zzzz,kkkkk	N	
DC	Wilkins	450	####	VUVU	########	########	Y	9	(gg),ee,ff,hh,ll,mm,tt,uu,yy,zz,ppp,qqq,zzz,dddd,ssss,uuuu,vvvv,xxxx,yyyy,aaaaa,kkkk	N	
DC	Wilkins	450	####	VUVU	########	########	N	9	(gg),ee,ff,hh,ll,mm,tt,uu,yy,zz,ppp,qqq,zzz,dddd,ssss,uuuu,vvvv,xxxx,yyyy,aaaaa	N	
DC	Wilkins	450	#	VUVU	########	########	Y	9	(gg),hh,ppp,qqq,ssss,uuuu,vvvv,xxxx,yyyy,aaaaa,kkkkk,llll	N	
DC	Wilkins	450	#	VUVU	########	########	N	9	(gg),ee,ff,hh,ll,mm,tt,uu,yy,zz,ppp,qqq,zzz,dddd,ssss,uuuu,vvvv,xxxx,yyyy,aaaaa,kkkk	N	
DC	Wilkins	450	#	VUVU	########	########	Y	9	(ppp),qqq,sss,ttt,www,yyy,ssss,uuuu,vvvv,xxxx,yyyy,aaaaa,kkkkk,llll	N	
DC	Wilkins	450	#	VUVU	########	########	N	9	(ppp),qqq,sss,ttt,www,yyy,zzz,dddd,eeee,ssss,uuuu,vvvv,xxxx,yyyy,aaaaa,kkkkk,llll	N	
DC	Wilkins	450	#	VUVU	########	########	Y	9	(ppp),qqq,sss,ttt,www,yyy,ssss,uuuu,vvvv,xxxx,yyyy,aaaaa,kkkkk,llll	N	
DC	Wilkins	450	#	VUVU	########	########	N	9	(ppp),qqq,sss,ttt,www,yyy,zzz,dddd,eeee,ssss,uuuu,vvvv,xxxx,yyyy,aaaaa,kkkkk,llll	N	
DC	Wilkins	450	#	VUVU	########	########	Y	9	(ppp),qqq,sss,ttt,www,yyy,ssss,uuuu,vvvv,xxxx,yyyy,aaaaa,kkkkk,llll	N	
DC	Wilkins	450	##	VUVU	########	########	Y	9	(ppp),qqq,sss,ttt,www,yyy,ssss,uuuu,vvvv,xxxx,yyyy,aaaaa,kkkkk,llll	N	
DC	Wilkins	450	##	VUVU	########	########	N	9	(ppp),qqq,sss,ttt,www,yyy,zzz,dddd,eeee,ssss,uuuu,vvvv,xxxx,yyyy,aaaaa,kkkkk,llll	N	
DC	Wilkins	950	#	VU	########	########	N	8	(ppp),qqq,sss,ttt,www,yyy,zzz,dddd,eeee,ssss,uuuu,vvvv,xxxx,yyyy,aaaaa	Y	
DC	Wilkins	950	#	VU	########	########	N	8	(gg),hh,ppp,qqq,ssss,uuuu,vvvv,xxxx,yyyy,aaaaa	Y	
DC	Wilkins	950	#	VU	########	########	N	8	(ppp),qqq,sss,ttt,www,yyy,ssss,uuuu,vvvv,xxxx,yyyy,aaaaa	N	

Type	Manufacturer	Model	Size	Orientation(s)	Approved	Renewed	≤0.25% Pb	Manual	Shutoffs	Spare Parts	Bypass
DC	Wilkins	950	##	H	########	########	N	8	(ppp),qqq,sss,ttt,www,yyy,ssss,uuuu,vvvv,xxxx,yyyy,aaaaa	N	
DC	Wilkins	350A	####	H	########	########	Y	9	(ppp),qqq,sss,ttt,yyy,ssss,uuuu,vvvv,xxxx,yyyy,aaaaa,kkkkk	N	
DC	Wilkins	350A	####	H	########	########	N	9	(ppp),sss,ttt,qqq,yyy,zzz,dddd,ssss,uuuu,vvvv,xxxx,yyyy,aaaaa,kkkkk,lllll	N	
DC	Wilkins	350A	####	VU	########	########	Y	9	(ppp),qqq,sss,ttt,yyy,ssss,uuuu,vvvv,xxxx,yyyy,aaaaa,kkkkk	N	
DC	Wilkins	350A	####	VU	########	########	N	9	(ppp),sss,ttt,qqq,yyy,zzz,dddd,ssss,uuuu,vvvv,xxxx,yyyy,aaaaa,kkkkk,lllll	N	
DC	Wilkins	350A	#	H	########	########	Y	9	(ppp),qqq,sss,ttt,yyy,ssss,uuuu,vvvv,xxxx,yyyy,aaaaa,kkkkk,lllll	N	
DC	Wilkins	350A	#	H	########	########	N	9	(ppp),sss,ttt,qqq,yyy,zzz,dddd,ssss,uuuu,vvvv,xxxx,yyyy,aaaaa,kkkkk,lllll	N	
DC	Wilkins	350A	#	VU	########	########	Y	9	(ppp),qqq,sss,ttt,yyy,ssss,uuuu,vvvv,xxxx,yyyy,aaaaa,kkkkk,lllll	N	
DC	Wilkins	350A	#	VU	########	########	N	9	(ppp),sss,ttt,qqq,yyy,zzz,dddd,ssss,uuuu,vvvv,xxxx,yyyy,aaaaa,kkkkk,lllll	N	
DC	Wilkins	350A	#	H	########	########	Y	9	(ppp),qqq,sss,ttt,yyy,ssss,uuuu,vvvv,xxxx,yyyy,aaaaa,kkkkk,lllll	N	
DC	Wilkins	350A	#	H	########	########	N	9	(ppp),qqq,sss,ttt,www,yyy,zzz,dddd,eeee,ssss,uuuu,vvvv,xxxx,yyyy,aaaaa,kkkkk,lllll	N	
DC	Wilkins	350A	#	VU	########	########	Y	9	(ppp),qqq,sss,ttt,yyy,ssss,uuuu,vvvv,xxxx,yyyy,aaaaa,kkkkk,lllll	N	
DC	Wilkins	350A	#	VU	########	########	N	9	(ppp),qqq,sss,ttt,www,yyy,zzz,dddd,eeee,ssss,uuuu,vvvv,xxxx,yyyy,aaaaa,kkkkk,lllll	N	
DC	Wilkins	350A	#	H	########	########	Y	9	(ppp),qqq,sss,ttt,yyy,ssss,uuuu,vvvv,xxxx,yyyy,aaaaa,kkkkk,lllll	N	
DC	Wilkins	350A	#	H	########	########	N	9	(ppp),qqq,sss,ttt,www,yyy,zzz,dddd,eeee,ssss,uuuu,vvvv,xxxx,yyyy,aaaaa,kkkkk,lllll	N	
DC	Wilkins	350A	#	VU	########	########	Y	9	(ppp),qqq,sss,ttt,yyy,ssss,uuuu,vvvv,xxxx,yyyy,aaaaa,kkkkk,lllll	N	
DC	Wilkins	350A	#	VU	########	########	N	9	(ppp),qqq,sss,ttt,www,yyy,zzz,dddd,eeee,ssss,uuuu,vvvv,xxxx,yyyy,aaaaa,kkkkk,lllll	N	
DC	Wilkins	350A	#	H	########	########	Y	9	(ppp),qqq,sss,ttt,yyy,ssss,uuuu,vvvv,xxxx,yyyy,aaaaa,kkkkk,lllll	N	
DC	Wilkins	350A	#	H	########	########	N	9	(ppp),qqq,sss,ttt,www,yyy,zzz,dddd,eeee,ssss,uuuu,vvvv,xxxx,yyyy,aaaaa,kkkkk,lllll	N	
DC	Wilkins	350A	#	VU	########	########	Y	9	(ppp),qqq,sss,ttt,yyy,ssss,uuuu,vvvv,xxxx,yyyy,aaaaa,kkkkk,lllll	N	
DC	Wilkins	350A	#	VU	########	########	N	9	(ppp),qqq,sss,ttt,www,yyy,zzz,dddd,eeee,ssss,uuuu,vvvv,xxxx,yyyy,aaaaa,kkkkk,lllll	N	
DC	Wilkins	350A	##	H	########	########	Y	9	(ppp),qqq,sss,ttt,yyy,ssss,uuuu,vvvv,xxxx,yyyy,aaaaa,kkkkk,lllll	N	
DC	Wilkins	350A	##	H	########	########	N	9	(ppp),qqq,sss,ttt,yyy,ssss,uuuu,vvvv,xxxx,yyyy,aaaaa,kkkkk,lllll	N	
DC	Wilkins	350A	##	VU	########	########	Y	9	(ppp),qqq,sss,ttt,yyy,ssss,uuuu,vvvv,xxxx,yyyy,aaaaa,kkkkk,lllll	N	
DC	Wilkins	350A	##	VU	########	########	N	9	(ppp),qqq,sss,ttt,yyy,ssss,uuuu,vvvv,xxxx,yyyy,aaaaa,kkkkk,lllll	N	
DC	Wilkins	350AR	####	H	########	########	N	9	(ppp),sss,ttt,qqq,yyy,zzz,dddd,ssss,uuuu,vvvv,xxxx,yyyy,aaaaa,kkkkk,lllll	N	
DC	Wilkins	350AR	####	H	########	########	Y	9	(ppp),sss,ttt,qqq,yyy,zzz,dddd,ssss,uuuu,vvvv,xxxx,yyyy,aaaaa,kkkkk,lllll	N	
DC	Wilkins	350AR	####	VU	########	########	N	9	(ppp),sss,ttt,qqq,yyy,zzz,dddd,ssss,uuuu,vvvv,xxxx,yyyy,aaaaa,kkkkk,lllll	N	
DC	Wilkins	350AR	####	VU	########	########	Y	9	(ppp),sss,ttt,qqq,yyy,zzz,dddd,ssss,uuuu,vvvv,xxxx,yyyy,aaaaa,kkkkk,lllll	N	
DC	Wilkins	350AR	#	H	########	########	N	9	(ppp),sss,ttt,qqq,yyy,zzz,dddd,ssss,uuuu,vvvv,xxxx,yyyy,aaaaa,kkkkk,lllll	N	
DC	Wilkins	350AR	#	H	########	########	Y	9	(ppp),sss,ttt,qqq,yyy,zzz,dddd,ssss,uuuu,vvvv,xxxx,yyyy,aaaaa,kkkkk,lllll	N	
DC	Wilkins	350AR	#	VU	########	########	N	9	(ppp),sss,ttt,qqq,yyy,zzz,dddd,ssss,uuuu,vvvv,xxxx,yyyy,aaaaa,kkkkk,lllll	N	
DC	Wilkins	350AR	#	VU	########	########	Y	9	(ppp),sss,ttt,qqq,yyy,zzz,dddd,ssss,uuuu,vvvv,xxxx,yyyy,aaaaa,kkkkk,lllll	N	
DC	Wilkins	350AR	#	H	########	########	Y	9	(ppp),qqq,sss,ttt,www,yyy,zzz,dddd,eeee,ssss,uuuu,vvvv,xxxx,yyyy,aaaaa,kkkkk,lllll	N	
DC	Wilkins	350AR	#	H	########	########	N	9	(ppp),qqq,sss,ttt,www,yyy,zzz,dddd,eeee,ssss,uuuu,vvvv,xxxx,yyyy,aaaaa,kkkkk,lllll	N	
DC	Wilkins	350AR	#	VU	########	########	Y	9	(ppp),qqq,sss,ttt,www,yyy,zzz,dddd,eeee,ssss,uuuu,vvvv,xxxx,yyyy,aaaaa,kkkkk,lllll	N	
DC	Wilkins	350AR	#	VU	########	########	N	9	(ppp),qqq,sss,ttt,www,yyy,zzz,dddd,eeee,ssss,uuuu,vvvv,xxxx,yyyy,aaaaa,kkkkk,lllll	N	
DC	Wilkins	350AR	#	H	########	########	Y	9	(ppp),qqq,sss,ttt,www,yyy,zzz,dddd,eeee,ssss,uuuu,vvvv,xxxx,yyyy,aaaaa,kkkkk,lllll	N	
DC	Wilkins	350AR	#	H	########	########	N	9	(ppp),qqq,sss,ttt,www,yyy,zzz,dddd,eeee,ssss,uuuu,vvvv,xxxx,yyyy,aaaaa,kkkkk,lllll	N	
DC	Wilkins	350AR	#	VU	########	########	Y	9	(ppp),qqq,sss,ttt,www,yyy,zzz,dddd,eeee,ssss,uuuu,vvvv,xxxx,yyyy,aaaaa,kkkkk,lllll	N	
DC	Wilkins	350AR	#	VU	########	########	N	9	(ppp),qqq,sss,ttt,www,yyy,zzz,dddd,eeee,ssss,uuuu,vvvv,xxxx,yyyy,aaaaa,kkkkk,lllll	N	
DC	Wilkins	350AR	#	H	########	########	Y	9	(ppp),qqq,sss,ttt,www,yyy,zzz,dddd,eeee,ssss,uuuu,vvvv,xxxx,yyyy,aaaaa,kkkkk,lllll	N	
DC	Wilkins	350AR	#	H	########	########	N	9	(ppp),qqq,sss,ttt,www,yyy,zzz,dddd,eeee,ssss,uuuu,vvvv,xxxx,yyyy,aaaaa,kkkkk,lllll	N	
DC	Wilkins	350AR	#	VU	########	########	Y	9	(ppp),qqq,sss,ttt,www,yyy,zzz,dddd,eeee,ssss,uuuu,vvvv,xxxx,yyyy,aaaaa,kkkkk,lllll	N	
DC	Wilkins	350AR	#	VU	########	########	N	9	(ppp),qqq,sss,ttt,www,yyy,zzz,dddd,eeee,ssss,uuuu,vvvv,xxxx,yyyy,aaaaa,kkkkk,lllll	N	
DC	Wilkins	350AR	##	H	########	########	Y	9	(ppp),qqq,sss,ttt,www,yyy,zzz,dddd,eeee,ssss,uuuu,vvvv,xxxx,yyyy,aaaaa,kkkkk,lllll	N	
DC	Wilkins	350AR	##	H	########	########	N	9	(ppp),qqq,sss,ttt,www,yyy,zzz,dddd,eeee,ssss,uuuu,vvvv,xxxx,yyyy,aaaaa,kkkkk,lllll	N	
DC	Wilkins	350AR	##	VU	########	########	Y	9	(ppp),qqq,sss,ttt,www,yyy,zzz,dddd,eeee,ssss,uuuu,vvvv,xxxx,yyyy,aaaaa,kkkkk,lllll	N	
DC	Wilkins	350AR	##	VU	########	########	N	9	(ppp),qqq,sss,ttt,www,yyy,zzz,dddd,eeee,ssss,uuuu,vvvv,xxxx,yyyy,aaaaa,kkkkk,lllll	N	
DC	Wilkins	350ARXL	####	H	########	########	Y	9	(gg),hh,ppp,qqq,ssss,tttt,vvvv,wwww,yyyy,zzzz	N	
DC	Wilkins	350ARXL	####	VU	########	########	Y	9	(gg),hh,ppp,qqq,ssss,tttt,vvvv,wwww,yyyy,zzzz	N	
DC	Wilkins	350ARXL	#	H	########	########	Y	9	(gg),hh,ppp,qqq,ssss,tttt,vvvv,wwww,yyyy,zzzz	N	
DC	Wilkins	350ARXL	#	VU	########	########	Y	9	(gg),hh,ppp,qqq,vvv,www,ssss,tttt,vvvv,wwww,yyyy,zzzz	N	
DC	Wilkins	350ARXL	#	H	########	########	Y	9	(gg),hh,ppp,qqq,vvv,www,ssss,tttt,vvvv,wwww,yyyy,zzzz	N	
DC	Wilkins	350ARXL	#	VU	########	########	Y	9	(gg),hh,ppp,qqq,vvv,www,ssss,tttt,vvvv,wwww,yyyy,zzzz	N	
DC	Wilkins	350ARXL	#	H	########	########	Y	9	(gg),hh,ppp,qqq,vvv,www,ssss,tttt,vvvv,wwww,yyyy,zzzz	N	
DC	Wilkins	350ARXL	#	VU	########	########	Y	9	(gg),hh,ppp,qqq,vvv,www,ssss,tttt,vvvv,wwww,yyyy,zzzz	N	
DC	Wilkins	350ARXL	#	H	########	########	Y	9	(gg),hh,ppp,qqq,vvv,www,ssss,tttt,vvvv,wwww,yyyy,zzzz	N	
DC	Wilkins	350ARXL	#	VU	########	########	Y	9	(gg),hh,ppp,qqq,vvv,www,ssss,tttt,vvvv,wwww,yyyy,zzzz	N	
DC	Wilkins	350ARXL	##	H	########	########	Y	9	(gg),hh,ppp,qqq,vvv,www,ssss,tttt,vvvv,wwww,yyyy,zzzz	N	
DC	Wilkins	350ARXL	##	VU	########	########	Y	9	(hh),ssss,tttt,xxxx,yyyy,zzzz,aaaaa	N	
DC	Wilkins	350AST	####	H	########	########	Y	10	(ppp),qqq,yyy,ssss,uuuu,vvvv,xxxx,yyyy,aaaaa,kkkkk,lllll	N	
DC	Wilkins	350AST	####	VU	########	########	Y	10	(ppp),qqq,yyy,ssss,uuuu,vvvv,xxxx,yyyy,aaaaa,kkkkk,lllll	N	
DC	Wilkins	350AST	#	H	########	########	Y	10	(ppp),qqq,yyy,ssss,uuuu,vvvv,xxxx,yyyy,aaaaa,kkkkk,lllll	N	
DC	Wilkins	350AST	#	VU	########	########	Y	10	(ppp),qqq,yyy,ssss,uuuu,vvvv,xxxx,yyyy,aaaaa,kkkkk,lllll	N	
DC	Wilkins	350AST	#	H	########	########	Y	10	(ppp),qqq,yyy,ssss,uuuu,vvvv,xxxx,yyyy,aaaaa,kkkkk,lllll	N	
DC	Wilkins	350AST	#	VU	########	########	Y	10	(ppp),qqq,yyy,ssss,uuuu,vvvv,xxxx,yyyy,aaaaa,kkkkk,lllll	N	
DC	Wilkins	350AST	#	H	########	########	Y	10	(yyy),ssss,uuuu,vvvv,xxxx,yyyy,aaaaa,kkkkk,lllll	N	
DC	Wilkins	350AST	#	VU	########	########	Y	10	(yyy), ssss, uuuu,vvvv, xxxx, yyyy, aaaaa,kkkkk, lllll	N	
DC	Wilkins	350AST	#	H	########		Y	10	(yyy), ssss,uuuu,vvvv,xxxx,yyyy,aaaaa,kkkkk,lllll	N	
DC	Wilkins	350AST	#	VU	########		Y	10	(yyy), ssss,uuuu,vvvv,xxxx,yyyy,aaaaa,kkkkk,lllll	N	
DC	Wilkins	350AST	##	H	########		Y	10	(yyy), ssss,uuuu,vvvv,xxxx,yyyy,aaaaa,kkkkk,lllll	N	
DC	Wilkins	350AST	##	VU	########		Y	10	(yyy), ssss,uuuu,vvvv,xxxx,yyyy,aaaaa,kkkkk,lllll	N	
DC	Wilkins	350ASTR	####	H	########		Y	10	(ppp),qqq,yyy,ssss,uuuu,vvvv,xxxx,yyyy,aaaaa,kkkkk,lllll	N	
DC	Wilkins	350ASTR	####	VU	########		Y	10	(ppp),qqq,yyy,ssss,uuuu,vvvv,xxxx,yyyy,aaaaa,kkkkk,lllll	N	
DC	Wilkins	350ASTR	#	H	########		Y	10	(ppp),qqq,yyy,ssss,uuuu,vvvv,xxxx,yyyy,aaaaa,kkkkk,lllll	N	
DC	Wilkins	350ASTR	#	VU	########		Y	10	(ppp),qqq,yyy,ssss,uuuu,vvvv,xxxx,yyyy,aaaaa,kkkkk,lllll	N	
DC	Wilkins	350ASTR	#	H	########		Y	10	(ppp),qqq,yyy,ssss,uuuu,vvvv,xxxx,yyyy,aaaaa,kkkkk,lllll	N	
DC	Wilkins	350ASTR	#	VU	########		Y	10	(ppp),qqq,yyy,ssss,uuuu,vvvv,xxxx,yyyy,aaaaa,kkkkk,lllll	N	
DC	Wilkins	350ASTR	#	H	########		Y	10	(yyy), ssss, uuuu,vvvv, xxxx, yyyy, aaaaa,kkkkk, lllll	N	
DC	Wilkins	350ASTR	#	VU	########		Y	10	(yyy), ssss, uuuu,vvvv, xxxx, yyyy, aaaaa,kkkkk, lllll	N	
DC	Wilkins	350ASTR	#	H	########		Y	10	(yyy), ssss,uuuu,vvvv,xxxx,yyyy,aaaaa,kkkkk,lllll	N	
DC	Wilkins	350ASTR	#	VU	########		Y	10	(yyy), ssss,uuuu,vvvv,xxxx,yyyy,aaaaa,kkkkk,lllll	N	
DC	Wilkins	350ASTR	##	H	########		Y	10	(yyy), ssss,uuuu,vvvv,xxxx,yyyy,aaaaa,kkkkk,lllll	N	
DC	Wilkins	350ASTR	##	VU	########		Y	10	(yyy), ssss,uuuu,vvvv,xxxx,yyyy,aaaaa,kkkkk,lllll	N	
DC	Wilkins	350AXL	####	H	########	########	N	9	(ppp),qqq,sss,ttt,yyy,ssss,uuuu,vvvv,xxxx,yyyy,aaaaa	N	
DC	Wilkins	350AXL	####	H	########	########	Y	9	(ppp),qqq,sss,ttt,yyy,ssss,uuuu,vvvv,xxxx,yyyy,aaaaa	N	
DC	Wilkins	350AXL	####	VU	########	########	N	9	(ppp),qqq,sss,ttt,yyy,ssss,uuuu,vvvv,xxxx,yyyy,aaaaa	N	
DC	Wilkins	350AXL	####	VU	########	########	Y	9	(ppp),qqq,sss,ttt,yyy,ssss,uuuu,vvvv,xxxx,yyyy,aaaaa	N	
DC	Wilkins	350AXL	#	H	########	########	N	9	(ppp),qqq,sss,ttt,yyy,ssss,uuuu,vvvv,xxxx,yyyy,aaaaa	N	
DC	Wilkins	350AXL	#	H	########	########	Y	9	(ppp),qqq,sss,ttt,yyy,ssss,uuuu,vvvv,xxxx,yyyy,aaaaa	N	
DC	Wilkins	350AXL	#	VU	########	########	N	9	(ppp),qqq,sss,ttt,yyy,ssss,uuuu,vvvv,xxxx,yyyy,aaaaa	N	
DC	Wilkins	350AXL	#	VU	########	########	Y	9	(ppp),qqq,sss,ttt,yyy,ssss,uuuu,vvvv,xxxx,yyyy,aaaaa	N	
DC	Wilkins	350AXL	#	H	########	########	N	9	(ppp),qqq,sss,ttt,www,yyy,ssss,uuuu,vvvv,xxxx,yyyy,aaaaa	N	
DC	Wilkins	350AXL	#	H	########	########	Y	9	(ppp),qqq,sss,ttt,www,yyy,ssss,uuuu,vvvv,xxxx,yyyy,aaaaa	N	
DC	Wilkins	350AXL	#	VU	########	########	N	9	(ppp),qqq,sss,ttt,yyy,ssss,uuuu,vvvv,xxxx,yyyy,aaaaa	N	
DC	Wilkins	350AXL	#	VU	########	########	Y	9	(ppp),qqq,sss,ttt,yyy,ssss,uuuu,vvvv,xxxx,yyyy,aaaaa	N	
DC	Wilkins	350AXL	#	H	########	########	N	9	(ppp),sss,ttt,qqq,yyy,zzz,dddd,ssss,uuuu,vvvv,xxxx,yyyy,aaaaa	N	
DC	Wilkins	350AXL	#	H	########	########	Y	9	(ppp),sss,ttt,qqq,yyy,zzz,dddd,ssss,uuuu,vvvv,xxxx,yyyy,aaaaa	N	
DC	Wilkins	350AXL	#	VU	########	########	N	9	(ppp),sss,ttt,qqq,yyy,zzz,dddd,ssss,uuuu,vvvv,xxxx,yyyy,aaaaa	N	
DC	Wilkins	350AXL	#	VU	########	########	Y	9	(ppp),sss,ttt,qqq,yyy,zzz,dddd,ssss,uuuu,vvvv,xxxx,yyyy,aaaaa	N	
DC	Wilkins	350AXL	#	H	########	########	N	9	(ppp),qqq,sss,ttt,www,yyy,zzz,dddd,eeee,ssss,uuuu,vvvv,xxxx,yyyy,aaaaa	N	
DC	Wilkins	350AXL	#	H	########	########	Y	9	(ppp),qqq,sss,ttt,www,yyy,zzz,dddd,eeee,ssss,uuuu,vvvv,xxxx,yyyy,aaaaa	N	
DC	Wilkins	350AXL	#	VU	########	########	N	9	(ppp),qqq,sss,ttt,www,yyy,zzz,dddd,eeee,ssss,uuuu,vvvv,xxxx,yyyy,aaaaa	N	
DC	Wilkins	350AXL	#	VU	########	########	Y	9	(ppp),qqq,sss,ttt,www,yyy,zzz,dddd,eeee,ssss,uuuu,vvvv,xxxx,yyyy,aaaaa	N	
DC	Wilkins	350AXL	##	H	########	########	Y	9	(ppp),qqq,sss,ttt,www,yyy,zzz,dddd,eeee,ssss,uuuu,vvvv,xxxx,yyyy,aaaaa	N	
DC	Wilkins	350AXL	##	VU	########	########	Y	9	(ppp),qqq,sss,ttt,www,yyy,zzz,dddd,eeee,ssss,uuuu,vvvv,xxxx,yyyy,aaaaa	N	
DC	Wilkins	350XL	3/4	H	########	########	Y	9	(iiii)	N	
DC	Wilkins	350XL	3/4	VU	########	########	Y	9	(iiii)	N	
DC	Wilkins	350XL	#	H	########	########	Y	9	(iiii)	N	
DC	Wilkins	350XL	#	VU	########	########	Y	9	(iiii)	N	
DC	Wilkins	350XL	####	H	########	########	Y	9	(int)	N	
DC	Wilkins	350XL	####	VU	########	########	Y	9	(int)	N	
DC	Wilkins	350XL	####	H	########	########	Y	9	(int)	N	
DC	Wilkins	350XL	####	VU	########	########	Y	9	(int)	N	
DC	Wilkins	350XL	#	H	########	########	Y	9	(int)	N	
DC	Wilkins	350XL	#	VU	########	########	Y	9	(int)	N	
DC	Wilkins	350XL	####	H	########	########	N	9	ee,ff,ll,mm,tt,uu,yy,zz,zzz,dddd	N	
DC	Wilkins	350XL	####	H	########	########	Y	9	(gg),hh,ppp,qqq,ssss,tttt,vvvv,wwww,yyyy,zzzz	N	
DC	Wilkins	350XL	####	VU	########	########	N	9	ee,ff,ll,mm,tt,uu,yy,zz,zzz,dddd	N	
DC	Wilkins	350XL	####	VU	########	########	Y	9	(gg),hh,ppp,qqq,ssss,tttt,vvvv,wwww,yyyy,zzzz	N	
DC	Wilkins	350XL	#	H	########	########	N	9	ee,ff,ll,mm,tt,uu,yy,zz,zzz,dddd	N	
DC	Wilkins	350XL	#	H	########	########	Y	9	(gg),hh,ppp,qqq,ssss,tttt,vvvv,wwww,yyyy,zzzz	N	
DC	Wilkins	350XL	#	VU	########	########	N	9	ee,ff,ll,mm,tt,uu,yy,zz,zzz,dddd	N	
DC	Wilkins	350XL	#	VU	########	########	Y	9	(gg),hh,ppp,qqq,ssss,tttt,vvvv,wwww,yyyy,zzzz	N	

Type	Manufacturer	Model	Size	Orientation(s)	Approved	Renewed	≤0.25% Pb	Manual	Shutoffs	Spare Parts	Bypass
DC	Wilkins	350XL	#	H	########	########	N	9	ee,ff,ll,mm,tt,uu,yy,zz,zzz,dddd,eeee	N	
DC	Wilkins	350XL	#	H	########	########	Y	9	(gg),hh,ppp,qqq,vvv,www,ssss,tttt,vvvv,wwww,yyyy,zzzz	N	
DC	Wilkins	350XL	#	VU	########	########	N	9	ee,ff,ll,mm,tt,uu,yy,zz,zzz,dddd,eeee	N	
DC	Wilkins	350XL	#	VU	########	########	Y	9	(gg),hh,ppp,qqq,vvv,www,ssss,tttt,vvvv,wwww,yyyy,zzzz	N	
DC	Wilkins	350XL	#	H	########	########	N	9	ee,ff,ll,mm,tt,uu,yy,zz,zzz,dddd,eeee	N	
DC	Wilkins	350XL	#	H	########	########	Y	9	(gg),hh,ppp,qqq,vvv,www,ssss,tttt,vvvv,wwww,yyyy,zzzz	N	
DC	Wilkins	350XL	#	VU	########	########	N	9	ee,ff,ll,mm,tt,uu,yy,zz,zzz,dddd,eeee	N	
DC	Wilkins	350XL	#	VU	########	########	Y	9	(gg),hh,ppp,qqq,vvv,www,ssss,tttt,vvvv,wwww,yyyy,zzzz	N	
DC	Wilkins	350XL	#	H	########	########	N	9	ee,ff,ll,mm,tt,uu,yy,zz,zzz,dddd,eeee	N	
DC	Wilkins	350XL	#	H	########	########	Y	9	(gg),hh,ppp,qqq,vvv,www,ssss,tttt,vvvv,wwww,yyyy,zzzz	N	
DC	Wilkins	350XL	#	VU	########	########	N	9	ee,ff,ll,mm,tt,uu,yy,zz,zzz,dddd,eeee	N	
DC	Wilkins	350XL	#	VU	########	########	Y	9	(gg),hh,ppp,qqq,vvv,www,ssss,tttt,vvvv,wwww,yyyy,zzzz	N	
DC	Wilkins	350XL	##	H	########	########	N	9	ee,ff,ll,mm,tt,uu,yy,zz,zzz,dddd,eeee	N	
DC	Wilkins	350XL	##	H	########	########	Y	9	(ppp),qqq,sss,ttt,yyy,ssss,uuuu,vvvv,xxxx,yyyy,aaaaa	N	
DC	Wilkins	350XL	##	VU	########	########	N	9	ee,ff,ll,mm,tt,uu,yy,zz,zzz,dddd,eeee	N	
DC	Wilkins	350XL	##	VU	########	########	Y	9	(ppp),qqq,sss,ttt,yyy,ssss,uuuu,vvvv,xxxx,yyyy,aaaaa	N	
DC	Wilkins	350XL	##	H	########	########	Y	9	(hh),ssss,tttt,uuuu,vvvv,wwww,xxxx,yyyy,zzzz,aaaaa	N	
DC	Wilkins	450XL	####	VUVU	########	########	N	9	(gg),hh,ppp,qqq,ssss,tttt,vvvv,wwww,yyyy,zzzz	N	
DC	Wilkins	450XL	####	VUVU	########	########	Y	9	(gg),hh,ppp,qqq,ssss,tttt,vvvv,wwww,yyyy,zzzz	N	
DC	Wilkins	450XL	#	VUVU	########	########	N	9	(gg),hh,ppp,qqq,ssss,tttt,vvvv,wwww,yyyy,zzzz	N	
DC	Wilkins	450XL	#	VUVU	########	########	Y	9	(gg),hh,ppp,qqq,vvv,www,ssss,tttt,vvvv,wwww,yyyy,zzzz	N	
DC	Wilkins	450XL	#	VUVU	########	########	N	9	(gg),hh,ppp,qqq,vvv,www,ssss,tttt,vvvv,wwww,yyyy,zzzz	N	
DC	Wilkins	450XL	#	VUVU	########	########	Y	9	(gg),hh,ppp,qqq,vvv,www,ssss,tttt,vvvv,wwww,yyyy,zzzz	N	
DC	Wilkins	450XL	#	VUVU	########	########	N	9	(gg),hh,ppp,qqq,vvv,www,ssss,tttt,vvvv,wwww,yyyy,zzzz	N	
DC	Wilkins	450XL	#	VUVU	########	########	Y	9	(gg),hh,ppp,qqq,vvv,www,ssss,tttt,vvvv,wwww,yyyy,zzzz	N	
DC	Wilkins	450XL	##	VUVU	########	########	N	9	(gg),hh,ppp,qqq,vvv,www,ssss,tttt,vvvv,wwww,yyyy,zzzz	N	
DC	Wilkins	450XL	##	VUVU	########	########	Y	9	(hh),ssss,tttt,xxxx,yyyy,zzzz,aaaaa	N	
DC	Wilkins	550	3/4	H	########	########	N	5	(ppp),qqq,sss,ttt,yyy,ssss,uuuu,vvvv,xxxx,yyyy,aaaaa	Y	
DC	Wilkins	550	#	H	########	########	N	5	(ppp),qqq,sss,ttt,yyy,ssss,uuuu,vvvv,xxxx,yyyy,aaaaa	Y	
DC	Wilkins	550	####	H	########	########	N	5	(ppp),qqq,sss,ttt,yyy,ssss,uuuu,vvvv,xxxx,yyyy,aaaaa	Y	
DC	Wilkins	550	####	H	########	########	N	5	(ppp),qqq,sss,ttt,yyy,ssss,uuuu,vvvv,xxxx,yyyy,aaaaa	Y	
DC	Wilkins	550	####	H	########	########	N	5	(ppp),qqq,sss,ttt,yyy,ssss,uuuu,vvvv,xxxx,yyyy,aaaaa	Y	
DC	Wilkins	550	#	H	########	########	N	5	(ppp),qqq,sss,ttt,yyy,ssss,uuuu,vvvv,xxxx,yyyy,aaaaa	Y	
DC	Wilkins	550	####	H	########	########	N	7	(ppp),qqq,sss,ttt,yyy,ssss,uuuu,vvvv,xxxx,yyyy,aaaaa	Y	
DC	Wilkins	550	#	H	########	########	N	5	(ppp),qqq,sss,ttt,yyy,ssss,uuuu,vvvv,xxxx,yyyy,aaaaa	Y	
DC	Wilkins	550	#	H	########	########	N	5	(ppp),qqq,sss,ttt,www,yyy,ssss,uuuu,vvvv,xxxx,yyyy,aaaaa	Y	
DC	Wilkins	550	#	H	########	########	N	6	(ppp),qqq,sss,ttt,www,yyy,ssss,uuuu,vvvv,xxxx,yyyy,aaaaa	Y	
DC	Wilkins	550A	3/4	H	########	########	N	7	(ppp),qqq,sss,ttt,yyy,ssss,uuuu,vvvv,xxxx,yyyy,aaaaa	Y	
DC	Wilkins	550A	#	H	########	########	N	7	(ppp),qqq,sss,ttt,yyy,ssss,uuuu,vvvv,xxxx,yyyy,aaaaa	Y	
DC	Wilkins	550M	#	H	########	########	N	8	(ppp),sss,ttt,qqq,yyy,zzz,dddd,ssss,uuuu,vvvv,xxxx,yyyy,aaaaa	Y	
DC	Wilkins	550M	##	H	########	########	N	6	(ppp),sss,ttt,qqq,yyy,zzz,dddd,ssss,uuuu,vvvv,xxxx,yyyy,aaaaa	Y	
DC	Wilkins	950	3/4	H	########	########	N	8	(ppp),sss,ttt,qqq,yyy,zzz,dddd,ssss,uuuu,vvvv,xxxx,yyyy,aaaaa	Y	
DC	Wilkins	950	#	H	########	########	N	8	(ppp),sss,ttt,qqq,yyy,zzz,dddd,ssss,uuuu,vvvv,xxxx,yyyy,aaaaa	Y	
DC	Wilkins	950	####	H	########	########	N	8	(ppp),qqq,sss,ttt,www,yyy,zzz,dddd,eeee,ssss,uuuu,vvvv,xxxx,yyyy,aaaaa	Y	
DC	Wilkins	950	####	H	########	########	N	8	(ppp),qqq,sss,ttt,www,yyy,zzz,dddd,eeee,ssss,uuuu,vvvv,xxxx,yyyy,aaaaa	Y	
DC	Wilkins	950	#	H	########	########	N	8	(ppp),qqq,sss,ttt,www,yyy,zzz,dddd,eeee,ssss,uuuu,vvvv,xxxx,yyyy,aaaaa	Y	
DC	Wilkins	950	####	H	########	########	N	8	(ppp),qqq,sss,ttt,www,yyy,zzz,dddd,eeee,ssss,uuuu,vvvv,xxxx,yyyy,aaaaa	Y	
DC	Wilkins	950	#	H	########	########	N	8	(ppp),qqq,sss,ttt,www,yyy,zzz,dddd,eeee,ssss,uuuu,vvvv,xxxx,yyyy,aaaaa	N	
DC	Wilkins	950	#	H	########	########	N	8	(ppp),qqq,sss,ttt,www,yyy,zzz,dddd,eeee,ssss,uuuu,vvvv,xxxx,yyyy,aaaaa	Y	
DC	Wilkins	950	#	H	########	########	N	8	(ppp),qqq,sss,ttt,www,yyy,zzz,dddd,eeee,ssss,uuuu,vvvv,xxxx,yyyy,aaaaa	Y	
DC	Wilkins	950	#	H	########	########	N	8	(gg),hh,ppp,qqq,ssss,uuuu,vvvv,xxxx,yyyy,aaaaa	N	
DC	Wilkins	950A	3/4	H	########	########	N	8	(ppp),qqq,sss,ttt,www,yyy,ssss,uuuu,vvvv,xxxx,yyyy,aaaaa	Y	
DC	Wilkins	950A	#	H	########	########	N	8	(ppp),qqq,sss,ttt,www,yyy,ssss,uuuu,vvvv,xxxx,yyyy,aaaaa	Y	
DC	Wilkins	950A	####	H	########	########	N	8	ii	Y	
DC	Wilkins	950A	####	H	########	########	N	8	ii	Y	
DC	Wilkins	950A	#	H	########	########	N	8	ii	Y	
DC	Wilkins	950XL	3/4	H	########	########	N	8	(ii),ooo	N	
DC	Wilkins	950XL	3/4	VU	########	########	N	8	(ii),ooo	N	
DC	Wilkins	950XL	#	H	########	########	N	8	(ii),ooo	N	
DC	Wilkins	950XL	####	H	########	########	N	8	(ii),ooo,ggg	N	
DC	Wilkins	950XL	####	H	########	########	N	8	(ii),ooo	N	
DC	Wilkins	950XL	#	H	########	########	N	8	(ii),bbb,ooo	N	
DC	Wilkins	950XLD	3/4	H	########	########	N	9	(ii),ooo	N	
DC	Wilkins	950XLD	3/4	H	########	########	Y	9	(ii),ooo	N	
DC	Wilkins	950XLD	3/4	H	########		N	10	(iiii)	N	
DC	Wilkins	950XLD	3/4	H	########		Y	10	(iiii)	N	
DC	Wilkins	950XLD	3/4	VU	########	########	N	9	(ii),ooo	N	
DC	Wilkins	950XLD	3/4	VU	########	########	Y	9	(ii),ooo	N	
DC	Wilkins	950XLD	3/4	VU	########		N	10	(iiii)	N	
DC	Wilkins	950XLD	3/4	VU	########		Y	10	(iiii)	N	
DC	Wilkins	950XLT	3/4	H	########	########	N	9	(ii),ooo	N	
DC	Wilkins	950XLT	#	H	########	########	N	9	(ii),ooo	N	
DC	Wilkins	950XLT	####	H	########	########	N	9	(ii),ooo	N	
DC	Wilkins	950XLT	####	H	########	########	N	9	(ii),ooo	N	
DC	Wilkins	950XLT	#	H	########	########	N	9	(ii),ooo,bbbbb,ccccc	N	
DC	Wilkins	950XLT2	3/4	H	########	########	Y	9	(iiii)	N	
DC	Wilkins	950XLT2	#	H	########	########	Y	9	(iiii)	N	
DC	Wilkins	950XLT2	####	H	########	########	Y	9	(iiii)	N	
DC	Wilkins	950XLT2	####	H	########	########	Y	9	(iiii)	N	
DC	Wilkins	950XLT2	#	H	########	########	Y	9	(iiii)	N	
DC	Wilkins	950XLT2U	3/4	H	########	########	Y	9	(mmmmm)	N	
DC	Wilkins	950XLTBF	#	H	########	########	N	9	(bbbbb)	N	
DC	Wilkins	950XLTBFSS	#	H	########	########	N	9	(ccccc)	N	
DC	Wilkins	950XLTU	3/4	H	########	########	N	9	(ggg),xxx	N	
DC	Wilkins	950XLTU	#	H	########	########	N	9	(ggg),xxx	N	
DC	Wilkins	950XLU	3/4	H	########	########	N	8	(ggg),xxx	N	
DC	Wilkins	950XLU	#	H	########	########	N	8	(ggg),xxx	N	
DC	Wilkins	950XLU	####	H	########	########	N	8	(ggg),xxx	N	
DC	Wilkins	950XLU	#	H	########	########	N	8	(ggg),xxx	N	
DC	Wilkins	MBD	#								
DC	Wilkins	MBD	##								
DC	Wilkins	350D	3/4	H	########	########	N	9	(ii), ooo	N	
DC	Wilkins	350D	3/4	VU	########	########	N	9	(ii), ooo	N	
DCDA	Ames	3000-1SS	##	H	########	########	N	9	(mm), ll	N	Ames 200B 3/4" (H); Watts 719QT 3/4" (H)
DCDA	Ames	3000-1SS	##	VU	########	########	N	9	(mm), ll	N	Ames 200B 3/4" (VU); Watts 719QT 3/4" (VU)
DCDA	Ames	3000B	#	H	########	########	N	9	(bbb),jjjj,rrrrr	N	Ames 2000B 1/2" (H), Watts 007QT 1/2" (H)
DCDA	Ames	3000B	#	VU	########	########	N	9	(bbb),jjjj,rrrrr	N	Ames 2000B 1/2" (VU), Watts 007QT 1/2" (VU)
DCDA	Ames	3000B-FP	#	H	########	########	N	9	(eeeee)	N	Ames 2000B 1/2" (H), Watts 007QT 1/2" (H)
DCDA	Ames	3000BM1	#	H	########		N	9	(eeeee), bbb, jjjj,rrrrr	N	Ames 2000B 1/2" (H), Watts 007QT 1/2" (H)
DCDA	Ames	3000BM1	#	VU	########		N	9	(eeeee), bbb, jjjj,rrrrr	N	Ames 2000B 1/2" (VU), Watts 007QT 1/2" (VU)
DCDA	Ames	3000CIV	#	H	########	########	N	6	(pp),hh,uu,eee	N	Ames 2000B 1/2"(H),Watts 007QT 1/2"(H)
DCDA	Ames	3000CIV	#	VU	########	########	N	8	(pp),hh,uu,eee	N	Ames 2000B 1/2"(VU),Watts 007QT 1/2"(VU)
DCDA	Ames	3000CIV	#	H	########	########	N	6	(pp),hh,uu,eee	N	Ames 2000B 1/2"(H),Watts 007QT 1/2"(H)
DCDA	Ames	3000CIV	#	VU	########	########	N	8	(pp),hh,mm,uu,eee	N	Ames 2000B 1/2" (VU), Watts 007QT 1/2" (VU)
DCDA	Ames	3000CIV	#	H	########	########	N	6	(pp),hh,mm,uu,eee	N	Ames 2000B 1/2"(H),Watts 007QT 1/2"(H)
DCDA	Ames	3000CIV	#	VU	########	########	N	8	(pp),hh,mm,uu,eee	N	Ames 2000B 1/2" (VU), Watts 007QT 1/2" (VU)
DCDA	Ames	3000CIV	##	H	########	########	N	6	(pp),hh,mm,uu,eee	N	Ames 2000B 1/2"(H),Watts 007QT 1/2"(H)
DCDA	Ames	3000CIV	##	VU	########	########	N	8	(pp),hh,mm,uu,eee	N	Ames 2000B 1/2" (VU), Watts 007QT 1/2" (VU)
DCDA	Ames	3000DCDA	#	H	########	########	N	7	uu,ee,ff,gg,hh,mm,oo,pp,ccc,ddd,ffff,gggg	Y	Watts 007QT 3/4" (H)
DCDA	Ames	3000DCDA	#	H	########	########	N	7	uu,ee,ff,gg,hh,mm,oo,pp,ccc,ddd,ffff,gggg	Y	Watts 709QT 3/4" (H)
DCDA	Ames	3000DCDA	#	H	########	########	N	7	uu,ee,ff,gg,hh,mm,oo,pp,ccc,ddd,ffff,gggg	Y	Watts 007QT 3/4" (H)
DCDA	Ames	3000DCDC	##	H	########	########	N	7	(uu),ee,ff,gg,hh,oo,pp,ccc,ddd,ffff,gggg	N	Watts007M2QT 3/4" (H),Watts 709QT 3/4" (H), Ames 2000B
DCDA	Ames	3000GDCDA	#	H	########	########	N	7	uu,ee,ff,gg,hh,mm,oo,pp,ccc,ddd,ffff,gggg	Y	Watts 007QT 3/4" (H)
DCDA	Ames	3000GDCDA	#	H	########	########	N	7	uu,ee,ff,gg,hh,mm,oo,pp,ccc,ddd,ffff,gggg	Y	Watts 709QT 3/4" (H)
DCDA	Ames	3000GDCDA	#	H	########	########	N	7	uu,ee,ff,gg,hh,mm,oo,pp,ccc,ddd,ffff,gggg	Y	Watts 007QT 3/4" (H)
DCDA	Ames	3000GDCDC	##	H	########	########	N	7	uu,ee,ff,gg,hh,oo,pp,ccc,ddd,ffff,gggg	Y	Watts 709QT 3/4" (H)
DCDA	Ames	3000SE	####	H	########	########	N	8	(mm),ee,ff,gg,hh,ll,oo,pp,tt,uu,ccc,ddd,ffff,gggg	N	Watts007M2QT 3/4" (H), Ames 2000B 3/4" (H)
DCDA	Ames	3000SE	#	H	########	########	N	8	uu,ee,ff,gg,hh,ll,mm,oo,pp,tt,ccc,ddd,ffff,gggg	Y	Watts007M2QT 3/4" (H), Ames 2000B 3/4" (H)
DCDA	Ames	3000SE	#	H	########	########	N	8	uu,ee,ff,gg,hh,ll,mm,oo,pp,tt,ccc,ddd,ffff,gggg	Y	Watts 007M1QT 3/4" (H)
DCDA	Ames	3000SEA	#	H	########	########	N	8	uu,ee,ff,gg,hh,ll,mm,oo,pp,tt,ccc,ddd,ffff,gggg	Y	Ames 2000SS 3/4" (H)
DCDA	Ames	3000SEWM1	#	H	########	########	N	8	(uu),ee,ff,gg,hh,ll,mm,oo,pp,tt,ccc,ddd,ffff,gggg	N	Watts 007M1QT 3/4" (H)
DCDA	Ames	3000SS	####	H	########	########	N	8	(uu),ee,ff,gg,hh,ll,mm,oo,pp,tt,ccc,ddd,ffff,gggg	N	Watts007M2QT 3/4" (H), Ames 2000B 3/4" (H)
DCDA	Ames	3000SS	####								

Type	Manufacturer	Model	Size	Orientation(s)	Approved	Renewed	≤0.25% Pb	Manual	Shutoffs	Spare Parts	Bypass
DCDA	Ames	3000SS	#	H	########	########	N	8	(uu),ee,ff,gg,hh,ll,mm,oo,pp,tt,ccc,ddd,ffff,gggg	N	Watts007M2QT 3/4" (H), Ames 2000B 3/4" (H)
DCDA	Ames	3000SS	#								
DCDA	Ames	3000SS	#	H	########	########	N	8	(uu),ee,ff,gg,hh,ll,mm,oo,pp,tt,ccc,ddd,ffff,gggg	N	Watts007M2QT 3/4" (H), Ames 2000B 3/4" (H)
DCDA	Ames	3000SS	#								
DCDA	Ames	3000SS	#	H	########	########	N	8	(uu),ee,ff,gg,hh,ll,mm,oo,pp,tt,ccc,ddd,ffff,gggg	N	Watts 007M1QT 3/4" (H)
DCDA	Ames	3000SS	#								
DCDA	Ames	3000SS	#	H	########	########	N	8	(uu),ee,ff,gg,hh,ll,mm,tt,ccc,ddd,ffff,gggg	N	Watts007M2QT 3/4" (H), Ames 2000B 3/4" (H)
DCDA	Ames	3000SS	##	H	########	########	N	8	(ll),mm,oo,pp,ffff,gggg	N	Ames 2000B 3/4" (H)
DCDA	Ames	3000SS	##	H	########	########	N	9	(mm), ll	N	Ames 2000BM3 3/4" (H)
DCDA	Ames	3000SS	##	VU	########	########	N	9	(mm), ll	N	Ames 2000BM3 3/4" (VU)
DCDA	Ames	3000SSA	#	H	########	########	N	8	uu,ee,ff,gg,hh,ll,mm,oo,pp,tt,ccc,ddd,ffff,gggg	Y	Ames 2000SS 3/4" (H)
DCDA	Ames	3000SSM	#	H	########	########	N	8	uu,ee,ff,gg,hh,ll,mm,oo,pp,tt,ccc,ddd,ffff,gggg	Y	Ames 2000SS 1" (H)
DCDA	Ames	3000SSM	#	H	########	########	N	8	(uu),ee,ff,gg,hh,ll,mm,oo,pp,tt,ccc,ddd,ffff,gggg	N	Watts 007M2QT 1 1/2" (H)
DCDA	Ames	3000SSWM1	####	H	########	########	N	8	(uu),ee,ff,gg,hh,ll,mm,oo,pp,tt,ccc,ddd,ffff,gggg	N	Watts 007M1QT 3/4" (H)
DCDA	Ames	3000SSWM1	#	H	########	########	N	8	(uu),ee,ff,gg,hh,ll,mm,oo,pp,tt,ccc,ddd,ffff,gggg	N	Watts 007M1QT 3/4" (H)
DCDA	Ames	3000SSWM1	#	H	########	########	N	8	(uu),ee,ff,gg,hh,ll,mm,oo,pp,tt,ccc,ddd,ffff,gggg	N	Watts 007M1QT 3/4" (H)
DCDA	Ames	Colt 300aBF	####	H	########	########	N	9	(yyy)	N	Ames 2000BM3 3/4" (H)
DCDA	Ames	Colt 300aBF	####	VU	########	########	N	9	(yyy)	N	Ames 2000BM3 3/4" (VU)
DCDA	Ames	Colt 300aBF	#	H	########	########	N	9	(yyy)	N	Ames 2000BM3 3/4" (H)
DCDA	Ames	Colt 300aBF	#	VU	########	########	N	9	(yyy)	N	Ames 2000BM3 3/4" (VU)
DCDA	Ames	Colt 300aBF	#	H	########	########	N	9	(yyy)	N	Ames 2000BM3 3/4" (H)
DCDA	Ames	Colt 300aBF	#	VU	########	########	N	9	(yyy)	N	Ames 2000BM3 3/4" (VU)
DCDA	Ames	Colt 300aBF	#	H	########	########	N	9	(yyy)	N	Ames 2000BM3 3/4" (H)
DCDA	Ames	Colt 300aBF	#	VU	########	########	N	9	(yyy)	N	Ames 2000BM3 3/4" (VU)
DCDA	Ames	Colt 300aGV	####	H	########	########	N	9	(zzz)	N	Ames 2000BM3 3/4" (H)
DCDA	Ames	Colt 300aGV	####	VU	########	########	N	9	(zzz)	N	Ames 2000BM3 3/4" (VU)
DCDA	Ames	Colt 300aGV	#	H	########	########	N	9	(zzz)	N	Ames 2000BM3 3/4" (H)
DCDA	Ames	Colt 300aGV	#	VU	########	########	N	9	(zzz)	N	Ames 2000BM3 3/4" (VU)
DCDA	Ames	Colt 300aGV	#	H	########	########	N	9	(zzz)	N	Ames 2000BM3 3/4" (H)
DCDA	Ames	Colt 300aGV	#	VU	########	########	N	9	(zzz)	N	Ames 2000BM3 3/4" (VU)
DCDA	Ames	Colt 300aGV	#	H	########	########	N	9	(zzz)	N	Ames 2000BM3 3/4 (H)
DCDA	Ames	Colt 300aGV	#	VU	########	########	N	9	(zzz)	N	Ames 2000BM3 3/4" (VU)
DCDA	Ames	Colt 300BF	####	H	########	########	N	9	(yyy)	N	Ames 2000BM3 3/4" (H)
DCDA	Ames	Colt 300BF	####	VU	########	########	N	9	(yyy)	N	Ames 2000BM3 3/4" (VU)
DCDA	Ames	Colt 300BF	#	H	########	########	N	9	(yyy)	N	Ames 2000BM3 3/4" (H)
DCDA	Ames	Colt 300BF	#	VU	########	########	N	9	(yyy)	N	Ames 2000BM3 3/4" (VU)
DCDA	Ames	Colt 300BF	#	H	########	########	N	9	(yyy)	N	Ames 2000BM3 3/4" (H)
DCDA	Ames	Colt 300BF	#	VU	########	########	N	9	(yyy)	N	Ames 2000BM3 3/4" (VU)
DCDA	Ames	Colt 300BF	#	H	########	########	N	9	(yyy)	N	Ames 2000BM3 3/4"(H)
DCDA	Ames	Colt 300BF	#	VU	########	########	N	9	(yyy)	N	Ames 2000BM3 3/4"(V)
DCDA	Ames	Colt 300BF	#	H	########	########	N	9	(yyy)	N	Ames 2000BM3 3/4" (H & VU)
DCDA	Ames	Colt 300BF	#	VU	########	########	N	9	(yyy)	N	Ames 2000BM3 3/4" (H & VU)
DCDA	Ames	Colt 300BF	##	H	########	########	N	9	(yyy)	N	Watts 007M3QT 3/4" (H), Ames 2000 BM3 (H)
DCDA	Ames	Colt 300BF	##	VU	########	########	N	9	(yyy)	N	Watts 007M3QT 3/4" (V), Ames 2000 BM3 (V)
DCDA	Ames	Colt 300GV	####	H	########	########	N	9	(zzz)	N	Ames 2000BM3 3/4" (H)
DCDA	Ames	Colt 300GV	####	VU	########	########	N	9	(zzz)	N	Ames 2000BM3 3/4" (VU)
DCDA	Ames	Colt 300GV	#	H	########	########	N	9	(zzz)	N	Ames 2000BM3 3/4" (H)
DCDA	Ames	Colt 300GV	#	VU	########	########	N	9	(zzz)	N	Ames 2000BM3 3/4" (VU)
DCDA	Ames	Colt 300GV	#	H	########	########	N	9	(zzz)	N	Ames 2000BM3 3/4" (H)
DCDA	Ames	Colt 300GV	#	VU	########	########	N	9	(zzz)	N	Ames 2000BM3 3/4" (VU)
DCDA	Ames	Colt 300GV	#	H	########	########	N	9	(zzz)	N	Ames 2000BM3 3/4"(H)
DCDA	Ames	Colt 300GV	#	VU	########	########	N	9	(zzz)	N	Ames 2000BM3 3/4"(V)
DCDA	Ames	Colt 300GV	#	H	########	########	N	9	(zzz)	N	Ames 2000BM3 3/4" (H & VU)
DCDA	Ames	Colt 300GV	#	VU	########	########	N	9	(zzz)	N	Ames 2000BM3 3/4" (H & VU)
DCDA	Ames	Colt 300GV	##	H	########	########	N	9	(zzz)	N	Watts 007M3QT 3/4" (H), Ames 2000 BM3 (H)
DCDA	Ames	Colt 300GV	##	VU	########	########	N	9	(zzz)	N	Watts 007M3QT 3/4" (V), Ames 2000 BM3 (V)
DCDA	Ames	Colt 300NBF	####	VUVU	########	########	N	9	(yyy)	N	Ames 2000BM3 3/4" (H)
DCDA	Ames	Colt 300NBF	#	VUVU	########	########	N	9	(yyy)	N	Ames 2000BM3 3/4" (H)
DCDA	Ames	Colt 300NBF	#	VUVU	########	########	N	9	(yyy)	N	Ames 2000BM3 3/4" (H)
DCDA	Ames	Colt 300NBF	#	VUVU	########	########	N	9	(yyy)	N	Ames 2000BM3 3/4" (H)
DCDA	Ames	Colt 300NBF	#	VUVU	########	########	N	9	(yyy)	N	Ames 2000BM3 3/4" (H)
DCDA	Ames	Colt 300NBF	##	VUVU	########		N	9	(yyy)	N	Ames 2000BM3 3/4" (H), Watts 007M3QT 3/4" (H)
DCDA	Ames	Colt 300NGV	####	VUVU	########	########	N	9	(zzz)	N	Ames 2000BM3 3/4" (H)
DCDA	Ames	Colt 300NGV	#	VUVU	########	########	N	9	(zzz)	N	Ames 2000BM3 3/4" (H)
DCDA	Ames	Colt 300NGV	#	VUVU	########	########	N	9	(zzz)	N	Ames 2000BM3 3/4" (H)
DCDA	Ames	Colt 300NGV	#	VUVU	########	########	N	9	(zzz)	N	Ames 2000BM3 3/4" (H)
DCDA	Ames	Colt 300NGV	#	VUVU	########	########	N	9	(zzz)	N	Ames 2000BM3 3/4" (H)
DCDA	Ames	Colt 300NGV	##	VUVU	########		N	9	(zzz)	N	Ames 2000BM3 3/4" (H), Watts 007M3QT 3/4" (H)
DCDA	Ames	DCDA	#								
DCDA	Ames	DCDA	#								
DCDA	Ames	DCDA	#								
DCDA	Ames	DCDA	#								
DCDA	Ames	DCDA	##								
DCDA	Ames	DCDA-I	#								
DCDA	Ames	DCDA-I	#								
DCDA	Ames	DCDC	#	H	########	########	N	6	ee,ff,gg,hh,oo,pp,ccc,ddd,ffff,gggg	Y	Watts 709QT 3/4" (H)
DCDA	Ames	DCDC	#	H	########	########	N	6	ee,ff,gg,hh,oo,pp,ccc,ddd,ffff,gggg	Y	Watts 709QT 3/4" (H)
DCDA	Ames	DCDC	#	H	########	########	N	7	ee,ff,gg,hh,oo,pp,ccc,ddd,ffff,gggg	Y	Watts 709QT 3/4" (H)
DCDA	Ames	DCDC	##								
DCDA	Ames	LFColt 300BF	####	H	########		Y	9	(yyy)	N	Watts LF007M3QT 3/4" (H), Ames LF2000BM3 3/4" (H)
DCDA	Ames	LFColt 300BF	####	VU	########		Y	9	(yyy)	N	Watts LF007M3QT 3/4" (VU), Ames LF2000BM3 3/4" (VU)
DCDA	Ames	LFColt 300BF	#	H	########		Y	9	(yyy)	N	Watts LF007M3QT 3/4" (H), Ames LF2000BM3 3/4" (H)
DCDA	Ames	LFColt 300BF	#	VU	########		Y	9	(yyy)	N	Watts LF007M3QT 3/4" (VU), Ames LF2000BM3 3/4" (VU)
DCDA	Ames	LFColt 300BF	#	H	########		Y	9	(yyy)	N	Watts LF007M3QT 3/4" (H), Ames LF2000BM3 3/4" (H)
DCDA	Ames	LFColt 300BF	#	VU	########		Y	9	(yyy)	N	Watts LF007M3QT 3/4" (VU), Ames LF2000BM3 3/4" (VU)
DCDA	Ames	LFColt 300BF	#	H	########		Y	9	(yyy)	N	Watts LF007M3QT 3/4" (H), Ames LF2000BM3 3/4" (H)
DCDA	Ames	LFColt 300BF	#	VU	########		Y	9	(yyy)	N	Watts LF007M3QT 3/4" (VU), Ames LF2000BM3 3/4" (VU)
DCDA	Ames	LFColt 300BF	##	H	########		Y	9	(yyy)	N	Watts LF007M3QT 3/4" (H), Ames LF2000BM3 3/4" (H)
DCDA	Ames	LFColt 300BF	##	VU	########		Y	9	(yyy)	N	Watts LF007M3QT 3/4" (VU), Ames LF2000BM3 3/4" (VU)
DCDA	Ames	LFColt 300GV	####	H	########		Y	9	(zzz)	N	Watts LF007M3QT 3/4" (H), Ames LF2000BM3 3/4" (H)
DCDA	Ames	LFColt 300GV	####	VU	########		Y	9	(zzz)	N	Watts LF007M3QT 3/4" (VU), Ames LF2000BM3 3/4" (VU)
DCDA	Ames	LFColt 300GV	#	H	########		Y	9	(zzz)	N	Watts LF007M3QT 3/4" (H), Ames LF2000BM3 3/4" (H)
DCDA	Ames	LFColt 300GV	#	VU	########		Y	9	(zzz)	N	Watts LF007M3QT 3/4" (VU), Ames LF2000BM3 3/4" (VU)
DCDA	Ames	LFColt 300GV	#	H	########		Y	9	(zzz)	N	Watts LF007M3QT 3/4" (H), Ames LF2000BM3 3/4" (H)
DCDA	Ames	LFColt 300GV	#	VU	########		Y	9	(zzz)	N	Watts LF007M3QT 3/4" (VU), Ames LF2000BM3 3/4" (VU)
DCDA	Ames	LFColt 300GV	#	H	########		Y	9	(zzz)	N	Watts LF007M3QT 3/4" (H), Ames LF2000BM3 3/4" (H)
DCDA	Ames	LFColt 300GV	#	VU	########		Y	9	(zzz)	N	Watts LF007M3QT 3/4" (VU), Ames LF2000BM3 3/4" (VU)
DCDA	Ames	LFColt 300GV	#	H	########		Y	9	(zzz)	N	Watts LF007M3QT 3/4" (H), Ames LF2000BM3 3/4" (H)
DCDA	Ames	LFColt 300GV	##	H	########		Y	9	(zzz)	N	Watts LF007M3QT 3/4" (H), Ames LF2000BM3 3/4" (H)
DCDA	Ames	LFColt 300GV	##	VU	########		Y	9	(zzz)	N	Watts LF007M3QT 3/4" (VU), Ames LF2000BM3 3/4" (VU)
DCDA	Ames	LFColt 300NBF	####	VUVU	########		Y	9	(yyy)	N	Watts LF007M3QT 3/4" (H), Ames LF2000BM3 3/4" (H)
DCDA	Ames	LFColt 300NBF	#	VUVU	########		Y	9	(yyy)	N	Watts LF007M3QT 3/4" (H), Ames LF2000BM3 3/4" (H)
DCDA	Ames	LFColt 300NBF	#	VUVU	########		Y	9	(yyy)	N	Watts LF007M3QT 3/4" (H), Ames LF2000BM3 3/4" (H)
DCDA	Ames	LFColt 300NBF	#	VUVU	########		Y	9	(yyy)	N	Watts LF007M3QT 3/4" (H), Ames LF2000BM3 3/4" (H)
DCDA	Ames	LFColt 300NBF	#	VUVU	########		Y	9	(yyy)	N	Watts LF007M3QT 3/4" (H), Ames LF2000BM3 3/4" (H)
DCDA	Ames	LFColt 300NBF	##	VUVU	########		Y	9	(yyy)	N	Watts LF007M3QT 3/4" (H), Ames LF2000BM3 3/4" (H)
DCDA	Ames	LFColt 300NGV	####	VUVU	########		Y	9	(zzz)	N	Watts LF007M3QT 3/4" (H), Ames LF2000BM3 3/4" (H)
DCDA	Ames	LFColt 300NGV	#	VUVU	########		Y	9	(zzz)	N	Watts LF007M3QT 3/4" (H), Ames LF2000BM3 3/4" (H)
DCDA	Ames	LFColt 300NGV	#	VUVU	########		Y	9	(zzz)	N	Watts LF007M3QT 3/4" (H), Ames LF2000BM3 3/4" (H)
DCDA	Ames	LFColt 300NGV	#	VUVU	########		Y	9	(zzz)	N	Watts LF007M3QT 3/4" (H), Ames LF2000BM3 3/4" (H)
DCDA	Ames	LFColt 300NGV	##	VUVU	########		Y	9	(zzz)	N	Watts LF007M3QT 3/4" (H), Ames LF2000BM3 3/4" (H)
DCDA	Ames	LFMaxim 300BF	####	H	########		Y	9	(yyy)	N	Watts LF007M3QT 3/4" (H), Ames LF2000BM3 3/4" (H)
DCDA	Ames	LFMaxim 300BF	####	VU	########		Y	9	(yyy)	N	Watts LF007M3QT 3/4" (VU), Ames LF2000BM3 3/4" (VU)
DCDA	Ames	LFMaxim 300BF	#	H	########		Y	9	(yyy)	N	Watts LF007M3QT 3/4" (H), Ames LF2000BM3 3/4" (H)
DCDA	Ames	LFMaxim 300BF	#	VU	########		Y	9	(yyy)	N	Watts LF007M3QT 3/4" (VU), Ames LF2000BM3 3/4" (VU)
DCDA	Ames	LFMaxim 300BF	#	H	########		Y	9	(yyy)	N	Watts LF007M3QT 3/4" (H), Ames LF2000BM3 3/4" (H)
DCDA	Ames	LFMaxim 300BF	#	VU	########		Y	9	(yyy)	N	Watts LF007M3QT 3/4" (VU), Ames LF2000BM3 3/4" (VU)
DCDA	Ames	LFMaxim 300BF	#	H	########		Y	9	(yyy)	N	Watts LF007M3QT 3/4" (H), Ames LF2000BM3 3/4" (H)
DCDA	Ames	LFMaxim 300BF	#	VU	########		Y	9	(yyy)	N	Watts LF007M3QT 3/4" (VU), Ames LF2000BM3 3/4" (VU)
DCDA	Ames	LFMaxim 300BF	#	H	########		Y	9	(yyy)	N	Watts LF007M3QT 3/4" (H), Ames LF2000BM3 3/4" (H)
DCDA	Ames	LFMaxim 300BF	#	VU	########		Y	9	(yyy)	N	Watts LF007M3QT 3/4" (VU), Ames LF2000BM3 3/4" (VU)

Type	Manufacturer	Model	Size	Orientation(s)	Approved	Renewed	≤0.25% Pb	Manual	Shutoffs	Spare Parts	Bypass
DCDA	Ames	LFMaxim 300BF	##	H	########		Y	9	(yyy)	N	Watts LF007M3QT 3/4" (H), Ames LF2000BM3 3/4" (H)
DCDA	Ames	LFMaxim 300BF	##	VU	########		Y	9	(yyy)	N	Watts LF007M3QT 3/4" (VU), Ames LF2000BM3 3/4" (VU)
DCDA	Ames	LFMaxim 300G	####	H	########		Y	9	(zzz)	N	Watts LF007M3QT 3/4" (H), Ames LF2000BM3 3/4" (H)
DCDA	Ames	LFMaxim 300G	####	VU	########		Y	9	(zzz)	N	Watts LF007M3QT 3/4" (VU), Ames LF2000BM3 3/4" (VU)
DCDA	Ames	LFMaxim 300G	#	H	########		Y	9	(zzz)	N	Watts LF007M3QT 3/4" (H), Ames LF2000BM3 3/4" (H)
DCDA	Ames	LFMaxim 300G	#	VU	########		Y	9	(zzz)	N	Watts LF007M3QT 3/4" (VU), Ames LF2000BM3 3/4" (VU)
DCDA	Ames	LFMaxim 300G	#	H	########		Y	9	(zzz)	N	Watts LF007M3QT 3/4" (H), Ames LF2000BM3 3/4" (H)
DCDA	Ames	LFMaxim 300G	#	VU	########		Y	9	(zzz)	N	Watts LF007M3QT 3/4" (VU), Ames LF2000BM3 3/4" (VU)
DCDA	Ames	LFMaxim 300G	#	H	########		Y	9	(zzz)	N	Watts LF007M3QT 3/4" (H), Ames LF2000BM3 3/4" (H)
DCDA	Ames	LFMaxim 300G	#	VU	########		Y	9	(zzz)	N	Watts LF007M3QT 3/4" (VU), Ames LF2000BM3 3/4" (VU)
DCDA	Ames	LFMaxim 300G	#	H	########		Y	9	(zzz)	N	Watts LF007M3QT 3/4" (H), Ames LF2000BM3 3/4" (H)
DCDA	Ames	LFMaxim 300G	##	VU	########		Y	9	(zzz)	N	Watts LF007M3QT 3/4" (VU), Ames LF2000BM3 3/4" (VU)
DCDA	Ames	LFMaxim 300N	####	VUVU	########		Y	9	(yyy)	N	Watts LF007M3QT 3/4" (H), Ames LF2000BM3 3/4" (H)
DCDA	Ames	LFMaxim 300N	#	VUVU	########		Y	9	(yyy)	N	Watts LF007M3QT 3/4" (H), Ames LF2000BM3 3/4" (H)
DCDA	Ames	LFMaxim 300N	#	VUVU	########		Y	9	(yyy)	N	Watts LF007M3QT 3/4" (H), Ames LF2000BM3 3/4" (H)
DCDA	Ames	LFMaxim 300N	#	VUVU	########		Y	9	(yyy)	N	Watts LF007M3QT 3/4" (H), Ames LF2000BM3 3/4" (H)
DCDA	Ames	LFMaxim 300N	#	VUVU	########		Y	9	(yyy)	N	Watts LF007M3QT 3/4" (H), Ames LF2000BM3 3/4" (H)
DCDA	Ames	LFMaxim 300N	##	VUVU	########		Y	9	(yyy)	N	Watts LF007M3QT 3/4" (H), Ames LF2000BM3 3/4" (H)
DCDA	Ames	LFMaxim 300N	####	VUVU	########		Y	9	(zzz)	N	Watts LF007M3QT 3/4" (H), Ames LF2000BM3 3/4" (H)
DCDA	Ames	LFMaxim 300N	#	VUVU	########		Y	9	(zzz)	N	Watts LF007M3QT 3/4" (H), Ames LF2000BM3 3/4" (H)
DCDA	Ames	LFMaxim 300N	#	VUVU	########		Y	9	(zzz)	N	Watts LF007M3QT 3/4" (H), Ames LF2000BM3 3/4" (H)
DCDA	Ames	LFMaxim 300N	#	VUVU	########		Y	9	(zzz)	N	Watts LF007M3QT 3/4" (H), Ames LF2000BM3 3/4" (H)
DCDA	Ames	LFMaxim 300N	##	VUVU	########		Y	9	(zzz)	N	Watts LF007M3QT 3/4" (H), Ames LF2000BM3 3/4" (H)
DCDA	Ames	Maxim 300aBF	####	H	########	########	N	9	(yyy)	N	Ames 2000BM3 3/4" (H)
DCDA	Ames	Maxim 300aBF	####	VU	########	########	N	9	(yyy)	N	Ames 2000BM3 3/4" (VU)
DCDA	Ames	Maxim 300aBF	#	H	########	########	N	9	(yyy)	N	Ames 2000BM3 3/4" (H)
DCDA	Ames	Maxim 300aBF	#	VU	########	########	N	9	(yyy)	N	Ames 2000BM3 3/4" (VU)
DCDA	Ames	Maxim 300aBF	#	H	########	########	N	9	(yyy)	N	Ames 2000BM3 3/4 (H)
DCDA	Ames	Maxim 300aBF	#	VU	########	########	N	9	(yyy)	N	Ames 2000BM3 3/4" (VU)
DCDA	Ames	Maxim 300aGV	####	H	########	########	N	9	(zzz)	N	Ames 2000BM3 3/4" (H)
DCDA	Ames	Maxim 300aGV	####	VU	########	########	N	9	(zzz)	N	Ames 2000BM3 3/4" (VU)
DCDA	Ames	Maxim 300aGV	#	H	########	########	N	9	(zzz)	N	Ames 2000BM3 3/4" (H)
DCDA	Ames	Maxim 300aGV	#	VU	########	########	N	9	(zzz)	N	Ames 2000BM3 3/4" (VU)
DCDA	Ames	Maxim 300aGV	#	H	########	########	N	9	(zzz)	N	Ames 2000BM3 3/4 (H)
DCDA	Ames	Maxim 300aGV	#	VU	########	########	N	9	(zzz)	N	Ames 2000BM3 3/4" (VU)
DCDA	Ames	Maxim 300BF	####	H	########	########	N	9	(yyy)	N	Ames 2000BM3 3/4" (H)
DCDA	Ames	Maxim 300BF	####	VU	########	########	N	9	(yyy)	N	Ames 2000BM3 3/4" (VU)
DCDA	Ames	Maxim 300BF	#	H	########	########	N	9	(yyy)	N	Ames 2000BM3 3/4" (H)
DCDA	Ames	Maxim 300BF	#	VU	########	########	N	9	(yyy)	N	Ames 2000BM3 3/4" (VU)
DCDA	Ames	Maxim 300BF	#	H	########	########	N	9	(yyy)	N	Ames 2000BM3 3/4"(H)
DCDA	Ames	Maxim 300BF	#	Vu	########	########	N	9	(yyy)	N	Ames 2000BM3 3/4"(V)
DCDA	Ames	Maxim 300BF	#	H	########	########	N	9	(yyy)	N	Ames 2000BM3 3/4" (H & VU)
DCDA	Ames	Maxim 300BF	#	VU	########	########	N	9	(yyy)	N	Ames 2000BM3 3/4" (H & VU)
DCDA	Ames	Maxim 300BF	#	H	########	########	N	9	(yyy)	N	Watts 007M3QT 3/4" (H), Ames 2000 BM3 (H)
DCDA	Ames	Maxim 300BF	#	VU	########	########	N	9	(yyy)	N	Watts 007M3QT 3/4" (V), Ames 2000 BM3 (V)
DCDA	Ames	Maxim 300BF	##	H	########	########	N	9	(yyy)	N	Watts 007M3QT 3/4" (H), Ames 2000 BM3 (H)
DCDA	Ames	Maxim 300BF	##	VU	########	########	N	9	(yyy)	N	Watts 007M3QT 3/4" (V), Ames 2000 BM3 (V)
DCDA	Ames	Maxim 300GV	####	H	########	########	N	9	(zzz)	N	Ames 2000BM3 3/4" (H)
DCDA	Ames	Maxim 300GV	####	VU	########	########	N	9	(zzz)	N	Ames 2000BM3 3/4" (VU)
DCDA	Ames	Maxim 300GV	#	H	########	########	N	9	(zzz)	N	Ames 2000BM3 3/4" (H)
DCDA	Ames	Maxim 300GV	#	VU	########	########	N	9	(zzz)	N	Ames 2000BM3 3/4" (VU)
DCDA	Ames	Maxim 300GV	#	H	########	########	N	9	(zzz)	N	Ames 2000BM3 3/4"(H)
DCDA	Ames	Maxim 300GV	#	VU	########	########	N	9	(zzz)	N	Ames 2000BM3 3/4"(V)
DCDA	Ames	Maxim 300GV	#	H	########	########	N	9	(zzz)	N	Ames 2000BM3 3/4" (H & VU)
DCDA	Ames	Maxim 300GV	#	VU	########	########	N	9	(zzz)	N	Ames 2000BM3 3/4" (H & VU)
DCDA	Ames	Maxim 300GV	#	H	########	########	N	9	(zzz)	N	Watts 007M3QT 3/4" (H), Ames 2000 BM3 (H)
DCDA	Ames	Maxim 300GV	#	VU	########	########	N	9	(zzz)	N	Watts 007M3QT 3/4" (V), Ames 2000 BM3 (V)
DCDA	Ames	Maxim 300GV	##	H	########	########	N	9	(zzz)	N	Watts 007M3QT 3/4" (H), Ames 2000 BM3 (H)
DCDA	Ames	Maxim 300GV	##	VU	########	########	N	9	(zzz)	N	Watts 007M3QT 3/4" (V), Ames 2000 BM3 (V)
DCDA	Ames	Maxim 300NBF	####	VUVU	########	########	N	9	(yyy)	N	Ames 2000BM3 3/4" (H)
DCDA	Ames	Maxim 300NBF	#	VUVU	########	########	N	9	(yyy)	N	Ames 2000BM3 3/4" (H)
DCDA	Ames	Maxim 300NBF	#	VUVU	########	########	N	9	(yyy)	N	Ames 2000BM3 3/4" (H)
DCDA	Ames	Maxim 300NBF	#	VUVU	########	########	N	9	(yyy)	N	Ames 2000BM3 3/4" (H)
DCDA	Ames	Maxim 300NBF	#	VUVU	########		N	9	(yyy)	N	Ames 2000BM3 3/4" (H), Watts 007M3QT 3/4" (H)
DCDA	Ames	Maxim 300NBF	##	VUVU	########		N	9	(yyy)	N	Ames 2000BM3 3/4" (H), Watts 007M3QT 3/4" (H)
DCDA	Ames	Maxim 300NGV	####	VUVU	########	########	N	9	(zzz)	N	Ames 2000BM3 3/4" (H)
DCDA	Ames	Maxim 300NGV	#	VUVU	########	########	N	9	(zzz)	N	Ames 2000BM3 3/4" (H)
DCDA	Ames	Maxim 300NGV	#	VUVU	########	########	N	9	(zzz)	N	Ames 2000BM3 3/4" (H)
DCDA	Ames	Maxim 300NGV	#	VUVU	########	########	N	9	(zzz)	N	Ames 2000BM3 3/4" (H)
DCDA	Ames	Maxim 300NGV	#	VUVU	########		N	9	(zzz)	N	Ames 2000BM3 3/4" (H), Watts 007M3QT 3/4" (H)
DCDA	Ames	Maxim 300NGV	##	VUVU	########		N	9	(zzz)	N	Ames 2000BM3 3/4" (H), Watts 007M3QT 3/4" (H)
DCDA	Apollo/Conbra	4060003	#								
DCDA	Apollo/Conbra	4060003	#								
DCDA	Apollo/Conbra	40600000	#	H	########	########	N	8	uu,cc,mm	Y	Apollo/Conbraco 4010402 3/4" (H)
DCDA	Apollo/Conbra	10DCDA	##								
DCDA	Apollo/Conbra	10DCDA	##								
DCDA	Apollo/Conbra	2 1/2DCDA	####	H	########	########	N	9	(ll),mm	Y	Apollo/Conbraco 1/2DC 1/2" (H), Apollo/Conbraco W432100
DCDA	Apollo/Conbra	2 1/2DCDA	####	VU	########	########	N	9	(ll),mm	Y	Apollo/Conbraco 1/2DC 1/2" (VU), Apollo/Conbraco W432100
DCDA	Apollo/Conbra	2 1/2DCDA6	####	H	########	########	N	9	(mm)[#1SOV],(nnn)[#2SOV]	Y	Apollo/Conbraco 1/2DC 1/2" (H), Apollo/Conbraco W432100
DCDA	Apollo/Conbra	2 1/2DCDA6	####	VU	########	########	N	9	(mm)[#1SOV],(nnn)[#2SOV]	Y	Apollo/Conbraco 1/2DC 1/2" (VU), Apollo/Conbraco W432100
DCDA	Apollo/Conbra	2 1/2DCDA7	####	H	########	########	N	9	(mm)[#1SOV], (qqq)[#2SOV]	Y	Apollo/Conbraco 1/2DC 1/2" (H), Apollo/Conbraco W432100
DCDA	Apollo/Conbra	2 1/2DCDA7	####	VU	########	########	N	9	(mm)[#1SOV], (qqq)[#2SOV]	Y	Apollo/Conbraco 1/2DC 1/2" (VU), Apollo/Conbraco W432100
DCDA	Apollo/Conbra	2 1/2DCDA8	####	H	########	########	N	9	(ppp),qqq	Y	Apollo/Conbraco 1/2DC 1/2" (H), Apollo/Conbraco W432100
DCDA	Apollo/Conbra	2 1/2DCDA8	####	VU	########	########	N	9	(ppp),qqq	Y	Apollo/Conbraco 1/2DC 1/2" (VU), Apollo/Conbraco W432100
DCDA	Apollo/Conbra	2 1/2DCDAU	####	VUVU	########	########	N	9	(ll),mm	Y	Apollo/Conbraco 1/2DC 1/2" (H), Apollo/Conbraco W432100
DCDA	Apollo/Conbra	3DCDA	#	H	########	########	N	9	(ll),mm	Y	Apollo/Conbraco 1/2DC 1/2" (H), Apollo/Conbraco W432100
DCDA	Apollo/Conbra	3DCDA	#	VU	########	########	N	9	(ll),mm	Y	Apollo/Conbraco 1/2DC 1/2" (VU), Apollo/Conbraco W432100
DCDA	Apollo/Conbra	3DCDA6	#	H	########	########	N	9	(mm)[#1SOV],(nnn)[#2SOV]	Y	Apollo/Conbraco 1/2DC 1/2" (H), Apollo/Conbraco W432100
DCDA	Apollo/Conbra	3DCDA6	#	VU	########	########	N	9	(mm)[#1SOV],(nnn)[#2SOV]	Y	Apollo/Conbraco 1/2DC 1/2" (VU), Apollo/Conbraco W432100
DCDA	Apollo/Conbra	3DCDA7	#	H	########	########	N	9	(mm)[#1SOV], (qqq)[#2SOV]	Y	Apollo/Conbraco 1/2DC 1/2" (H), Apollo/Conbraco W432100
DCDA	Apollo/Conbra	3DCDA7	#	VU	########	########	N	9	(mm)[#1SOV], (qqq)[#2SOV]	Y	Apollo/Conbraco 1/2DC 1/2" (VU), Apollo/Conbraco W432100
DCDA	Apollo/Conbra	3DCDA8	#	H	########	########	N	9	(ppp),qqq	Y	Apollo/Conbraco 1/2DC 1/2" (H), Apollo/Conbraco W432100
DCDA	Apollo/Conbra	3DCDA8	#	VU	########	########	N	9	(ppp),qqq	Y	Apollo/Conbraco 1/2DC 1/2" (VU), Apollo/Conbraco W432100
DCDA	Apollo/Conbra	3DCDAU	#	VUVU	########	########	N	9	(ll),mm	Y	Apollo/Conbraco 1/2DC 1/2" (H), Apollo/Conbraco W432100
DCDA	Apollo/Conbra	40600C3	#	H	########	########	N	8	uu,cc,mm	Y	Apollo/Conbraco 4010402 3/4" (H)
DCDA	Apollo/Conbra	4060A03	#								
DCDA	Apollo/Conbra	4060A03	#								
DCDA	Apollo/Conbra	4060AC3	#	H	########	########	N	8	uu,cc,mm	Y	Apollo/Conbraco 4010402 3/4" (H)
DCDA	Apollo/Conbra	4060AC6	#	H	########	########	N	8	mm[#1SOV], nnn[#2SOV]	Y	Apollo/Conbraco 4010402 3/4" (H)
DCDA	Apollo/Conbra	4060AE3	#	H	########	########	N	8	uu,cc,mm	Y	Apollo/Conbraco 4010402 3/4" (H)
DCDA	Apollo/Conbra	4060AE6	#	H	########	########	N	8	mm[#1SOV], nnn[#2SOV]	Y	Apollo/Conbraco 4010402 3/4" (H)
DCDA	Apollo/Conbra	4060C03	#								
DCDA	Apollo/Conbra	4060C03	#								
DCDA	Apollo/Conbra	4060CC3	#	H	########	########	N	8	uu,cc,mm	Y	Apollo/Conbraco 4010402 3/4" (H)
DCDA	Apollo/Conbra	4060CC6	#	H	########	########	N	8	mm[#1SOV], nnn[#2SOV]	Y	Apollo/Conbraco 4010402 3/4" (H)
DCDA	Apollo/Conbra	4060CE3	#	H	########	########	N	8	uu,cc,mm	Y	Apollo/Conbraco 4010402 3/4" (H)
DCDA	Apollo/Conbra	4060CE6	#	H	########	########	N	8	mm[#1SOV], nnn[#2SOV]	Y	Apollo/Conbraco 4010402 3/4" (H)
DCDA	Apollo/Conbra	4060E03	#								
DCDA	Apollo/Conbra	4060E03	#								
DCDA	Apollo/Conbra	4060EC3	#	H	########	########	N	8	uu,cc,mm	Y	Apollo/Conbraco 4010402 3/4" (H)
DCDA	Apollo/Conbra	4060EC6	#	H	########	########	N	8	mm[#1SOV], nnn[#2SOV]	Y	Apollo/Conbraco 4010402 3/4" (H)
DCDA	Apollo/Conbra	4060EE3	#	H	########	########	N	8	uu,cc,mm	Y	Apollo/Conbraco 4010402 3/4" (H)
DCDA	Apollo/Conbra	4060EE6	#	H	########	########	N	8	mm[#1SOV], nnn[#2SOV]	Y	Apollo/Conbraco 4010402 3/4" (H)
DCDA	Apollo/Conbra	4060G03	##								
DCDA	Apollo/Conbra	4060G03	##								
DCDA	Apollo/Conbra	4060GC3	##	H	########	########	N	8	uu,cc,mm	Y	Apollo/Conbraco 4010402 3/4" (H)
DCDA	Apollo/Conbra	4060GC6	##	H	########	########	N	8	mm[#1SOV], nnn[#2SOV]	Y	Apollo/Conbraco 4010402 3/4" (H)
DCDA	Apollo/Conbra	4060GE3	##	H	########	########	N	8	uu,cc,mm	Y	Apollo/Conbraco 4010402 3/4" (H)
DCDA	Apollo/Conbra	4060GE6	##	H	########	########	N	8	mm[#1SOV], nnn[#2SOV]	Y	Apollo/Conbraco 4010402 3/4" (H)
DCDA	Apollo/Conbra	4DCDA	#	H	########	########	N	9	(ll),mm	Y	Apollo/Conbraco 1/2DC 1/2" (H), Apollo/Conbraco W432100
DCDA	Apollo/Conbra	4DCDA	#	VU	########	########	N	9	(ll),mm	Y	Apollo/Conbraco 1/2DC 1/2" (VU), Apollo/Conbraco W432100
DCDA	Apollo/Conbra	4DCDA6	#	H	########	########	N	9	(mm)[#1SOV],(nnn)[#2SOV]	Y	Apollo/Conbraco 1/2DC 1/2" (H), Apollo/Conbraco W432100

Type	Manufacturer	Model	Size	Orientation(s)	Approved	Renewed	≤0.25% Pb	Manual	Shutoffs	Spare Parts	Bypass
DCDA	Apollo/Conbra	4DCDA6	#	VU	########	########	N	9	(mm)[#1SOV],(nnn)[#2SOV]	Y	Apollo/Conbraco 1/2DC 1/2" (VU), Apollo/Conbraco W432100
DCDA	Apollo/Conbra	4DCDA7	#	H	########	########	N	9	(mm)[#1SOV], (qqq)[#2SOV]	Y	Apollo/Conbraco 1/2DC 1/2" (H), Apollo/Conbraco W432100
DCDA	Apollo/Conbra	4DCDA7	#	VU	########	########	N	9	(mm)[#1SOV], (qqq)[#2SOV]	Y	Apollo/Conbraco 1/2DC 1/2" (VU), Apollo/Conbraco W432100
DCDA	Apollo/Conbra	4DCDA8	#	H	########	########	N	9	(ppp),qqq	Y	Apollo/Conbraco 1/2DC 1/2" (H), Apollo/Conbraco W432100
DCDA	Apollo/Conbra	4DCDA8	#	VU	########	########	N	9	(ppp),qqq	Y	Apollo/Conbraco 1/2DC 1/2" (VU), Apollo/Conbraco W432100
DCDA	Apollo/Conbra	4DCDAU	#	VUVU	########	########	N	9	(ll),mm	Y	Apollo/Conbraco 1/2DC 1/2" (H), Apollo/Conbraco W432100
DCDA	Apollo/Conbra	4SG 600U	####								
DCDA	Apollo/Conbra	4SG 600U	#								
DCDA	Apollo/Conbra	4SG 600U	#								
DCDA	Apollo/Conbra	4SG 600U	#								
DCDA	Apollo/Conbra	4SG 600U	#								
DCDA	Apollo/Conbra	4SG-600	####								
DCDA	Apollo/Conbra	4SG-600	####								
DCDA	Apollo/Conbra	4SG-600	#								
DCDA	Apollo/Conbra	4SG-600	#								
DCDA	Apollo/Conbra	4SG-600	#								
DCDA	Apollo/Conbra	4SG-600	#								
DCDA	Apollo/Conbra	4SG-600	#								
DCDA	Apollo/Conbra	4SG-600	#								
DCDA	Apollo/Conbra	4SG-600	#								
DCDA	Apollo/Conbra	4SG-600	#								
DCDA	Apollo/Conbra	6DCDA	#	H	########	########	N	9	(ll),mm	Y	Apollo/Conbraco 1/2DC 1/2" (H), Apollo/Conbraco W432100
DCDA	Apollo/Conbra	6DCDA	#	VU	########	########	N	9	(ll),mm	Y	Apollo/Conbraco 1/2DC 1/2" (VU), Apollo/Conbraco W432100
DCDA	Apollo/Conbra	6DCDA6	#	H	########	########	N	9	(mm)[#1SOV],(nnn)[#2SOV]	Y	Apollo/Conbraco 1/2DC 1/2" (H), Apollo/Conbraco W432100
DCDA	Apollo/Conbra	6DCDA6	#	VU	########	########	N	9	(mm)[#1SOV],(nnn)[#2SOV]	Y	Apollo/Conbraco 1/2DC 1/2" (VU), Apollo/Conbraco W432100
DCDA	Apollo/Conbra	6DCDA7	#	H	########	########	N	9	(mm)[#1SOV], (qqq)[#2SOV]	Y	Apollo/Conbraco 1/2DC 1/2" (H), Apollo/Conbraco W432100
DCDA	Apollo/Conbra	6DCDA7	#	VU	########	########	N	9	(mm)[#1SOV], (qqq)[#2SOV]	Y	Apollo/Conbraco 1/2DC 1/2" (VU), Apollo/Conbraco W432100
DCDA	Apollo/Conbra	6DCDA8	#	H	########	########	N	9	(ppp),qqq	Y	Apollo/Conbraco 1/2DC 1/2" (H), Apollo/Conbraco W432100
DCDA	Apollo/Conbra	6DCDA8	#	VU	########	########	N	9	(ppp),qqq	Y	Apollo/Conbraco 1/2DC 1/2" (VU), Apollo/Conbraco W432100
DCDA	Apollo/Conbra	6DCDAU	#	VUVU	########	########	N	9	(ll),mm	Y	Apollo/Conbraco 1/2DC 1/2" (H), Apollo/Conbraco W432100
DCDA	Apollo/Conbra	8DCDA	#	H	########	########	N	9	(mm),ll	Y	Apollo/Conbraco 1/2DC 1/2" (H), Apollo/Conbraco W432100
DCDA	Apollo/Conbra	8DCDA	#	VU	########	########	N	9	(mm),ll	Y	Apollo/Conbraco 1/2DC 1/2" (VU), Apollo/Conbraco W432100
DCDA	Apollo/Conbra	8DCDA7	#	H	########	########	N	9	(mm)[#1SOV], (qqq)[#2SOV]	Y	Apollo/Conbraco 1/2DC 1/2" (H), Apollo/Conbraco W432100
DCDA	Apollo/Conbra	8DCDA7	#	VU	########	########	N	9	(mm)[#1SOV], (qqq)[#2SOV]	Y	Apollo/Conbraco 1/2DC 1/2" (VU), Apollo/Conbraco W432100
DCDA	Apollo/Conbra	8DCDA8	#	H	########	########	N	9	(ppp),qqq	Y	Apollo/Conbraco 1/2DC 1/2" (H), Apollo/Conbraco W432100
DCDA	Apollo/Conbra	8DCDA8	#	VU	########	########	N	9	(ppp),qqq	Y	Apollo/Conbraco 1/2DC 1/2" (VU), Apollo/Conbraco W432100
DCDA	Apollo/Conbra	DCDA4S	##	H	########	########	N	9	(mm),ll, xxxxx, zzzzz, bbbbbb, cccccc	N	Apollo/Conbraco 1/2DC 1/2" (H), Apollo/Conbraco W432100
DCDA	Apollo/Conbra	DCDA4S	##	VU	########	########	N	9	(mm),ll, xxxxx, zzzzz, bbbbbb, cccccc	N	Apollo/Conbraco 1/2DC 1/2" (VU), Apollo/Conbraco W432100
DCDA	Apollo/Conbra	DCDA4SG	####	H	########	########	N	9	(yyy)ppp,qqq,ttt,xxxxx,yyyyy,zzzzz,aaaaaa	N	Apollo/Conbraco 4S103 1/2" (H), Apollo/Conbraco W432100
DCDA	Apollo/Conbra	DCDA4SG	####	VU	########	########	N	9	(yyy)ppp,qqq,ttt,xxxxx,yyyyy,zzzzz,aaaaaa	N	Apollo/Conbraco 4S103 1/2" (VU), Apollo/Conbraco W432100
DCDA	Apollo/Conbra	DCDA4SG	#	H	########	########	N	9	(yyy)ppp,qqq,ttt,xxxxx,yyyyy,zzzzz,aaaaaa	N	Apollo/Conbraco 4S103 1/2" (H), Apollo/Conbraco W432100
DCDA	Apollo/Conbra	DCDA4SG	#	VU	########	########	N	9	(yyy)ppp,qqq,ttt,xxxxx,yyyyy,zzzzz,aaaaaa	N	Apollo/Conbraco 4S103 1/2" (VU), Apollo/Conbraco W432100
DCDA	Apollo/Conbra	DCDA4SG	#	H	########	########	N	9	(yyy)ppp,qqq,ttt,xxxxx,yyyyy,zzzzz,aaaaaa	N	Apollo/Conbraco 4S103 1/2" (H), Apollo/Conbraco W432100
DCDA	Apollo/Conbra	DCDA4SG	#	VU	########	########	N	9	(yyy)ppp,qqq,ttt,xxxxx,yyyyy,zzzzz,aaaaaa	N	Apollo/Conbraco 4S103 1/2" (VU), Apollo/Conbraco W432100
DCDA	Apollo/Conbra	DCDA4SG	#	H	########	########	N	9	(yyy)ppp,qqq,ttt,xxxxx,yyyyy,zzzzz,aaaaaa	N	Apollo/Conbraco 4S103 1/2" (H), Apollo/Conbraco W432100
DCDA	Apollo/Conbra	DCDA4SG	#	VU	########	########	N	9	(yyy)ppp,qqq,ttt,xxxxx,yyyyy,zzzzz,aaaaaa	N	Apollo/Conbraco 4S103 1/2" (VU), Apollo/Conbraco W432100
DCDA	Apollo/Conbra	DCDA4SG	#	H	########	########	N	9	(yyy)ppp,qqq,ttt,xxxxx,yyyyy,zzzzz,aaaaaa	N	Apollo/Conbraco 4S103 1/2" (H), Apollo/Conbraco W432100
DCDA	Apollo/Conbra	DCDA4SG	#	VU	########	########	N	9	(yyy)ppp,qqq,ttt,xxxxx,yyyyy,zzzzz,aaaaaa	N	Apollo/Conbraco 4S103 1/2" (VU), Apollo/Conbraco W432100
DCDA	Apollo/Conbra	DCDA4SGN	####	VUVU	########	########	N	9	(yyy)ppp,qqq,ttt	Y	Apollo/Conbraco 4S103 1/2" (H), Apollo/Conbraco W432100
DCDA	Apollo/Conbra	DCDA4SGN	#	VUVU	########	########	N	9	(yyy)ppp,qqq,ttt	Y	Apollo/Conbraco 4S103 1/2" (H), Apollo/Conbraco W432100
DCDA	Apollo/Conbra	DCDA4SGN	#	VUVU	########	########	N	9	(yyy)ppp,qqq,ttt	Y	Apollo/Conbraco 4S103 1/2" (H), Apollo/Conbraco W432100
DCDA	Apollo/Conbra	DCDA4SGN	#	VUVU	########	########	N	9	(yyy)ppp,qqq,ttt	Y	Apollo/Conbraco 4S103 1/2" (H), Apollo/Conbraco W432100
DCDA	Apollo/Conbra	DCDA4SGN	#	VUVU	########	########	N	9	(yyy)ppp,qqq,ttt	Y	Apollo/Conbraco 4S103 1/2" (H), Apollo/Conbraco W432100
DCDA	Apollo/Conbra	DCDALF4A	####	H	########		Y	10	(yyy), cccc, dddd, mmmm, nnnn, xxxxx, yyyyy, zzzzz, aaaaaa	N	Apollo DCLF4A 1/2" (H)
DCDA	Apollo/Conbra	DCDALF4A	####	VU	########		Y	10	(yyy), cccc, dddd, mmmm, nnnn, xxxxx, yyyyy, zzzzz, aaaaaa	N	Apollo DCLF4A 1/2" (VU)
DCDA	Apollo/Conbra	DCDALF4A	#	H	########		Y	10	(yyy), cccc, dddd, mmmm, nnnn, xxxxx, yyyyy, zzzzz, aaaaaa	N	Apollo DCLF4A 1/2" (H)
DCDA	Apollo/Conbra	DCDALF4A	#	VU	########		Y	10	(yyy), cccc, dddd, mmmm, nnnn, xxxxx, yyyyy, zzzzz, aaaaaa	N	Apollo DCLF4A 1/2" (VU)
DCDA	Apollo/Conbra	DCDALF4A	#	H	########		Y	10	(yyy), cccc, dddd, mmmm, nnnn, xxxxx, yyyyy, zzzzz, aaaaaa	N	Apollo DCLF4A 1/2" (H)
DCDA	Apollo/Conbra	DCDALF4A	#	VU	########		Y	10	(yyy), cccc, dddd, mmmm, nnnn, xxxxx, yyyyy, zzzzz, aaaaaa	N	Apollo DCLF4A 1/2" (VU)
DCDA	Apollo/Conbra	DCDALF4A	#	H	########		Y	10	(yyy), cccc, dddd, mmmm, nnnn, xxxxx, yyyyy, zzzzz, aaaaaa	N	Apollo DCLF4A 1/2" (H)
DCDA	Apollo/Conbra	DCDALF4A	#	VU	########		Y	10	(yyy), cccc, dddd, mmmm, nnnn, xxxxx, yyyyy, zzzzz, aaaaaa	N	Apollo DCLF4A 1/2" (VU)
DCDA	Apollo/Conbra	DCDALF4A	#	H	########		Y	10	(yyy), cccc, dddd, mmmm, nnnn, xxxxx, yyyyy, zzzzz, aaaaaa	N	Apollo DCLF4A 1/2" (H)
DCDA	Apollo/Conbra	DCDALF4A	#	VU	########		Y	10	(yyy), cccc, dddd, mmmm, nnnn, xxxxx, yyyyy, zzzzz, aaaaaa	N	Apollo DCLF4A 1/2" (VU)
DCDA	Apollo/Conbra	DCDALF4AN	####	VUVU	########		Y	10	(yyy), cccc, dddd, mmmm, nnnn, xxxxx, yyyyy, zzzzz, aaaaaa	N	Apollo DCLF4A 1/2" (H)
DCDA	Apollo/Conbra	DCDALF4AN	#	VUVU	########		Y	10	(yyy), cccc, dddd, mmmm, nnnn, xxxxx, yyyyy, zzzzz, aaaaaa	N	Apollo DCLF4A 1/2" (H)
DCDA	Apollo/Conbra	DCDALF4AN	#	VUVU	########		Y	10	(yyy), cccc, dddd, mmmm, nnnn, xxxxx, yyyyy, zzzzz, aaaaaa	N	Apollo DCLF4A 1/2" (H)
DCDA	Apollo/Conbra	DCDALF4AN	#	VUVU	########		Y	10	(yyy), cccc, dddd, mmmm, nnnn, xxxxx, yyyyy, zzzzz, aaaaaa	N	Apollo DCLF4A 1/2" (H)
DCDA	Apollo/Conbra	DCDALF4AN	#	VUVU	########		Y	10	(yyy), cccc, dddd, mmmm, nnnn, xxxxx, yyyyy, zzzzz, aaaaaa	N	
DCDA	Apollo/Conbra	DCDALF4AR	####	H	########		N	10	(cccc), dddd, mmmm, nnnn, xxxxx, yyyyy, zzzzz, aaaaaa	N	Apollo/Conbraco DCLF4A 1/2" (H)
DCDA	Apollo/Conbra	DCDALF4AR	####	VU	########		N	10	(cccc), dddd, mmmm, nnnn, xxxxx, yyyyy, zzzzz, aaaaaa	N	Apollo/Conbraco DCLF4A 1/2" (VU)
DCDA	Apollo/Conbra	DCDALF4AR	#	H	########		N	10	(cccc), dddd, mmmm, nnnn, xxxxx, yyyyy, zzzzz, aaaaaa	N	Apollo/Conbraco DCLF4A 1/2" (H)
DCDA	Apollo/Conbra	DCDALF4AR	#	VU	########		N	10	(cccc), dddd, mmmm, nnnn, xxxxx, yyyyy, zzzzz, aaaaaa	N	Apollo/Conbraco DCLF4A 1/2" (VU)
DCDA	Apollo/Conbra	DCDALF4AR	#	H	########		N	10	(cccc), dddd, mmmm, nnnn, xxxxx, yyyyy, zzzzz, aaaaaa	N	Apollo/Conbraco DCLF4A 1/2" (H)
DCDA	Apollo/Conbra	DCDALF4AR	4	VU	########		N	10	(cccc), dddd, mmmm, nnnn, xxxxx, yyyyy, zzzzz, aaaaaa	N	Apollo/Conbraco DCLF4A 1/2" (VU)
DCDA	Apollo/Conbra	DCDALF4AR	#	H	########		N	10	(cccc), dddd, mmmm, nnnn, xxxxx, yyyyy, zzzzz, aaaaaa	N	Apollo/Conbraco DCLF4A 1/2" (H)
DCDA	Apollo/Conbra	DCDALF4AR	6	VU	########		N	10	(cccc), dddd, mmmm, nnnn, xxxxx, yyyyy, zzzzz, aaaaaa	N	Apollo/Conbraco DCLF4A 1/2" (VU)
DCDA	Apollo/Conbra	DCDALF4AR	#	H	########		N	10	(cccc), dddd, mmmm, nnnn, xxxxx, yyyyy, zzzzz, aaaaaa	N	Apollo/Conbraco DCLF4A 1/2" (H)
DCDA	Apollo/Conbra	DCDALF4AR	#	VU	########		N	10	(cccc), dddd, mmmm, nnnn, xxxxx, yyyyy, zzzzz, aaaaaa	N	Apollo/Conbraco DCLF4A 1/2" (VU)
DCDA	Conbraco						N				
DCDA	Febco	856	####	H	########	########	N	8	(ff),mm,oo,pp,uu,zzz,cccc,ffff,gggg	Y	Febco 805YB 3/4" (H)
DCDA	Febco	856	####	VU	########	########	N	8	(ff),mm,oo,pp,uu,zzz,cccc,ffff,gggg	Y	Febco 805YB 3/4" (VU)
DCDA	Febco	856	#	H	########	########	N	8	(ff),mm,oo,pp,uu,zzz,cccc,ffff,gggg	Y	Febco 805YB 3/4" (H)
DCDA	Febco	856	#	VU	########	########	N	8	(ff),mm,oo,pp,uu,zzz,cccc,ffff,gggg	Y	Febco 805YB 3/4" (VU)
DCDA	Febco	856	#	H	########	########	N	8	(ff),mm,oo,pp,uu,nnn,zzz,cccc,ffff,gggg	Y	Febco 805YB 3/4" (H)
DCDA	Febco	856	#	VU	########	########	N	8	(ff),mm,oo,pp,uu,nnn,zzz,cccc,ffff,gggg	Y	Febco 805YB 3/4" (VU)
DCDA	Febco	856	#	H	########	########	N	8	(ff),mm,oo,pp,uu,nnn,zzz,cccc,ffff,gggg	Y	Febco 805YB 3/4" (H)
DCDA	Febco	856	#	VU	########	########	N	8	(ff),mm,oo,pp,uu,nnn,zzz,cccc,ffff,gggg	Y	Febco 805YB 3/4" (VU)
DCDA	Febco	856	#	H	########	########	N	8	(ff),mm,oo,pp,uu,nnn,zzz,cccc,ffff,gggg	Y	Febco 805YB 3/4" (H)
DCDA	Febco	856	#	VU	########	########	N	8	(ff),mm,oo,pp,uu,nnn,zzz,cccc,ffff,gggg	Y	Febco 805YB 3/4" (VU)
DCDA	Febco	858	#	H	########	########	N	9	bbb,jjjj	N	Watts 007QT 1/2" (H)
DCDA	Febco	858	#	VU	########	########	N	9	bbb,jjjj	N	Watts 007QT 1/2" (VU)
DCDA	Febco	858	####	H	########	########	N	8	(pp), gg, hh,ll, mm, oo, tt, uu, zz, fff	Y	Watts 007M2QT 3/4" (H), Watts 007M1QT 3/4" (H)
DCDA	Febco	858	####	VU	########	########	N	8	(pp), gg, hh,ll, mm, oo, tt, uu, zz, fff	Y	Watts 007M2QT 3/4" (VU)
DCDA	Febco	858	#	H	########	########	N	8	(pp), gg, hh,ll, mm, oo, tt, uu, zz, fff	Y	Watts 007M2QT 3/4" (H), Watts 007M1QT 3/4" (H)
DCDA	Febco	876	####	VUVU	########	########	N	8	ff,mm,oo,pp,uu,cccc,zzz,ffff,gggg	Y	Febco 805YB 3/4" (H)
DCDA	Febco	876	#	VUVU	########	########	N	8	ff,mm,oo,pp,uu,cccc,zzz,ffff,gggg	Y	Febco 805YB 3/4" (H)
DCDA	Febco	876	#	VUVU	########	########	N	8	ff,mm,oo,pp,uu,cccc,zzz,ffff,gggg	Y	Febco 805YB 3/4" (H)
DCDA	Febco	876	#	VUVU	########	########	N	8	ff,mm,oo,pp,uu,cccc,zzz,ffff,gggg	Y	Febco 805YB 3/4" (H)
DCDA	Febco	876	#	VUVU	########	########	N	8	ff,mm,oo,pp,uu,cccc,zzz,ffff,gggg	Y	Febco 805YB 3/4" (H)
DCDA	Febco	876	##	VUVU	########	########	N	8	ff,mm,oo,pp,uu,cccc,zzz,ffff,gggg	Y	Febco 805YB 3/4" (H)
DCDA	Febco	806 Type YD	#								
DCDA	Febco	806 Type YD	#								
DCDA	Febco	806 Type YD	#								
DCDA	Febco	806 Type YD	#								
DCDA	Febco	806 Type YD	##								
DCDA	Febco	806YD	#	H	########	########	N	8	(ff),mm,oo,pp,uu,zzz,ffff,gggg	Y	Febco 805Y 3/4" (H), Febco 805YB 3/4"(H)
DCDA	Febco	806YD	#	H	########	########	N	7	(ff),mm,oo,pp,uu,zzz,ffff,gggg	Y	Febco 805Y 3/4" (H), Febco 805YB 3/4"(H)
DCDA	Febco	806YD	#	H	########	########	N	7	(ff),mm,oo,pp,uu,zzz,ffff,gggg	Y	Febco 805Y 3/4" (H), Febco 805YB 3/4"(H)
DCDA	Febco	806YD	#	H	########	########	N	7	(ff),mm,oo,pp,uu,zzz,ffff,gggg	Y	Febco 805Y 3/4" (H), Febco 805YB 3/4"(H)
DCDA	Febco	806YD	##	H	########	########	N	7	(ff),mm,oo,pp,uu,zzz,ffff,gggg	Y	Febco 805Y 3/4" (H), Febco 805YB 3/4"(H)
DCDA	Febco	856ST	####	H	########	########	N	9	(ll),mm,oo,pp,zzz,cccc,dddd,eeee,ffff,gggg,nnnnn	N	Watts 719QT 3/4" (H)
DCDA	Febco	856ST	####	VU	########	########	N	9	(ll),mm,oo,pp,zzz,cccc,dddd,eeee,ffff,gggg,nnnnn	N	Watts 719QT 3/4" (VU)
DCDA	Febco	856ST	#	H	########	########	N	9	(ll),mm,oo,pp,zzz,cccc,dddd,eeee,ffff,gggg,nnnnn	N	Watts 719QT 3/4" (H)
DCDA	Febco	856ST	#	VU	########	########	N	9	(ll),mm,oo,pp,zzz,cccc,dddd,eeee,ffff,gggg,nnnnn	N	Watts 719QT 3/4" (VU)
DCDA	Febco	856ST	#	H	########	########	N	9	(ll),mm,oo,pp,zzz,cccc,dddd,eeee,ffff,gggg,nnnnn	N	Watts 719QT 3/4" (H)
DCDA	Febco	856ST	#	VU	########	########	N	9	(ll),mm,oo,pp,zzz,cccc,dddd,eeee,ffff,gggg,nnnnn	N	Watts 719QT 3/4" (VU)
DCDA	Febco	856ST	#	H	########	########	N	9	(ll),mm,oo,pp,zzz,cccc,dddd,eeee,ffff,gggg,nnnnn	N	Watts 719QT 3/4" (H)
DCDA	Febco	856ST	#	VU	########	########	N	9	(ll),mm,oo,pp,zzz,cccc,dddd,eeee,ffff,gggg,nnnnn	N	Watts 719QT 3/4" (VU)
DCDA	Febco	856ST	#	H	########	########	N	9	(ll),mm,oo,pp,zzz,cccc,dddd,eeee,ffff,gggg,nnnnn	N	Watts 719QT 3/4" (H)
DCDA	Febco	856ST	#	VU	########	########	N	9	(ll),mm,oo,pp,zzz,cccc,dddd,eeee,ffff,gggg,nnnnn	N	Watts 719QT 3/4" (VU)
DCDA	Febco	856ST	##	H	########		N	9	(ll),mm,oo,pp,zzz,cccc,dddd,eeee,ffff,gggg,nnnnn	N	Watts 719QT 3/4" (H)
DCDA	Febco	856ST	##	VU	########		N	9	(ll),mm,oo,pp,zzz,cccc,dddd,eeee,ffff,gggg,nnnnn	N	Watts 719QT 3/4" (H)
DCDA	Febco	876V	####	VUVU	########	########	N	8	(ff),ee,ll,mm,oo,pp,tt,uu,zzz,ffff,gggg	Y	Febco 805YB 3/4" (H)
DCDA	Febco	876V	####	VUVU	########	########	N	8	(ff),ee,ll,mm,oo,pp,tt,uu,zzz,ffff,gggg	Y	Febco 805YB 3/4" (H)
DCDA	Febco	876V	#	VUVU	########	########	N	8	(ff),ee,ll,mm,oo,pp,tt,uu,zzz,ffff,gggg	Y	Febco 805YB 3/4" (H)

Type	Manufacturer	Model	Size	Orientation(s)	Approved	Renewed	≤0.25% Pb	Manual	Shutoffs	Spare Parts	Bypass
DCDA	Febco	876V	#	VUVU	########	########	N	8	(ff),ee,ll,mm,oo,pp,tt,uu,zzz,ffff,gggg	Y	Febco 805YB 3/4" (H)
DCDA	Febco	876V	#	VUVU	########	########	N	8	(ff),ee,ll,mm,oo,pp,tt,uu,zzz,ffff,gggg	Y	Febco 805YB 3/4" (H)
DCDA	Febco	876V	#	VUVU	########	########	N	8	(ff),ee,ll,mm,oo,pp,tt,uu,zzz,ffff,gggg	Y	Febco 805YB 3/4" (H)
DCDA	Febco	876V	#	VUVU	########	########	N	8	(ff),ee,ll,mm,oo,pp,tt,uu,zzz,ffff,gggg	Y	Febco 805YB 3/4" (H)
DCDA	Febco	876V	#	VUVU	########	########	N	8	(ff),ee,ll,mm,oo,pp,tt,uu,zzz,ffff,gggg	Y	Febco 805YB 3/4" (H)
DCDA	Febco	876V	#	VUVU	########	########	N	8	(ff),mm,oo,pp,uu,zzz,ffff,gggg	Y	Febco 805YB 3/4" (H)
DCDA	Febco	876V	#	VUVU	########	########	N	8	(ff),mm,oo,pp,uu,zzz,ffff,gggg	Y	Febco 805YB 3/4" (H)
DCDA	Febco	876V	##	VUVU	########	########	N	8	(ee),ff,ll,mm,oo,pp,tt,uu,zzz,ffff,gggg	Y	Febco 805YB 3/4" (H)
DCDA	Febco	876V	##	VUVU	########	########	N	8	(ee),ff,ll,mm,oo,pp,tt,uu,zzz,ffff,gggg	Y	Febco 805YB 3/4" (H)
DCDA	Febco	876VST	####	VUVU	########	########	N	9	(ll),mm,oo,pp,zzz,cccc,dddd,eeee,ffff,gggg,nnnnn	N	Watts 719QT 3/4" (H)
DCDA	Febco	876VST	####	VUVU	########	########	N	9	(ll),mm,oo,pp,zzz,cccc,dddd,eeee,ffff,gggg,nnnnn	N	Watts 719QT 3/4" (H)
DCDA	Febco	876VST	#	VUVU	########	########	N	9	(ll),mm,oo,pp,zzz,cccc,dddd,eeee,ffff,gggg,nnnnn	N	Watts 719QT 3/4" (H)
DCDA	Febco	876VST	#	VUVU	########	########	N	9	(ll),mm,oo,pp,zzz,cccc,dddd,eeee,ffff,gggg,nnnnn	N	Watts 719QT 3/4" (H)
DCDA	Febco	876VST	#	VUVU	########	########	N	9	(ll),mm,oo,pp,zzz,cccc,dddd,eeee,ffff,gggg,nnnnn	N	Watts 719QT 3/4" (H)
DCDA	Febco	876VST	#	VUVU	########	########	N	9	(ll),mm,oo,pp,zzz,cccc,dddd,eeee,ffff,gggg,nnnnn	N	Watts 719QT 3/4" (H)
DCDA	Febco	876VST	#	VUVU	########	########	N	9	(ll),mm,oo,pp,zzz,cccc,dddd,eeee,ffff,gggg,nnnnn	N	Watts 719QT 3/4" (H)
DCDA	Febco	876VST	#	VUVU	########	########	N	9	(ll),mm,oo,pp,zzz,cccc,dddd,eeee,ffff,gggg,nnnnn	N	Watts 719QT 3/4" (H)
DCDA	Febco	876VST	#	VUVU	########	########	N	9	(ll),mm,oo,pp,zzz,cccc,dddd,eeee,ffff,gggg,nnnnn	N	Watts 719QT 3/4" (H)
DCDA	Febco	876VST	#	VUVU	########	########	N	9	(ll),mm,oo,pp,zzz,cccc,dddd,eeee,ffff,gggg,nnnnn	N	Watts 719QT 3/4" (H)
DCDA	Watts	007DCDA	#	H	########	########	N	9	(bbb),jjjj,rrrrr	N	Watts 007QT 1/2" (H)
DCDA	Watts	007DCDA	#	VU	########	########	N	9	(bbb),jjjj,rrrrr	N	Watts 007QT 1/2" (VU)
DCDA	Watts	007DCDA	####	H	########	########	N	8	(pp),gg,hh,ll,mm,oo,tt,uu,zz,ffff,gggg	N	Watts 007M2QT 3/4" (H), Watts 007M1QT 3/4" (H)
DCDA	Watts	007DCDA	####	VU	########	########	N	8	(pp),gg,hh,ll,mm,oo,tt,uu,zz,ffff,gggg	N	Watts 007M2QT 3/4" (VU)
DCDA	Watts	007DCDA	#	H	########	########	N	8	(pp),hh,mm,uu,zz,ffff,gggg	N	Watts 007M2QT 3/4" (H), Watts 007M1QT 3/4" (H)
DCDA	Watts	007DCDA-FP	#	H	########	########	N	9	(eeeee)	N	Ames 2000B 1/2" (H), Watts 007QT 1/2" (H)
DCDA	Watts	007M1DCDA	#	H	########		N	9	(eeeee), bbb, jjjj,rrrrr	N	Watts 007QT 1/2" (H)
DCDA	Watts	007M1DCDA	#	VU	########		N	9	(eeeee), bbb, jjjj,rrrrr	N	Watts 007QT 1/2" (VU)
DCDA	Watts	709DCDA	#	H	########	########	N	6	(pp),hh,uu,zz,eee,ffff,gggg	N	Watts 007QT 1/2" (H), Watts 007M1QT 3/4" (H), Watts 709Q
DCDA	Watts	709DCDA	#	H	########	########	N	6	(pp),hh,uu,zz,eee,ffff,gggg	N	Watts 007QT 1/2" (H), Watts 007M1QT 3/4" (H), Watts 709Q
DCDA	Watts	709DCDA	#	VU	########	########	N	8	(pp),hh,uu,zz,eee,ffff,gggg	N	Watts 007QT 1/2" (VU), Watts 007M2QT 3/4" (VU)
DCDA	Watts	709DCDA	#	H	########	########	N	6	(pp),hh,uu,zz,eee,ffff,gggg	N	Watts 007QT 1/2" (H), Watts 007M1QT 3/4" (H), Watts 709Q
DCDA	Watts	709DCDA	#	VU	########	########	N	8	(pp),hh,mm,uu,zz,eee,ffff,gggg	N	Watts 007QT 1/2" (VU)
DCDA	Watts	709DCDA	#	H	########	########	N	6	(pp),hh,mm,uu,zz,eee,ffff,gggg	N	Watts 007QT 1/2" (H), Watts 007M1QT 3/4" (H), Watts 709Q
DCDA	Watts	709DCDA	#	VU	########	########	N	8	(pp),hh,mm,uu,zz,eee,ffff,gggg	N	Watts 007QT 1/2" (VU)
DCDA	Watts	709DCDA	##	H	########	########	N	6	(pp),hh,mm,uu,zz,eee,ffff,gggg	N	Watts 007QT 1/2" (H), Watts 007M1QT 3/4" (H), Watts 709Q
DCDA	Watts	709DCDA	##	VU	########	########	N	8	(pp),hh,mm,uu,zz,eee,ffff,gggg	N	Watts 007QT 1/2" (VU)
DCDA	Watts	709DDC	#								
DCDA	Watts	709DDC	#								
DCDA	Watts	709DDC	#								
DCDA	Watts	709DDC	#								
DCDA	Watts	709DDC	#								
DCDA	Watts	709DDC	##								
DCDA	Watts	757aDCDABF	####	H	########	########	N	9	(yyy)	N	Watts 007M3QT 3/4" (H)
DCDA	Watts	757aDCDABF	####	VU	########	########	N	9	(yyy)	N	Watts 007M3QT 3/4" (VU)
DCDA	Watts	757aDCDABF	#	H	########	########	N	9	(yyy)	N	Watts 007M3QT 3/4" (H)
DCDA	Watts	757aDCDABF	#	VU	########	########	N	9	(yyy)	N	Watts 007M3QT 3/4" (VU)
DCDA	Watts	757aDCDABF	#	H	########	########	N	9	(yyy)	N	Watts 007M3QT 3/4" (H)
DCDA	Watts	757aDCDABF	#	VU	########	########	N	9	(yyy)	N	Watts 007M3QT 3/4" (VU)
DCDA	Watts	757aDCDABF	#	H	########	########	N	9	(yyy)	N	Watts 007M3QT 3/4 (H)
DCDA	Watts	757aDCDABF	#	VU	########	########	N	9	(yyy)	N	Watts 007M3QT 3/4" (VU)
DCDA	Watts	757aDCDAGV	####	H	########	########	N	9	(zzz)	N	Watts 007M3QT 3/4" (H)
DCDA	Watts	757aDCDAGV	####	VU	########	########	N	9	(zzz)	N	Watts 007M3QT 3/4" (VU)
DCDA	Watts	757aDCDAGV	#	H	########	########	N	9	(zzz)	N	Watts 007M3QT 3/4" (H)
DCDA	Watts	757aDCDAGV	#	VU	########	########	N	9	(zzz)	N	Watts 007M3QT 3/4" (VU)
DCDA	Watts	757aDCDAGV	#	H	########	########	N	9	(zzz)	N	Watts 007M3QT 3/4" (H)
DCDA	Watts	757aDCDAGV	#	VU	########	########	N	9	(zzz)	N	Watts 007M3QT 3/4" (VU)
DCDA	Watts	757aDCDAGV	#	H	########	########	N	9	(zzz)	N	Watts 007M3QT 3/4" (VU)
DCDA	Watts	757aDCDAGV	#	VU	########	########	N	9	(zzz)	N	Watts 007M3QT 3/4" (VU)
DCDA	Watts	757DCDABF	####	H	########	########	N	9	(yyy)	N	Watts 007M3QT 3/4" (H)
DCDA	Watts	757DCDABF	####	VU	########	########	N	9	(yyy)	N	Watts 007M3QT 3/4" (V)
DCDA	Watts	757DCDABF	#	H	########	########	N	9	(yyy)	N	Watts 007M3QT 3/4" (H)
DCDA	Watts	757DCDABF	#	VU	########	########	N	9	(yyy)	N	Watts 007M3QT 3/4" (V)
DCDA	Watts	757DCDABF	#	H	########	########	N	9	(yyy)	N	Watts 007M3QT 3/4" (H)
DCDA	Watts	757DCDABF	#	VU	########	########	N	9	(yyy)	N	Watts 007M3QT 3/4" (V)
DCDA	Watts	757DCDABF	#	H	########	########	N	9	(yyy)	N	Watts 007M3QT 3/4" (H)
DCDA	Watts	757DCDABF	#	VU	########	########	N	9	(yyy)	N	Watts 007M3QT 3/4" (VU)
DCDA	Watts	757DCDABF	#	H	########	########	N	9	(yyy)	N	Watts 007M3QT 3/4" (H & VU)
DCDA	Watts	757DCDABF	#	VU	########	########	N	9	(yyy)	N	Watts 007M3QT 3/4" (H & VU)
DCDA	Watts	757DCDABF	##	H	########	########	N	9	(yyy)	N	Watts 007M3QT 3/4" (H), Ames 2000 BM3 (H)
DCDA	Watts	757DCDABF	##	VU	########	########	N	9	(yyy)	N	Watts 007M3QT 3/4" (V), Ames 2000 BM3 (V)
DCDA	Watts	757DCDAGV	####	H	########	########	N	9	(zzz)	N	Watts 007M3QT 3/4" (H)
DCDA	Watts	757DCDAGV	####	VU	########	########	N	9	(zzz)	N	Watts 007M3QT 3/4" (V)
DCDA	Watts	757DCDAGV	#	H	########	########	N	9	(zzz)	N	Watts 007M3QT 3/4" (H)
DCDA	Watts	757DCDAGV	#	VU	########	########	N	9	(zzz)	N	Watts 007M3QT 3/4" (V)
DCDA	Watts	757DCDAGV	#	H	########	########	N	9	(zzz)	N	Watts 007M3QT 3/4" (H)
DCDA	Watts	757DCDAGV	#	VU	########	########	N	9	(zzz)	N	Watts 007M3QT 3/4" (V)
DCDA	Watts	757DCDAGV	#	H	########	########	N	9	(zzz)	N	Watts 007M3QT 3/4" (H)
DCDA	Watts	757DCDAGV	#	VU	########	########	N	9	(zzz)	N	Watts 007M3QT 3/4" (VU)
DCDA	Watts	757DCDAGV	#	H	########	########	N	9	(zzz)	N	Watts 007M3QT 3/4" (H & VU)
DCDA	Watts	757DCDAGV	#	VU	########	########	N	9	(zzz)	N	Watts 007M3QT 3/4" (H & VU)
DCDA	Watts	757DCDAGV	##	H	########	########	N	9	(zzz)	N	Watts 007M3QT 3/4" (H), Ames 2000 BM3 (H)
DCDA	Watts	757DCDAGV	##	VU	########	########	N	9	(zzz)	N	Watts 007M3QT 3/4" (V), Ames 2000 BM3 (V)
DCDA	Watts	757NDCDABF	####	VUVU	########	########	N	9	(yyy)	N	Watts 007M3QT 3/4" (H)
DCDA	Watts	757NDCDABF	#	VUVU	########	########	N	9	(yyy)	N	Watts 007M3QT 3/4" (H)
DCDA	Watts	757NDCDABF	#	VUVU	########	########	N	9	(yyy)	N	Watts 007M3QT 3/4" (H)
DCDA	Watts	757NDCDABF	#	VUVU	########	########	N	9	(yyy)	N	Watts 007M3QT 3/4" (H)
DCDA	Watts	757NDCDABF	#	VUVU	########	########	N	9	(yyy)	N	Watts 007M3QT 3/4" (H)
DCDA	Watts	757NDCDABF	##	VUVU	########		N	9	(yyy)	N	Watts 007M3QT 3/4" (H), Ames 2000BM3 3/4" (H)
DCDA	Watts	757NDCDAGV	####	VUVU	########	########	N	9	(zzz)	N	Watts 007M3QT 3/4" (H)
DCDA	Watts	757NDCDAGV	#	VUVU	########	########	N	9	(zzz)	N	Watts 007M3QT 3/4" (H)
DCDA	Watts	757NDCDAGV	#	VUVU	########	########	N	9	(zzz)	N	Watts 007M3QT 3/4" (H)
DCDA	Watts	757NDCDAGV	#	VUVU	########	########	N	9	(zzz)	N	Watts 007M3QT 3/4" (H)
DCDA	Watts	757NDCDAGV	#	VUVU	########	########	N	9	(zzz)	N	Watts 007M3QT 3/4" (H)
DCDA	Watts	757NDCDAGV	##	VUVU	########		N	9	(zzz)	N	Watts 007M3QT 3/4" (H), Ames 2000BM3 3/4" (H)
DCDA	Watts	767aDCDABF	####	H	########	########	N	9	(yyy)	N	Watts 007M3QT 3/4" (H)
DCDA	Watts	767aDCDABF	####	VU	########	########	N	9	(yyy)	N	Watts 007M3QT 3/4" (VU)
DCDA	Watts	767aDCDABF	#	H	########	########	N	9	(yyy)	N	Watts 007M3QT 3/4" (H)
DCDA	Watts	767aDCDABF	#	VU	########	########	N	9	(yyy)	N	Watts 007M3QT 3/4" (VU)
DCDA	Watts	767aDCDABF	#	H	########	########	N	9	(yyy)	N	Watts 007M3QT 3/4" (VU)
DCDA	Watts	767aDCDABF	#	VU	########	########	N	9	(yyy)	N	Watts 007M3QT 3/4" (VU)
DCDA	Watts	767aDCDAGV	####	H	########	########	N	9	(zzz)	N	Watts 007M3QT 3/4" (H)
DCDA	Watts	767aDCDAGV	####	VU	########	########	N	9	(zzz)	N	Watts 007M3QT 3/4" (VU)
DCDA	Watts	767aDCDAGV	#	H	########	########	N	9	(zzz)	N	Watts 007M3QT 3/4" (H)
DCDA	Watts	767aDCDAGV	#	VU	########	########	N	9	(zzz)	N	Watts 007M3QT 3/4" (VU)
DCDA	Watts	767aDCDAGV	#	H	########	########	N	9	(zzz)	N	Watts 007M3QT 3/4" (H)
DCDA	Watts	767aDCDAGV	#	VU	########	########	N	9	(zzz)	N	Watts 007M3QT 3/4" (VU)
DCDA	Watts	767DCDABF	####	H	########	########	N	9	(yyy)	N	Watts 007M3QT 3/4" (H)
DCDA	Watts	767DCDABF	####	VU	########	########	N	9	(yyy)	N	Watts 007M3QT 3/4" (V)
DCDA	Watts	767DCDABF	#	H	########	########	N	9	(yyy)	N	Watts 007M3QT 3/4" (H)
DCDA	Watts	767DCDABF	#	VU	########	########	N	9	(yyy)	N	Watts 007M3QT 3/4" (V)
DCDA	Watts	767DCDABF	#	H	########	########	N	9	(yyy)	N	Watts 007M3QT 3/4" (H)
DCDA	Watts	767DCDABF	#	VU	########	########	N	9	(yyy)	N	Watts 007M3QT 3/4" (VU)
DCDA	Watts	767DCDABF	#	H	########	########	N	9	(yyy)	N	Watts 007M3QT 3/4" (H & VU)
DCDA	Watts	767DCDABF	#	VU	########	########	N	9	(yyy)	N	Watts 007M3QT 3/4" (H & VU)
DCDA	Watts	767DCDABF	#	H	########	########	N	9	(yyy)	N	Watts 007M3QT 3/4" (H), Ames 2000 BM3 (H)
DCDA	Watts	767DCDABF	#	VU	########	########	N	9	(yyy)	N	Watts 007M3QT 3/4" (V), Ames 2000 BM3 (V)
DCDA	Watts	767DCDABF	##	H	########	########	N	9	(yyy)	N	Watts 007M3QT 3/4" (H), Ames 2000 BM3 (H)
DCDA	Watts	767DCDABF	##	VU	########	########	N	9	(yyy)	N	Watts 007M3QT 3/4" (V), Ames 2000 BM3 (V)
DCDA	Watts	767DCDAGV	####	H	########	########	N	9	(zzz)	N	Watts 007M3QT 3/4" (H)
DCDA	Watts	767DCDAGV	####	VU	########	########	N	9	(zzz)	N	Watts 007M3QT 3/4" (V)
DCDA	Watts	767DCDAGV	#	H	########	########	N	9	(zzz)	N	Watts 007M3QT 3/4" (H)
DCDA	Watts	767DCDAGV	#	VU	########	########	N	9	(zzz)	N	Watts 007M3QT 3/4" (V)
DCDA	Watts	767DCDAGV	#	H	########	########	N	9	(zzz)	N	Watts 007M3QT 3/4" (H)
DCDA	Watts	767DCDAGV	#	VU	########	########	N	9	(zzz)	N	Watts 007M3QT 3/4" (VU)
DCDA	Watts	767DCDAGV	#	H	########	########	N	9	(zzz)	N	Watts 007M3QT 3/4" (H & VU)

Type	Manufacturer	Model	Size	Orientation(s)	Approved	Renewed	≤0.25% Pb	Manual	Shutoffs	Spare Parts	Bypass
DCDA	Watts	767DCDAGV	#	VU	########	########	N	9	(zzz)	N	Watts 007M3QT 3/4" (H & VU)
DCDA	Watts	767DCDAGV	#	H	########	########	N	9	(zzz)	N	Watts 007M3QT 3/4" (H), Ames 2000 BM3 (H)
DCDA	Watts	767DCDAGV	#	VU	########	########	N	9	(zzz)	N	Watts 007M3QT 3/4" (V), Ames 2000 BM3 (V)
DCDA	Watts	767DCDAGV	##	H	########	########	N	9	(zzz)	N	Watts 007M3QT 3/4" (H), Ames 2000 BM3 (H)
DCDA	Watts	767DCDAGV	##	VU	########	########	N	9	(zzz)	N	Watts 007M3QT 3/4" (V), Ames 2000 BM3 (V)
DCDA	Watts	767NDCDABF	####	VUVU	########	########	N	9	(yyy)	N	Watts 007M3QT 3/4" (H)
DCDA	Watts	767NDCDABF	#	VUVU	########	########	N	9	(yyy)	N	Watts 007M3QT 3/4" (H)
DCDA	Watts	767NDCDABF	#	VUVU	########	########	N	9	(yyy)	N	Watts 007M3QT 3/4" (H)
DCDA	Watts	767NDCDABF	#	VUVU	########	########	N	9	(yyy)	N	Watts 007M3QT 3/4" (H)
DCDA	Watts	767NDCDABF	#	VUVU	########		N	9	(yyy)	N	Watts 007M3QT 3/4" (H), Ames 2000BM3 3/4" (H)
DCDA	Watts	767NDCDABF	##	VUVU	########		N	9	(yyy)	N	Watts 007M3QT 3/4" (H), Ames 2000BM3 3/4" (H)
DCDA	Watts	767NDCDAGV	####	VUVU	########	########	N	9	(zzz)	N	Watts 007M3QT 3/4" (H)
DCDA	Watts	767NDCDAGV	#	VUVU	########	########	N	9	(zzz)	N	Watts 007M3QT 3/4" (H)
DCDA	Watts	767NDCDAGV	#	VUVU	########	########	N	9	(zzz)	N	Watts 007M3QT 3/4" (H)
DCDA	Watts	767NDCDAGV	#	VUVU	########	########	N	9	(zzz)	N	Watts 007M3QT 3/4" (H)
DCDA	Watts	767NDCDAGV	#	VUVU	########		N	9	(zzz)	N	Watts 007M3QT 3/4" (H), Ames 2000BM3 3/4" (H)
DCDA	Watts	767NDCDAGV	##	VUVU	########		N	9	(zzz)	N	Watts 007M3QT 3/4" (H), Ames 2000BM3 3/4" (H)
DCDA	Watts	770DCDA	#	H	########	########	N	8	pp,hh,mm,uu,zz	Y	Watts 007M1QT 3/4" (H)
DCDA	Watts	770DCDA	#	H	########	########	N	8	oo,gg,hh,ll,mm,pp,tt,uu	Y	Watts 007M1QT 3/4" (H)
DCDA	Watts	772DCDA	#	H	########	########	N	8	oo	Y	Watts 007M1QT 3/4" (H)
DCDA	Watts	772DCDA	##	H	########	########	N	8	oo	Y	Watts 007M1QT 3/4" (H)
DCDA	Watts	774DCDA	####	H	########	########	N	8	(uu),ee,ff,gg,hh,ll,mm,oo,pp,tt,ccc,ddd,ffff,gggg	N	Watts 007M2QT 3/4: (H), Ames 2000B 3/4" (H)
DCDA	Watts	774DCDA	#	H	########	########	N	8	(uu),ee,ff,gg,hh,ll,mm,oo,pp,tt,ccc,ddd,ffff,gggg	N	Watts 007M2QT 3/4: (H), Ames 2000B 3/4" (H)
DCDA	Watts	774DCDA	#	H	########	########	N	8	(uu),ee,ff,gg,hh,ll,mm,oo,pp,tt,ccc,ddd,ffff,gggg	N	Watts 007M2QT 3/4: (H), Ames 2000B 3/4" (H)
DCDA	Watts	774DCDA	#	H	########	########	N	8	(uu),ee,ff,gg,hh,ll,mm,oo,pp,tt,ccc,ddd,ffff,gggg	N	Watts 007M1QT 3/4" (H)
DCDA	Watts	774DCDA	#	H	########	########	N	8	(mm),ee,ff,gg,hh,ll,oo,pp,tt,uu,ccc,ddd,ffff,gggg	N	Watts 007M2QT 3/4: (H), Ames 2000B 3/4" (H)
DCDA	Watts	774DCDA	##	H	########	########	N	8	(ll),mm,ffff,gggg	N	Watts 007M2QT 3/4: (H), Ames 2000B 3/4" (H)
DCDA	Watts	774DCDA	##	H	########	########	N	9	(mm), ll	N	Ames 2000BM3 3/4" (H); Watts 007M3QT 3/4" (H)
DCDA	Watts	774DCDA	##	VU	########	########	N	9	(mm), ll	N	Ames 2000BM3 3/4" (H); Watts 007M3QT 3/4" (H)
DCDA	Watts	774DCDA-1	##	H	########	########	N	9	(mm), ll	N	Ames 200B 3/4" (H); Watts 719QT 3/4" (H)
DCDA	Watts	774DCDA-1	##	VU	########	########	N	9	(mm), ll	N	Ames 200B 3/4" (VU); Watts 719QT 3/4" (VU)
DCDA	Watts	774XDCDA	####	H	########	########	N	8	(mm),ee,ff,gg,hh,ll,oo,pp,tt,uu,ccc,ddd,ffff,gggg	N	Watts 007M2QT 3/4: (H), Ames 2000B 3/4" (H)
DCDA	Watts	774XDCDA	#	H	########	########	N	8	(uu),ee,ff,gg,hh,ll,mm,oo,pp,tt,uu,ccc,ddd,ffff,gggg	N	Watts 007M2QT 3/4: (H), Ames 2000B 3/4" (H)
DCDA	Watts	774XDCDA	#	H	########	########	N	8	(uu),ee,ff,gg,hh,ll,mm,oo,pp,tt,ccc,ddd,ffff,gggg	N	Watts 007M1QT 3/4" (H)
DCDA	Watts	LF757DCDABF	####	H	########		Y	9	(yyy)	N	Watts LF007M3QT 3/4" (H)
DCDA	Watts	LF757DCDABF	####	VU	########		Y	9	(yyy)	N	Watts LF007M3QT 3/4" (VU)
DCDA	Watts	LF757DCDABF	#	H	########		Y	9	(yyy)	N	Watts LF007M3QT 3/4" (H)
DCDA	Watts	LF757DCDABF	#	VU	########		Y	9	(yyy)	N	Watts LF007M3QT 3/4" (VU)
DCDA	Watts	LF757DCDABF	#	H	########		Y	9	(yyy)	N	Watts LF007M3QT 3/4" (H)
DCDA	Watts	LF757DCDABF	#	VU	########		Y	9	(yyy)	N	Watts LF007M3QT 3/4" (VU)
DCDA	Watts	LF757DCDABF	#	H	########		Y	9	(yyy)	N	Watts LF007M3QT 3/4" (H)
DCDA	Watts	LF757DCDABF	#	VU	########		Y	9	(yyy)	N	Watts LF007M3QT 3/4" (VU)
DCDA	Watts	LF757DCDABF	#	H	########		Y	9	(yyy)	N	Watts LF007M3QT 3/4" (H)
DCDA	Watts	LF757DCDABF	#	VU	########		Y	9	(yyy)	N	Watts LF007M3QT 3/4" (VU)
DCDA	Watts	LF757DCDABF	##	H	########		Y	9	(yyy)	N	Watts LF007M3QT 3/4" (H)
DCDA	Watts	LF757DCDABF	##	VU	########		Y	9	(yyy)	N	Watts LF007M3QT 3/4" (VU)
DCDA	Watts	LF757DCDAGV	####	H	########		Y	9	(zzz)	N	Watts LF007M3QT 3/4" (H)
DCDA	Watts	LF757DCDAGV	####	VU	########		Y	9	(zzz)	N	Watts LF007M3QT 3/4" (VU)
DCDA	Watts	LF757DCDAGV	#	H	########		Y	9	(zzz)	N	Watts LF007M3QT 3/4" (H)
DCDA	Watts	LF757DCDAGV	#	VU	########		Y	9	(zzz)	N	Watts LF007M3QT 3/4" (VU)
DCDA	Watts	LF757DCDAGV	#	H	########		Y	9	(zzz)	N	Watts LF007M3QT 3/4" (H)
DCDA	Watts	LF757DCDAGV	#	VU	########		Y	9	(zzz)	N	Watts LF007M3QT 3/4" (VU)
DCDA	Watts	LF757DCDAGV	#	H	########		Y	9	(zzz)	N	Watts LF007M3QT 3/4" (H)
DCDA	Watts	LF757DCDAGV	#	VU	########		Y	9	(zzz)	N	Watts LF007M3QT 3/4" (VU)
DCDA	Watts	LF757DCDAGV	#	H	########		Y	9	(zzz)	N	Watts LF007M3QT 3/4" (H)
DCDA	Watts	LF757DCDAGV	#	VU	########		Y	9	(zzz)	N	Watts LF007M3QT 3/4" (VU)
DCDA	Watts	LF757DCDAGV	##	H	########		Y	9	(zzz)	N	Watts LF007M3QT 3/4" (H)
DCDA	Watts	LF757DCDAGV	##	VU	########		Y	9	(zzz)	N	Watts LF007M3QT 3/4" (VU)
DCDA	Watts	LF757NDCDAB	####	VUVU	########		Y	9	(yyy)	N	Watts LF007M3QT 3/4" (H)
DCDA	Watts	LF757NDCDAB	#	VUVU	########		Y	9	(yyy)	N	Watts LF007M3QT 3/4" (H)
DCDA	Watts	LF757NDCDAB	#	VUVU	########		Y	9	(yyy)	N	Watts LF007M3QT 3/4" (H)
DCDA	Watts	LF757NDCDAB	#	VUVU	########		Y	9	(yyy)	N	Watts LF007M3QT 3/4" (H)
DCDA	Watts	LF757NDCDAB	#	VUVU	########		Y	9	(yyy)	N	Watts LF007M3QT 3/4" (H)
DCDA	Watts	LF757NDCDAB	##	VUVU	########		Y	9	(yyy)	N	Watts LF007M3QT 3/4" (H)
DCDA	Watts	LF757NDCDAG	####	VUVU	########		Y	9	(zzz)	N	Watts LF007M3QT 3/4" (H)
DCDA	Watts	LF757NDCDAG	#	VUVU	########		Y	9	(zzz)	N	Watts LF007M3QT 3/4" (H)
DCDA	Watts	LF757NDCDAG	#	VUVU	########		Y	9	(zzz)	N	Watts LF007M3QT 3/4" (H)
DCDA	Watts	LF757NDCDAG	#	VUVU	########		Y	9	(zzz)	N	Watts LF007M3QT 3/4" (H)
DCDA	Watts	LF757NDCDAG	#	VUVU	########		Y	9	(zzz)	N	Watts LF007M3QT 3/4" (H)
DCDA	Watts	LF757NDCDAG	##	VUVU	########		Y	9	(zzz)	N	Watts LF007M3QT 3/4" (H)
DCDA	Wilkins	350ADA	####	H	########	########	N	9	(qqq),ttt,yyy,zzz,uuuu,vvvv,xxxx,yyyy,kkkkk,lllll	N	Wilkins 950XLD 3/4" (H)
DCDA	Wilkins	350ADA	####	H	########		Y	9	(qqq),ttt,www,yyy,xxxx,yyyy,kkkkk,lllll	N	Wilkins 950XLD 3/4" (H)
DCDA	Wilkins	350ADA	####	VU	########	########	N	9	(qqq),ttt,yyy,zzz,uuuu,vvvv,xxxx,yyyy,kkkkk,lllll	N	Wilkins 950XLD 3/4" (VU)
DCDA	Wilkins	350ADA	####	VU	########		Y	9	(qqq),ttt,www,yyy,xxxx,yyyy,kkkkk,lllll	N	Wilkins 950XLD 3/4" (VU)
DCDA	Wilkins	350ADA	#	H	########	########	N	9	(qqq),ttt,yyy,zzz,uuuu,vvvv,xxxx,yyyy,kkkkk,lllll	N	Wilkins 950XLD 3/4" (H)
DCDA	Wilkins	350ADA	#	H	########		Y	9	(qqq),ttt,www,yyy,xxxx,yyyy,kkkkk,lllll	N	Wilkins 950XLD 3/4" (H)
DCDA	Wilkins	350ADA	#	VU	########	########	N	9	(qqq),ttt,yyy,zzz,uuuu,vvvv,xxxx,yyyy,kkkkk,lllll	N	Wilkins 950XLD 3/4" (VU)
DCDA	Wilkins	350ADA	#	VU	########		Y	9	(qqq),ttt,www,yyy,xxxx,yyyy,kkkkk,lllll	N	Wilkins 950XLD 3/4" (VU)
DCDA	Wilkins	350ADA	#	H	########	########	N	9	(qqq),ttt,www,yyy,zzz,eeee,uuuu,vvvv,xxxx,yyyy,kkkkk,lllll	N	Wilkins 950XLD 3/4" (H)
DCDA	Wilkins	350ADA	#	H	########		Y	9	(qqq),ttt,www,yyy,xxxx,yyyy,kkkkk,lllll	N	Wilkins 950XLD 3/4" (H)
DCDA	Wilkins	350ADA	#	VU	########	########	N	9	(qqq),ttt,www,yyy,zzz,eeee,uuuu,vvvv,xxxx,yyyy,kkkkk,lllll	N	Wilkins 950XLD 3/4" (VU)
DCDA	Wilkins	350ADA	#	VU	########		Y	9	(qqq),ttt,www,yyy,xxxx,yyyy,kkkkk,lllll	N	Wilkins 950XLD 3/4" (VU)
DCDA	Wilkins	350ADA	#	H	########	########	N	9	(qqq),ttt,www,yyy,zzz,eeee,uuuu,vvvv,xxxx,yyyy,kkkkk,lllll	N	Wilkins 950XLD 3/4" (H)
DCDA	Wilkins	350ADA	#	H	########		Y	9	(qqq),ttt,www,yyy,xxxx,yyyy,kkkkk,lllll	N	Wilkins 950XLD 3/4" (H)
DCDA	Wilkins	350ADA	#	VU	########	########	N	9	(qqq),ttt,www,yyy,zzz,eeee,uuuu,vvvv,xxxx,yyyy,kkkkk,lllll	N	Wilkins 950XLD 3/4" (VU)
DCDA	Wilkins	350ADA	#	VU	########		Y	9	(qqq),ttt,www,yyy,xxxx,yyyy,kkkkk,lllll	N	Wilkins 950XLD 3/4" (VU)
DCDA	Wilkins	350ADA	##	H	########	########	N	9	(qqq),ttt,yyy,uuuu,vvvv,xxxx,yyyy,kkkkk,lllll	N	Wilkins 950XLD 3/4" (H)
DCDA	Wilkins	350ADA	##	H	########		Y	9	(qqq),ttt,www,yyy,xxxx,yyyy,kkkkk,lllll	N	Wilkins 950XLD 3/4" (H)
DCDA	Wilkins	350ADA	##	VU	########	########	N	9	(qqq),ttt,yyy,uuuu,vvvv,xxxx,yyyy,kkkkk,lllll	N	Wilkins 950XLD 3/4" (VU)
DCDA	Wilkins	350ADA	##	VU	########		Y	9	(qqq),ttt,www,yyy,xxxx,yyyy,kkkkk,lllll	N	Wilkins 950XLD 3/4" (VU)
DCDA	Wilkins	350ADAR	####	H	########	########	N	9	(qqq),ttt,yyy,zzz,uuuu,vvvv,xxxx,yyyy,kkkkk,lllll	N	Wilkins 950XLD 3/4" (H)
DCDA	Wilkins	350ADAR	####	H	########		Y	9	(qqq),ttt,www,yyy,xxxx,yyyy,kkkkk,lllll	N	Wilkins 950XLD 3/4" (H)
DCDA	Wilkins	350ADAR	####	VU	########	########	N	9	(qqq),ttt,yyy,zzz,uuuu,vvvv,xxxx,yyyy,kkkkk,lllll	N	Wilkins 950XLD 3/4" (VU)
DCDA	Wilkins	350ADAR	####	VU	########		Y	9	(qqq),ttt,www,yyy,xxxx,yyyy,kkkkk,lllll	N	Wilkins 950XLD 3/4" (VU)
DCDA	Wilkins	350ADAR	#	H	########	########	N	9	(qqq),ttt,yyy,zzz,uuuu,vvvv,xxxx,yyyy,kkkkk,lllll	N	Wilkins 950XLD 3/4" (H)
DCDA	Wilkins	350ADAR	#	H	########		Y	9	(qqq),ttt,www,yyy,xxxx,yyyy,kkkkk,lllll	N	Wilkins 950XLD 3/4" (H)
DCDA	Wilkins	350ADAR	#	VU	########	########	N	9	(qqq),ttt,yyy,zzz,uuuu,vvvv,xxxx,yyyy,kkkkk,lllll	N	Wilkins 950XLD 3/4" (VU)
DCDA	Wilkins	350ADAR	#	VU	########		Y	9	(qqq),ttt,www,yyy,xxxx,yyyy,kkkkk,lllll	N	Wilkins 950XLD 3/4" (VU)
DCDA	Wilkins	350ADAR	#	H	########	########	N	9	(qqq),ttt,www,yyy,zzz,eeee,uuuu,vvvv,xxxx,yyyy,kkkkk,lllll	N	Wilkins 950XLD 3/4" (VU)
DCDA	Wilkins	350ADAR	#	H	########		Y	9	(qqq),ttt,www,yyy,xxxx,yyyy,kkkkk,lllll	N	Wilkins 950XLD 3/4" (VU)
DCDA	Wilkins	350ADAR	#	VU	########	########	N	9	(qqq),ttt,www,yyy,zzz,eeee,uuuu,vvvv,xxxx,yyyy,kkkkk,lllll	N	Wilkins 950XLD 3/4" (H)
DCDA	Wilkins	350ADAR	#	VU	########		Y	9	(qqq),ttt,www,yyy,xxxx,yyyy,kkkkk,lllll	N	Wilkins 950XLD 3/4" (H)
DCDA	Wilkins	350ADAR	#	H	########	########	N	9	(qqq),ttt,www,yyy,zzz,eeee,uuuu,vvvv,xxxx,yyyy,kkkkk,lllll	N	Wilkins 950XLD 3/4" (VU)
DCDA	Wilkins	350ADAR	#	H	########		Y	9	(qqq),ttt,www,yyy,xxxx,yyyy,kkkkk,lllll	N	Wilkins 950XLD 3/4" (VU)
DCDA	Wilkins	350ADAR	#	VU	########	########	N	9	(qqq),ttt,www,yyy,zzz,eeee,uuuu,vvvv,xxxx,yyyy,kkkkk,lllll	N	Wilkins 950XLD 3/4" (H)
DCDA	Wilkins	350ADAR	#	VU	########		Y	9	(qqq),ttt,www,yyy,xxxx,yyyy,kkkkk,lllll	N	Wilkins 950XLD 3/4" (H)
DCDA	Wilkins	350ADAR	##	H	########	########	N	9	(qqq),ttt,www,yyy,zzz,eeee,uuuu,vvvv,xxxx,yyyy,kkkkk,lllll	N	Wilkins 950XLD 3/4" (VU)
DCDA	Wilkins	350ADAR	##	H	########		Y	9	(qqq),ttt,www,yyy,xxxx,yyyy,kkkkk,lllll	N	Wilkins 950XLD 3/4" (VU)
DCDA	Wilkins	350ADAR	##	VU	########	########	N	9	(qqq),ttt,www,yyy,zzz,eeee,uuuu,vvvv,xxxx,yyyy,kkkkk,lllll	N	Wilkins 950XLD 3/4" (H)
DCDA	Wilkins	350ADAR	##	VU	########		Y	9	(qqq),ttt,www,yyy,xxxx,yyyy,kkkkk,lllll	N	Wilkins 950XLD 3/4" (H)
DCDA	Wilkins	350ASTDA	####	H	########	########	N	10	(qqq),ttt,www,yyy,uuuu,vvvv,xxxx,yyyy,kkkkk,lllll	N	Wilkins 950XLD 3/4" (H)
DCDA	Wilkins	350ASTDA	####	H	########		Y	10	(qqq),ttt,www,yyy,uuuu,vvvv,xxxx,yyyy,kkkkk,lllll	N	Wilkins 950XLD 3/4" (H)
DCDA	Wilkins	350ASTDA	####	VU	########	########	N	10	(qqq),ttt,www,yyy,uuuu,vvvv,xxxx,yyyy,kkkkk,lllll	N	Wilkins 950XLD 3/4" (VU)
DCDA	Wilkins	350ASTDA	####	VU	########		Y	10	(qqq),ttt,www,yyy,uuuu,vvvv,xxxx,yyyy,kkkkk,lllll	N	Wilkins 950XLD 3/4" (VU)
DCDA	Wilkins	350ASTDA	#	H	########	########	N	10	(qqq),ttt,www,yyy,uuuu,vvvv,xxxx,yyyy,kkkkk,lllll	N	Wilkins 950XLD 3/4" (H)
DCDA	Wilkins	350ASTDA	#	H	########		Y	10	(qqq),ttt,www,yyy,uuuu,vvvv,xxxx,yyyy,kkkkk,lllll	N	Wilkins 950XLD 3/4" (H)
DCDA	Wilkins	350ASTDA	#	VU	########	########	N	10	(qqq),ttt,www,yyy,uuuu,vvvv,xxxx,yyyy,kkkkk,lllll	N	Wilkins 950XLD 3/4" (VU)

Type	Manufacturer	Model	Size	Orientation(s)	Approved	Renewed	≤0.25% Pb	Manual	Shutoffs	Spare Parts	Bypass
DCDA	Wilkins	350ASTDA	#	VU	########		Y	10	(qqq),ttt,www,yyy,uuuu,vvvv,xxxx,yyyy,kkkkk,llllll	N	Wilkins 950XLD 3/4" (VU)
DCDA	Wilkins	350ASTDA	#	H	########	########	N	10	(qqq),ttt,www,yyy,uuuu,vvvv,xxxx,yyyy,kkkkk,llllll	N	Wilkins 950XLD 3/4" (H)
DCDA	Wilkins	350ASTDA	#	H	########		Y	10	(qqq),ttt,www,yyy,uuuu,vvvv,xxxx,yyyy,kkkkk,llllll	N	Wilkins 950XLD 3/4" (H)
DCDA	Wilkins	350ASTDA	#	VU	########	########	N	10	(qqq),ttt,www,yyy,uuuu,vvvv,xxxx,yyyy,kkkkk,llllll	N	Wilkins 950XLD 3/4" (VU)
DCDA	Wilkins	350ASTDA	#	VU	########		Y	10	(qqq),ttt,www,yyy,uuuu,vvvv,xxxx,yyyy,kkkkk,llllll	N	Wilkins 950XLD 3/4" (VU)
DCDA	Wilkins	350ASTDA	#	H	########		N	10	(qqq),ttt,www,yyy,uuuu,vvvv,xxxx,yyyy,kkkkk,llllll	N	Wilkins 950XLD 3/4" (H)
DCDA	Wilkins	350ASTDA	#	H	########		Y	10	(qqq),ttt,www,yyy,uuuu,vvvv,xxxx,yyyy,kkkkk,llllll	N	Wilkins 950XLD 3/4" (H)
DCDA	Wilkins	350ASTDA	#	VU	########		N	10	(qqq),ttt,www,yyy,uuuu,vvvv,xxxx,yyyy,kkkkk,llllll	N	Wilkins 950XLD 3/4" (VU)
DCDA	Wilkins	350ASTDA	#	VU	########		Y	10	(qqq),ttt,www,yyy,uuuu,vvvv,xxxx,yyyy,kkkkk,llllll	N	Wilkins 950XLD 3/4" (VU)
DCDA	Wilkins	350ASTDA	#	H	########		Y	10	(qqq),ttt,www,yyy,uuuu,vvvv,xxxx,yyyy,kkkkk,llllll	N	Wilkins 950XLD 3/4" (H)
DCDA	Wilkins	350ASTDA	#	VU	########		N	10	(qqq),ttt,www,yyy,uuuu,vvvv,xxxx,yyyy,kkkkk,llllll	N	Wilkins 950XLD 3/4" (VU)
DCDA	Wilkins	350ASTDA	##	H	########		Y	10	(qqq),ttt,www,yyy,uuuu,vvvv,xxxx,yyyy,kkkkk,llllll	N	Wilkins 950XLD 3/4" (H)
DCDA	Wilkins	350ASTDA	##	VU	########		Y	10	(qqq),ttt,www,yyy,uuuu,vvvv,xxxx,yyyy,kkkkk,llllll	N	Wilkins 950XLD 3/4" (VU)
DCDA	Wilkins	350ASTDAR	####	H	########		Y	10	(yyyy),ttt,www,yyy,uuuu,vvvv,xxxx,kkkkk,llllll	N	Wilkins 950XLD 3/4" (H)
DCDA	Wilkins	350ASTDAR	####	VU	########		Y	10	(yyyy),ttt,www,yyy,uuuu,vvvv,xxxx,kkkkk,llllll	N	Wilkins 950XLD 3/4" (VU)
DCDA	Wilkins	350ASTDAR	#	H	########		Y	10	(yyyy),ttt,www,yyy,uuuu,vvvv,xxxx,kkkkk,llllll	N	Wilkins 950XLD 3/4" (H)
DCDA	Wilkins	350ASTDAR	#	VU	########		Y	10	(yyyy),ttt,www,yyy,uuuu,vvvv,xxxx,kkkkk,llllll	N	Wilkins 950XLD 3/4" (VU)
DCDA	Wilkins	350ASTDAR	#	H	########		Y	10	(yyyy),ttt,www,yyy,uuuu,vvvv,xxxx,kkkkk,llllll	N	Wilkins 950XLD 3/4" (H)
DCDA	Wilkins	350ASTDAR	#	VU	########		Y	10	(yyyy),ttt,www,yyy,uuuu,vvvv,xxxx,kkkkk,llllll	N	Wilkins 950XLD 3/4" (VU)
DCDA	Wilkins	350ASTDAR	#	H	########		Y	10	(yyyy),ttt,www,yyy,uuuu,vvvv,xxxx,kkkkk,llllll	N	Wilkins 950XLD 3/4" (H)
DCDA	Wilkins	350ASTDAR	#	VU	########		Y	10	(yyyy),ttt,www,yyy,uuuu,vvvv,xxxx,kkkkk,llllll	N	Wilkins 950XLD 3/4" (VU)
DCDA	Wilkins	350ASTDAR	##	H	########		Y	10	(yyyy),ttt,www,yyy,uuuu,vvvv,xxxx,kkkkk,llllll	N	Wilkins 950XLD 3/4" (H)
DCDA	Wilkins	350ASTDAR	##	VU	########		Y	10	(yyyy),ttt,www,yyy,uuuu,vvvv,xxxx,kkkkk,llllll	N	Wilkins 950XLD 3/4" (VU)
DCDA	Wilkins	350DA	####	H	########	########	N	9	(hh),ff,mm,uu,zz,vvvv,wwww,yyyy,zzzz,kkkkk	N	Wilkins 950XLD 3/4" (H)
DCDA	Wilkins	350DA	####	H	########		Y	9	(hh),qqq,vvv,www,yyyy,zzzz,kkkkk	N	Wilkins 950XLD 3/4" (H)
DCDA	Wilkins	350DA	####	VU	########	########	N	9	(hh),ff,mm,uu,zz,vvvv,wwww,yyyy,zzzz	N	Wilkins 950XLD 3/4" (VU)
DCDA	Wilkins	350DA	####	VU	########		Y	9	(hh),qqq,vvv,www,yyyy,zzzz,kkkkk	N	Wilkins 950XLD 3/4" (VU)
DCDA	Wilkins	350DA	#	H	########	########	Y	9	(hh),ff,mm,uu,zz,vvvv,wwww,yyyy,zzzz,kkkkk	N	Wilkins 950XLD 3/4" (H)
DCDA	Wilkins	350DA	#	H	########		Y	9	(hh),ff,mm,uu,zz,vvvv,wwww,yyyy,zzzz,kkkkk	N	Wilkins 950XLD 3/4" (H)
DCDA	Wilkins	350DA	#	H	########		Y	9	(hh),qqq,vvv,www,yyyy,zzzz	N	Wilkins 950XLD 3/4" (H)
DCDA	Wilkins	350DA	#	VU	########	########	N	9	(hh),ff,mm,uu,zz,vvvv,wwww,yyyy,zzzz,kkkkk	N	Wilkins 950XLD 3/4" (VU)
DCDA	Wilkins	350DA	#	VU	########	########	Y	9	(hh),ff,mm,uu,zz,vvvv,wwww,yyyy,zzzz,kkkkk	N	Wilkins 950XLD 3/4" (VU)
DCDA	Wilkins	350DA	#	VU	########		Y	9	(hh),qqq,vvv,www,yyyy,zzzz	N	Wilkins 950XLD 3/4" (VU)
DCDA	Wilkins	350DA	#	H	########	########	N	9	(hh),ff,mm,uu,zz,qqq,vvv,www,zzz,eeee,vvvv,wwww,yyyy,zzzz,kkkkk	N	Wilkins 950XLD 3/4" (H)
DCDA	Wilkins	350DA	#	H	########	########	Y	9	(hh),ff,mm,uu,zz,qqq,vvv,www,zzz,eeee,vvvv,wwww,yyyy,zzzz,kkkkk	N	Wilkins 950XLD 3/4" (H)
DCDA	Wilkins	350DA	#	H	########		Y	9	(hh),qqq,vvv,www,yyyy,zzzz	N	Wilkins 950XLD 3/4" (H)
DCDA	Wilkins	350DA	#	VU	########	########	N	9	(hh),ff,mm,uu,zz,qqq,vvv,www,zzz,eeee,vvvv,wwww,yyyy,zzzz,kkkkk	N	Wilkins 950XLD 3/4" (VU)
DCDA	Wilkins	350DA	#	VU	########	########	Y	9	(hh),ff,mm,uu,zz,qqq,vvv,www,zzz,eeee,vvvv,wwww,yyyy,zzzz,kkkkk	N	Wilkins 950XLD 3/4" (VU)
DCDA	Wilkins	350DA	#	VU	########		Y	9	(hh),qqq,vvv,www,yyyy,zzzz	N	Wilkins 950XLD 3/4" (VU)
DCDA	Wilkins	350DA	#	H	########	########	N	9	(hh),ff,mm,uu,zz,qqq,vvv,www,zzz,eeee,vvvv,wwww,yyyy,zzzz,kkkkk	N	Wilkins 950XLD 3/4" (H)
DCDA	Wilkins	350DA	#	H	########	########	Y	9	(hh),ff,mm,uu,zz,qqq,vvv,www,zzz,eeee,vvvv,wwww,yyyy,zzzz,kkkkk	N	Wilkins 950XLD 3/4" (H)
DCDA	Wilkins	350DA	#	H	########		Y	9	(hh),qqq,vvv,www,yyyy,zzzz	N	Wilkins 950XLD 3/4" (H)
DCDA	Wilkins	350DA	#	VU	########	########	N	9	(hh),ff,mm,uu,zz,qqq,vvv,www,zzz,eeee,vvvv,wwww,yyyy,zzzz,kkkkk	N	Wilkins 950XLD 3/4" (VU)
DCDA	Wilkins	350DA	#	VU	########	########	Y	9	(hh),ff,mm,uu,zz,qqq,vvv,www,zzz,eeee,vvvv,wwww,yyyy,zzzz,kkkkk	N	Wilkins 950XLD 3/4" (VU)
DCDA	Wilkins	350DA	#	VU	########		Y	9	(hh),qqq,vvv,www,yyyy,zzzz	N	Wilkins 950XLD 3/4" (VU)
DCDA	Wilkins	350DA	#	H	########	########	N	9	(hh),ff,mm,uu,zz,qqq,vvv,www,zzz,eeee,vvvv,wwww,yyyy,zzzz,kkkkk	N	Wilkins 950XLD 3/4" (H)
DCDA	Wilkins	350DA	#	H	########	########	Y	9	(hh),ff,mm,uu,zz,qqq,vvv,www,zzz,eeee,vvvv,wwww,yyyy,zzzz,kkkkk	N	Wilkins 950XLD 3/4" (H)
DCDA	Wilkins	350DA	#	H	########		Y	9	(hh),qqq,vvv,www,yyyy,zzzz	N	Wilkins 950XLD 3/4" (H)
DCDA	Wilkins	350DA	#	VU	########	########	N	9	(hh),ff,mm,uu,zz,qqq,vvv,www,zzz,eeee,vvvv,wwww,yyyy,zzzz,kkkkk	N	Wilkins 950XLD 3/4" (VU)
DCDA	Wilkins	350DA	#	VU	########	########	Y	9	(hh),ff,mm,uu,zz,qqq,vvv,www,zzz,eeee,vvvv,wwww,yyyy,zzzz,kkkkk	N	Wilkins 950XLD 3/4" (VU)
DCDA	Wilkins	350DA	#	VU	########		Y	9	(hh),qqq,vvv,www,yyyy,zzzz	N	Wilkins 950XLD 3/4" (VU)
DCDA	Wilkins	350DA	##	H	########	########	N	9	(hh),ff,mm,uu,zz,qqq,vvv,www,zzz,eeee,vvvv,wwww,yyyy,zzzz,kkkkk	N	Wilkins 950XLD 3/4" (H)
DCDA	Wilkins	350DA	##	H	########	########	Y	9	(hh),ff,mm,uu,zz,qqq,vvv,www,zzz,eeee,vvvv,wwww,yyyy,zzzz,kkkkk	N	Wilkins 950XLD 3/4" (H)
DCDA	Wilkins	350DA	##	H	########		Y	9	(hh),qqq,vvv,www,yyyy,zzzz	N	Wilkins 950XLD 3/4" (H)
DCDA	Wilkins	350DA	##	VU	########	########	N	9	(hh),ff,mm,uu,zz,qqq,vvv,www,zzz,eeee,vvvv,wwww,yyyy,zzzz,kkkkk	N	Wilkins 950XLD 3/4" (VU)
DCDA	Wilkins	350DA	##	VU	########	########	Y	9	(hh),ff,mm,uu,zz,qqq,vvv,www,zzz,eeee,vvvv,wwww,yyyy,zzzz,kkkkk	N	Wilkins 950XLD 3/4" (VU)
DCDA	Wilkins	350DA	##	VU	########		Y	9	(hh),qqq,vvv,www,yyyy,zzzz	N	Wilkins 950XLD 3/4" (VU)
DCDA	Wilkins	350DA	##	H	########	########	N	9	(hh),vvvv,wwww,yyyy,zzzz,kkkkk	N	Wilkins 950XLD 3/4" (H)
DCDA	Wilkins	350DA	##	H	########	########	Y	9	(hh),ssss,tttt,uuuu,vvvv,wwww,xxxx,yyyy,zzzz,aaaaa	N	Wilkins 950XLD 3/4" (H)
DCDA	Wilkins	350DA	##	H	########		Y	9	(hh),vvvv,wwww,yyyy,zzzz,kkkkk	N	Wilkins 950XLD 3/4" (H)
DCDA	Wilkins	450DA	#	VUVU	########	########	N	9	(qqq),ttt,www,yyy,zzz,eeee,uuuu,vvvv,xxxx,yyyy,kkkkk,llllll	N	Wilkins 950XLD 3/4" (H)
DCDA	Wilkins	450DA	#	VUVU	########		Y	9	(hh),qqq,vvv,www,yyyy,zzzz	N	Wilkins 950XLD 3/4" (H)
DCDA	Wilkins	450DA	#	VUVU	########	########	N	9	(qqq),ttt,www,yyy,zzz,eeee,uuuu,vvvv,xxxx,yyyy,kkkkk,llllll	N	Wilkins 950XLD 3/4" (H)
DCDA	Wilkins	450DA	#	VUVU	########		Y	9	(hh),qqq,vvv,www,yyyy,zzzz	N	Wilkins 950XLD 3/4" (H)
DCDA	Wilkins	450DA	#	VUVU	########	########	N	9	(qqq),ttt,www,yyy,zzz,eeee,uuuu,vvvv,xxxx,yyyy,kkkkk,llllll	N	Wilkins 950XLD 3/4" (H)
DCDA	Wilkins	450DA	#	VUVU	########		Y	9	(hh),qqq,vvv,www,yyyy,zzzz	N	Wilkins 950XLD 3/4" (H)
DCDA	Wilkins	450DA	##	VUVU	########	########	N	9	(qqq),ttt,www,yyy,zzz,eeee,uuuu,vvvv,xxxx,yyyy,kkkkk,llllll	N	Wilkins 950XLD 3/4" (H)
DCDA	Wilkins	450DA	##	VUVU	########		Y	9	(hh),qqq,vvv,www,yyyy,zzzz	N	Wilkins 950XLD 3/4" (H)
DCDA	Wilkins	950DA	####	H	########	########	N	8	(hh),ff,mm,uu,zz,vvvv,wwww,yyyy,zzzz	N	Wilkins 950XL 3/4" (H), Wilkins 950 3/4" (H)
DCDA	Wilkins	950DA	####	VU	########	########	N	8	(hh),ff,mm,uu,zz,vvvv,wwww,yyyy,zzzz	N	Wilkins 950XL 3/4" (VU)
DCDA	Wilkins	950DA	#	H	########	########	N	8	(hh),ff,mm,uu,zz,vvvv,wwww,yyyy,zzzz	N	Wilkins 950XL 3/4" (H), Wilkins 950 3/4" (H)
DCDA	Wilkins	950DA	#	VU	########	########	N	8	(hh),ff,mm,uu,zz,vvvv,wwww,yyyy,zzzz	N	Wilkins 950XL 3/4" (VU)
DCDA	Wilkins	950DA	#	H	########	########	N	8	hh,ff,mm,uu,zz,vvvv,wwww,yyyy,zzzz	Y	Wilkins 950XL 3/4" (H), Wilkins 950 3/4" (H)
DCDA	Wilkins	950DA	#	VU	########	########	N	8	hh,ff,mm,uu,zz,vvvv,wwww,yyyy,zzzz	Y	Wilkins 950XL 3/4" (VU)
DCDA	Wilkins	950DA	#	H	########	########	N	8	hh,ff,mm,uu,zz,vvvv,wwww,yyyy,zzzz	Y	Wilkins 950XL 3/4" (H), Wilkins 950 3/4" (H)
DCDA	Wilkins	950DA	#	VU	########	########	N	8	hh,ff,mm,uu,zz,vvvv,wwww,yyyy,zzzz	Y	Wilkins 950XL 3/4" (VU)
DCDA	Wilkins	950DA	#	H	########	########	N	8	(hh),ff,mm,uu,zz,vvvv,wwww,yyyy,zzzz	N	Wilkins 950XL 3/4" (H), Wilkins 950 3/4" (H)
DCDA	Wilkins	950DA	#	VU	########	########	N	8	(hh),ff,mm,uu,zz,vvvv,wwww,yyyy,zzzz	N	Wilkins 950XL 3/4" (VU)
DCDA	Wilkins	950DA	##	H	########	########	N	8	(hh),ff,mm,uu,zz,vvvv,wwww,yyyy,zzzz	N	Wilkins 950XL 3/4" (H), Wilkins 950 3/4" (H)
DCDA	Wilkins	950XLTDA	#	H	########	########	N	9	(bbb)	N	Wilkins 350D 3/4" (H)
DCDA	Wilkins	950XLTDA	#	VU	########	########	N	9	(bbb)	N	Wilkins 350D 3/4" (VU)
DCDA	Wilkins	950XLTDABF	#	H	########	########	N	9	(bbbbb), ccccc	N	Wilkins 350D 3/4" (H)
DCDA	Wilkins	950XLTDABF	#	VU	########	########	N	9	(bbbbb), ccccc	N	Wilkins 350D 3/4" (VU)
DCDA	Wilkins	DCDA	####	H	########	########	N	7	hh,ff,mm,uu,zz	Y	Wilkins 550A 3/4" (H)
DCDA	Wilkins	DCDA	#	H	########	########	N	7	hh,ff,mm,uu,zz	Y	Wilkins 550A 3/4" (H)
DCDA	Wilkins	DCDA	#	H	########	########	N	7	hh,ff,mm,uu,zz	Y	Wilkins 550A 3/4" (H)
DCDA	Wilkins	DCDA	#	H	########	########	N	7	hh,ff,mm,uu,zz	Y	Wilkins 550A 3/4" (H)
DCDA	Backflow Dire	Deringer 30	####	H	########		Y	10	(int)	N	Backflow Direct 1/2" CV(HVD)
DCDA	Backflow Dire	Deringer 30	####	VU	########		Y	10	(int)	N	Backflow Direct 1/2" CV(VUH)
DCDA	Backflow Dire	Deringer 30	#	H	########		Y	10	(int)	N	Backflow Direct 1/2" CV(HVD)
DCDA	Backflow Dire	Deringer 30	#	VU	########		Y	10	(int)	N	Backflow Direct 1/2" CV(VUH)
DCDA	Backflow Dire	Deringer 30	#	H	########		Y	10	(int)	N	Backflow Direct 1/2" CV(HVD)
DCDA	Backflow Dire	Deringer 30	#	VU	########		Y	10	(int)	N	Backflow Direct 1/2" CV(VUH)
DCDA	Febco	LF856	####	H	########		Y	10	(mm), ll	N	Watts 3/4" LF619 (H)
DCDA	Febco	LF856	####	VU	########		Y	10	(mm), ll	N	Watts 3/4" LF619 (HVU)
DCDA	Febco	LF856	#	H	########		Y	10	(mm), ll	N	Watts 3/4" LF619 (H)
DCDA	Febco	LF856	#	VU	########		Y	10	(mm), ll	N	Watts 3/4" LF619 (HVU)
DCDA	Febco	LF856	#	H	########		Y	10	(mm), ll	N	Watts 3/4" LF619 (H)
DCDA	Febco	LF856	#	VU	########		Y	10	(mm), ll	N	Watts 3/4" LF619 (HVU)
DCDA	Febco	LF856	#	H	########		Y	10	(mm), ll	N	Watts 3/4" LF619 (H)
DCDA	Febco	LF856	#	VU	########		Y	10	(mm), ll	N	Watts 3/4" LF619 (HVU)
DCDA	Febco	LF856	#	H	########		Y	10	(mm), ll	N	Watts 3/4" LF619 (H)
DCDA	Febco	LF856	#	VU	########		Y	10	(mm), ll	N	Watts 3/4" LF619 (HVU)
DCDA	Febco	LF856	##	H	########		Y	10	(mm), ll	N	Watts 3/4" LF619 (H)
DCDA	Febco	LF856	##	VU	########		Y	10	(mm), ll	N	Watts 3/4" LF619 (HVU)
DCDA	Febco	LF866	####	VUVU	########		Y	10	(mm), ll	N	Watts 3/4" LF619 (HVU)
DCDA	Febco	LF876V	####	VUVU	########		Y	10	(mm), ll	N	Watts 3/4" LF619 (HVD)
DCDA	Febco	LF876V	#	VUVU	########		Y	10	(mm), ll	N	Watts 3/4" LF619 (HVU)
DCDA	Febco	LF876V	#	VUVU	########		Y	10	(mm), ll	N	Watts 3/4" LF619 (HVD)
DCDA	Febco	LF876V	#	VUVU	########		Y	10	(mm), ll	N	Watts 3/4" LF619 (HVU)
DCDA	Febco	LF876V	#	VUVU	########		Y	10	(mm), ll	N	Watts 3/4" LF619 (HVD)
DCDA	Febco	LF876V	#	VUVU	########		Y	10	(mm), ll	N	Watts 3/4" LF619 (HVU)
DCDA	Febco	LF876V	#	VUVU	########		Y	10	(mm), ll	N	Watts 3/4" LF619 (HVD)
DCDA	Febco	LF876V	#	VUVU	########		Y	10	(mm), ll	N	Watts 3/4" LF619 (HVU)
DCDA	Febco	LF876V	#	VUVU	########		Y	10	(mm), ll	N	Watts 3/4" LF619 (HVD)
PVB	Ames	A200	3/4	VUH	########	########	N	8	(vv),xx,ooo,hhhh,pppp	N	
PVB	Ames	A200	#	VUH	########	########	N	8	(vv),xx,ooo,hhhh,pppp	N	
PVB	Ames	A200	####	VUH	########	########	N	8	(vv),xx,ooo,hhhh,pppp	N	
PVB	Ames	A200	#	VUH	########	########	N	8	(vv),xx,ooo,hhhh,pppp	N	
PVB	Apollo/Conbra	4050302	1/2	VUH	########	########	N	8	dd	Y	
PVB	Apollo/Conbra	4050402	3/4	VUH	########	########	N	8	(dd)	Y	
PVB	Apollo/Conbra	4050502	#	VUH	########	########	N	8	(dd)	Y	
PVB	Apollo/Conbra	4050602	####	VUH	########	########	N	8	(dd)	Y	

Type	Manufacturer	Model	Size	Orientation(s)	Approved	Renewed	≤0.25% Pb	Manual	Shutoffs	Spare Parts	Bypass
PVB	Apollo/Conbra	4050702	####	VUH	########	########	N	8	(dd)	Y	
PVB	Apollo/Conbra	4050802	#	VUH	########	########	N	8	(dd)	Y	
PVB	Apollo/Conbra	PVB	1/2								
PVB	Apollo/Conbra	PVB	3/4								
PVB	Apollo/Conbra	PVB	#								
PVB	Apollo/Conbra	PVB	####								
PVB	Apollo/Conbra	PVB	####								
PVB	Apollo/Conbra	PVB	#								
PVB	Apollo/Conbra	PVB4A	1/2	VUH	########	########	N	9	(iiiii),sssss	N	
PVB	Apollo/Conbra	PVB4A	3/4	VUH	########	########	N	9	(iiiii),sssss	N	
PVB	Apollo/Conbra	PVB4A	#	VUH	########	########	N	9	(iiiii),sssss	N	
PVB	Apollo/Conbra	PVB4A	####	VUH	########	########	N	9	(iiiii),sssss	N	
PVB	Apollo/Conbra	PVB4A	####	VUH	########	########	N	9	(iiiii),sssss	N	
PVB	Apollo/Conbra	PVB4A	#	VUH	########	########	N	9	(iiiii),sssss	N	
PVB	Apollo/Conbra	PVB4V	1/2	VUH	########	########	N	9	(dd)	Y	
PVB	Apollo/Conbra	PVB4V	3/4	VUH	########	########	N	9	(dd)	Y	
PVB	Apollo/Conbra	PVB4V	#	VUH	########	########	N	9	(dd)	Y	
PVB	Apollo/Conbra	PVB4V	####	VUH	########	########	N	9	(dd)	Y	
PVB	Apollo/Conbra	PVB4V	####	VUH	########	########	N	9	(dd)	Y	
PVB	Apollo/Conbra	PVB4V	#	VUH	########	########	N	9	(dd)	Y	
PVB	Conbraco						N				
PVB	Febco	765	1/2	VUH	########	########	N	5	(ii),fff,jjj,ooo	N	
PVB	Febco	765	3/4	VUH	########	########	N	5	(ii),fff,jjj,ooo,xxx	N	
PVB	Febco	765	#	VUH	########	########	N	5	(ii),fff,jjj,ooo,xxx	N	
PVB	Febco	765	####	VUH	########	########	N	5	(ii),fff,jjj,ooo	N	
PVB	Febco	765	####	VUH	########	########	N	5	(ii),fff,jjj,ooo,xxx	N	
PVB	Febco	765	#	VUH	########	########	N	5	(ii),fff,ooo,xxx	N	
PVB	Febco	767-FR	1/2	VUH	########	########	N	9	(vv), xx,pppp,rrrrr	N	
PVB	Febco	767-FR	3/4	VUH	########	########	N	9	(vv), xx,pppp,rrrrr	N	
PVB	Febco	767-FR	#	VUH	########	########	N	9	(vv), xx,pppp,rrrrr	N	
PVB	Febco	767-FR	####	VUH	########	########	N	9	(vv), xx,pppp,rrrrr	N	
PVB	Febco	767-FR	####	VUH	########	########	N	9	(vv), xx,pppp,rrrrr	N	
PVB	Febco	767-FR	#	VUH	########	########	N	9	(vv), xx,pppp,rrrrr	N	
PVB	Febco	LF767FR	1/2	VUH	########	########	Y	9	(hhhh),rrrrr	N	
PVB	Febco	LF767FR	3/4	VUH	########	########	Y	9	(hhhh),rrrrr	N	
PVB	Febco	LF767FR	#	VUH	########	########	Y	9	(hhhh),rrrrr	N	
PVB	Febco	LF767FR	####	VUH	########	########	Y	9	(hhhh),rrrrr	N	
PVB	Febco	LF767FR	####	VUH	########	########	Y	9	(hhhh),rrrrr	N	
PVB	Febco	LF767FR	#	VUH	########	########	Y	9	(hhhh),rrrrr	N	
PVB	Flomatic	PVB	3/4	VUH	########	########	N	9	(ii)	Y	
PVB	Flomatic	PVB	#	VUH	########	########	N	9	(ii)	Y	
PVB	Neptune						N				
PVB	Watts	800CMQT	1/2	VUH	########	########	N	8	vv,xx,ooo,hhhh,pppp	Y	
PVB	Watts	800CMQT	3/4	VUH	########	########	N	8	vv,xx,ooo,hhhh,pppp	Y	
PVB	Watts	800M2QT	1/2	VUH	########	########	N	8	vv,xx,ooo,hhhh,pppp	Y	
PVB	Watts	800M2QT	3/4	VUH	########	########	N	8	vv,xx,ooo,hhhh,pppp	Y	
PVB	Watts	800M2QT	#	VUH	########	########	N	8	vv,xx,ooo,hhhh,pppp	Y	
PVB	Watts	800M2QT	####	VUH	########	########	N	8	vv,xx,ooo,hhhh,pppp	Y	
PVB	Watts	800M2QT	####	VUH	########	########	N	8	vv,xx,ooo,hhhh,pppp	Y	
PVB	Watts	800M2QT	#	VUH	########	########	N	8	vv,xx,ooo,hhhh,pppp	Y	
PVB	Watts	800M3QT	1/2	VUH	########	########	N	8	vv,xx,ooo,hhhh,pppp	Y	
PVB	Watts	800M3QT	3/4	VUH	########	########	N	8	vv,xx,ooo,hhhh,pppp	Y	
PVB	Watts	800M4FR	1/2	VUH	########	########	N	9	(vv),xx,ooo,hhhh,pppp,rrrrr	N	
PVB	Watts	800M4FR	3/4	VUH	########	########	N	9	(vv),xx,ooo,hhhh,pppp,rrrrr	N	
PVB	Watts	800M4FR	#	VUH	########	########	N	9	(vv),xx,ooo,hhhh,pppp,rrrrr	N	
PVB	Watts	800M4FR	####	VUH	########	########	N	9	(vv),xx,ooo,hhhh,pppp,rrrrr	N	
PVB	Watts	800M4FR	####	VUH	########	########	N	9	(vv),xx,ooo,hhhh,pppp,rrrrr	N	
PVB	Watts	800M4FR	#	VUH	########	########	N	9	(vv),xx,ooo,hhhh,pppp,rrrrr	N	
PVB	Watts	800M4QT	1/2	VUH	########	########	N	8	(vv),xx,ooo,hhhh,pppp,rrrrr	N	
PVB	Watts	800M4QT	3/4	VUH	########	########	N	8	(vv),xx,ooo,hhhh,pppp,rrrrr	N	
PVB	Watts	800M4QT	#	VUH	########	########	N	8	(vv),xx,ooo,hhhh,pppp,rrrrr	N	
PVB	Watts	800M4QT	####	VUH	########	########	N	8	(vv),xx,ooo,hhhh,pppp,rrrrr	N	
PVB	Watts	800M4QT	####	VUH	########	########	N	8	(vv),xx,ooo,hhhh,pppp,rrrrr	N	
PVB	Watts	800M4QT	#	VUH	########	########	N	8	(vv),xx,ooo,hhhh,pppp,rrrrr	N	
PVB	Watts	800MQT	1/2	VUH	########	########	N	8	vv,xx,ooo,hhhh,pppp	Y	
PVB	Watts	800MQT	3/4	VUH	########	########	N	8	vv,xx,ooo,hhhh,pppp	Y	
PVB	Watts	800QT	3/4	VUH	########	########	N	5	vv,xx,ooo,hhhh,pppp	Y	
PVB	Watts	800QT	#	VUH	########	########	N	5	vv,xx,ooo,hhhh,pppp	Y	
PVB	Watts	800QT	####	VUH	########	########	N	5	vv,xx,ooo,hhhh,pppp	Y	
PVB	Watts	800QT	####	VUH	########	########	N	5	vv,xx,ooo,hhhh,pppp	Y	
PVB	Watts	800QT	#	VUH	########	########	N	5	vv,xx,ooo,hhhh,pppp	Y	
PVB	Watts	LF800M4FR	1/2	VUH	########	########	Y	9	(hhhh),rrrrr	N	
PVB	Watts	LF800M4FR	3/4	VUH	########	########	Y	9	(hhhh),rrrrr	N	
PVB	Watts	LF800M4FR	#	VUH	########		Y	9	(hhhh),rrrrr	N	
PVB	Watts	LF800M4FR	####	VUH	########	########	Y	9	(hhhh),rrrrr	N	
PVB	Watts	LF800M4FR	####	VUH	########	########	Y	9	(hhhh),rrrrr	N	
PVB	Watts	LF800M4FR	#	VUH	########	########	Y	9	(hhhh),rrrrr	N	
PVB	Watts	LF800M4QT	1/2	VUH	########	########	Y	9	(hhhh),rrrrr	N	
PVB	Watts	LF800M4QT	3/4	VUH	########	########	Y	9	(hhhh),rrrrr	N	
PVB	Watts	LF800M4QT	#	VUH	########		Y	9	(hhhh),rrrrr	N	
PVB	Watts	LF800M4QT	####	VUH	########	########	Y	9	(hhhh),rrrrr	N	
PVB	Watts	LF800M4QT	####	VUH	########	########	Y	9	(hhhh),rrrrr	N	
PVB	Watts	LF800M4QT	#	VUH	########	########	Y	9	(hhhh),rrrrr	N	
PVB	Wilkins	420	1/2	VUH	########	########	N	9	(ii),ooo	N	
PVB	Wilkins	420	3/4	VUH	########	########	N	9	(ii),ooo	N	
PVB	Wilkins	420	#	VUH	########	########	N	9	(ii),ooo	N	
PVB	Wilkins	420XL	1/2	VUH	########	########	Y	9	(iiiii)	N	
PVB	Wilkins	420XL	3/4	VUH	########	########	Y	9	(iiiii)	N	
PVB	Wilkins	420XL	#	VUH	########	########	Y	9	(iiiii)	Y	
PVB	Wilkins	720A	1/2	VUH	########	########	N	5	(ii),ooo	N	
PVB	Wilkins	720A	3/4	VUH	########	########	N	5	(ii),ooo	N	
PVB	Wilkins	720A	#	VUH	########	########	N	5	(ii),ooo	N	
PVB	Wilkins	720A	####	VUH	########	########	N	5	(ii),ooo	N	
PVB	Wilkins	720A	####	VUH	########	########	N	5	(ii),ooo	N	
PVB	Wilkins	720A	#	VUH	########	########	N	5	(ii),ooo	N	
RP	Ames	4000B	1/2	H	########	########	N	9	(vv),xx,ooo,hhhh,pppp,rrrrr	N	
RP	Ames	4000B	3/4	H	########	########	N	8	(vv),xx,ooo,hhhh,pppp,rrrrr	N	
RP	Ames	4000B	#	H	########	########	N	7	(vv),xx,ooo,hhhh,pppp,rrrrr	N	
RP	Ames	4000B	####	H	########	########	N	8	(vv),xx,ooo,hhhh,pppp,rrrrr	N	
RP	Ames	4000B	####	H	########	########	N	8	(vv),xx,ooo,hhhh,pppp,rrrrr	N	
RP	Ames	4000B	#	H	########	########	N	9	(vv),xx,ooo,hhhh,pppp,rrrrr	N	
RP	Ames	4000B-FP	3/4	H	########	########	N	9	(eeeee)	N	
RP	Ames	4000B-FP	#	H	########	########	N	9	(eeeee)	N	
RP	Ames	4000B-FP	####	H	########	########	N	9	(eeeee)	N	
RP	Ames	4000B-FP	####	H	########	########	N	9	(eeeee)	N	
RP	Ames	4000B-FP	#	H	########	########	N	9	(eeeee)	N	
RP	Ames	4000BM2	#	H	########	########	N	9	(vv),xx,ooo,hhhh,pppp,rrrrr	N	
RP	Ames	4000BM2-FP	#	H	########	########	N	9	(eeeee)	N	
RP	Ames	4000BM3	3/4	H	########	########	N	9	(vv),xx,ooo,hhhh,pppp,rrrrr	N	
RP	Ames	4000BM3-FP	3/4	H	########	########	N	9	(eeeee)	N	
RP	Ames	4000CIV	####	H	########	########	N	7	(oo),gg,hh,ll,mm,pp,tt,uu	N	
RP	Ames	4000CIV	#	H	########	########	N	7	(oo),gg,hh,ll,mm,pp,tt,uu	N	
RP	Ames	4000CIV	#	H	########	########	N	6	(oo),gg,hh,ll,mm,pp,tt,uu,eee	N	
RP	Ames	4000CIV	#	H	########	########	N	6	(oo),gg,hh,ll,mm,pp,tt,uu,eee	N	
RP	Ames	4000CIV	#	H	########	########	N	8	(oo),gg,hh,ll,mm,pp,tt,uu	N	
RP	Ames	4000CIV	##	H	########	########	N	8	(oo),gg,hh,ll,mm,pp,tt,uu	N	
RP	Ames	4000RP	#	H	########	########	N	7	(tt),ee,ff,gg,hh,ll,mm,oo,pp,uu,ccc,ddd,ffff,gggg	N	
RP	Ames	4000RP	#	H	########	########	N	7	(tt),ee,ff,gg,hh,ll,mm,oo,pp,uu,ccc,ddd,ffff,gggg	N	
RP	Ames	4000RP	#	H	########	########	N	7	(tt),ee,ff,gg,hh,ll,mm,oo,pp,uu,ccc,ddd,ffff,gggg	N	
RP	Ames	4000RP	##	H	########	########	N	7	(tt),ee,ff,gg,hh,ll,mm,oo,pp,uu,ccc,ddd,ffff,gggg	N	
RP	Ames	4000SS	####	H	########	########	N	8	(tt),ee,ff,gg,hh,pp,uu,ccc,ddd	N	
RP	Ames	4000SS	####	H	########	########	Y	8	ll,mm,oo,ffff,gggg	N	
RP	Ames	4000SS	#	H	########	########	N	8	(tt),ee,ff,gg,hh,pp,uu,ccc,ddd	N	
RP	Ames	4000SS	#	H	########	########	Y	8	ll,mm,oo,ffff,gggg	N	
RP	Ames	4000SS	#	H	########	########	N	8	(tt),ee,ff,gg,hh,pp,uu,ccc,ddd	N	

Type	Manufacturer	Model	Size	Orientation(s)	Approved	Renewed	≤0.25% Pb	Manual	Shutoffs	Spare Parts	Bypass
RP	Ames	4000SS	#	H	########	########	Y	8	li,mm,oo,ffff,gggg	N	
RP	Ames	4000SS	#	H	########	########	N	8	(tt),ee,ff,gg,hh,pp,uu,ccc,ddd	N	
RP	Ames	4000SS	#	H	########	########	Y	8	li,mm,oo,ffff,gggg	N	
RP	Ames	400B	3/4	H	########	########	N	9	(vv),xx,ooo,hhhh,pppp,rrrrr	N	
RP	Ames	400B	3/4	VD	########	########	N	9	(vv),xx,ooo,hhhh,pppp,rrrrr	N	
RP	Ames	400B	#	H	########	########	N	9	(vv),xx,ooo,hhhh,pppp,rrrrr	N	
RP	Ames	400B	#	VD	########	########	N	9	(vv),xx,ooo,hhhh,pppp,rrrrr	N	
RP	Ames	400B	####	H	########	########	N	9	(vv),xx,ooo,hhhh,pppp,rrrrr	N	
RP	Ames	400B	####	VD	########	########	N	9	(vv),xx,ooo,hhhh,pppp,rrrrr	N	
RP	Ames	400B	####	H	########	########	N	9	(vv),xx,ooo,hhhh,pppp,rrrrr	N	
RP	Ames	400B	####	VD	########	########	N	9	(vv),xx,ooo,hhhh,pppp,rrrrr	N	
RP	Ames	400B	#	H	########	########	N	9	(vv),xx,ooo,hhhh,pppp,rrrrr	N	
RP	Ames	400B	#	VD	########	########	N	9	(vv),xx,ooo,hhhh,pppp,rrrrr	N	
RP	Ames	400B-A	3/4	VUVU	########	########	N	9	(vv),xx,ooo,hhhh,pppp,rrrrr	N	
RP	Ames	400B-A	#	VUVU	########	########	N	9	(vv),xx,ooo,hhhh,pppp,rrrrr	N	
RP	Ames	400B-A	####	VUVU	########	########	N	9	(vv),xx,ooo,hhhh,pppp,rrrrr	N	
RP	Ames	400B-A	####	VUVU	########	########	N	9	(vv),xx,ooo,hhhh,pppp,rrrrr	N	
RP	Ames	400B-A	#	VUVU	########	########	N	9	(vv),xx,ooo,hhhh,pppp,rrrrr	N	
RP	Ames	400B-Z	3/4	VUVU	########	########	N	9	(vv),xx,ooo,hhhh,pppp,rrrrr	N	
RP	Ames	400B-Z	#	VUVU	########	########	N	9	(vv),xx,ooo,hhhh,pppp,rrrrr	N	
RP	Ames	400B-Z	####	VUVU	########	########	N	9	(vv),xx,ooo,hhhh,pppp,rrrrr	N	
RP	Ames	400B-Z	####	VUVU	########	########	N	9	(vv),xx,ooo,hhhh,pppp,rrrrr	N	
RP	Ames	400B-Z	#	VUVU	########	########	N	9	(vv),xx,ooo,hhhh,pppp,rrrrr	N	
RP	Ames	Colt 400	####	H	########	########	N	9	(ppp),qqq,aaaa,bbbb,nnnnn	N	
RP	Ames	Colt 400	####	H	########	########	Y	9	zzz,dddd,eeee,gggg,kkkk,llll,mmmm,nnnn	N	
RP	Ames	Colt 400	#	H	########	########	N	9	(ppp),qqq,aaaa,bbbb,nnnnn	N	
RP	Ames	Colt 400	#	H	########	########	Y	9	zzz,dddd,eeee,gggg,kkkk,llll,mmmm,nnnn	N	
RP	Ames	Colt 400	#	H	########	########	N	9	(ppp),qqq,aaaa,bbbb,nnnnn	N	
RP	Ames	Colt 400	#	H	########	########	Y	9	zzz,dddd,eeee,gggg,kkkk,llll,mmmm,nnnn	N	
RP	Ames	Colt 400	#	H	########	########	N	9	(ppp),qqq,aaaa,bbbb,nnnnn	N	
RP	Ames	Colt 400	#	H	########	########	Y	9	zzz,dddd,eeee,gggg,kkkk,llll,mmmm,nnnn	N	
RP	Ames	Colt 400	#	H	########	########	N	9	(ppp),qqq,aaaa,bbbb,nnnnn	N	
RP	Ames	Colt 400	#	H	########	########	Y	9	zzz,dddd,eeee,gggg,kkkk,llll,mmmm,nnnn	N	
RP	Ames	Colt 400	##	H	########	########	N	9	(ppp),qqq,sss,ttt,aaaa,bbbb,nnnnn	N	
RP	Ames	Colt 400	##	H	########	########	Y	9	zzz,cccc,dddd,eeee,gggg,kkkk,llll,mmmm,nnnn	N	
RP	Ames	Colt 400BF	#	H	########	########	Y	9	(yyy)	N	
RP	Ames	Colt 400BF	#	H	########	########	Y	9	(yyy)	N	
RP	Ames	Colt 400N	####	VUVU	########	########	N	9	(ppp),qqq,aaaa,bbbb,nnnnn	N	
RP	Ames	Colt 400N	####	VUVU	########	########	Y	9	yyy,zzz,dddd,eeee,gggg,kkkk,llll,mmmm,nnnn	N	
RP	Ames	Colt 400N	#	VUVU	########	########	N	9	(ppp),qqq,aaaa,bbbb,nnnnn	N	
RP	Ames	Colt 400N	#	VUVU	########	########	Y	9	yyy,zzz,dddd,eeee,gggg,kkkk,llll,mmmm,nnnn	N	
RP	Ames	Colt 400N	#	VUVU	########	########	N	9	(ppp),qqq,aaaa,bbbb,nnnnn	N	
RP	Ames	Colt 400N	#	VUVU	########	########	Y	9	yyy,zzz,dddd,eeee,gggg,kkkk,llll,mmmm,nnnn	N	
RP	Ames	Colt 400N	#	VUVU	########	########	N	9	ppp,qqq,aaaa,bbbb,nnnnn		
RP	Ames	Colt 400N	#	VUVU	########	########	Y	9	zzz,dddd,eeee,gggg,kkkk,llll,mmmm,nnnn		
RP	Ames	Colt 400N	#	VUVU	########		Y	9	(yyy), zzz, dddd, eeee, gggg, kkkk, llll, mmmm, nnnn		
RP	Ames	Colt 400Z	####	VUVU	########	########	N	9	(ppp),qqq,aaaa,bbbb,nnnnn	N	
RP	Ames	Colt 400Z	####	VUVU	########	########	Y	9	yyy,zzz,dddd,eeee,gggg,kkkk,llll,mmmm,nnnn	N	
RP	Ames	Colt 400Z	#	VUVU	########	########	N	9	(ppp),qqq,aaaa,bbbb,nnnnn	N	
RP	Ames	Colt 400Z	#	VUVU	########	########	Y	9	yyy,zzz,dddd,eeee,gggg,kkkk,llll,mmmm,nnnn	N	
RP	Ames	Colt 400Z	#	VUVU	########	########	N	9	(ppp),qqq,aaaa,bbbb,nnnnn	N	
RP	Ames	Colt 400Z	#	VUVU	########	########	Y	9	yyy,zzz,dddd,eeee,gggg,kkkk,llll,mmmm,nnnn	N	
RP	Ames	Colt 400Z	#	VUVU	########		N	9	ppp, qqq, aaaa, bbbb,		
RP	Ames	Colt 400Z	#	VUVU	########		Y	9	(yyy), zzz, dddd, eeee, gggg, kkkk, llll, mmmm, nnnn		
RP	Ames	LF4000B	1/2	H	########		Y	9	(hhhh)	N	
RP	Ames	LF4000BM2	#	H	########		Y	9	(hhhh)	N	
RP	Ames	LF4000BM2	####	H	########		Y	8	(hhhh)	N	
RP	Ames	LF4000BM2	####	H	########		Y	8	(hhhh)	N	
RP	Ames	LF4000BM2	#	H	########		Y	9	(hhhh)	N	
RP	Ames	LF4000BM3	3/4	H	########		Y	9	(hhhh)	N	
RP	Ames	Maxim 400	####	H	########	########	N	9	(ppp),qqq,aaa,bbbb,nnnnn	N	
RP	Ames	Maxim 400	####	H	########	########	Y	9	zzz,dddd,eeee,gggg,kkkk,llll,mmmm,nnnn	N	
RP	Ames	Maxim 400	#	H	########	########	N	9	(ppp),qqq,aaa,bbbb,nnnnn	N	
RP	Ames	Maxim 400	#	H	########	########	Y	9	zzz,dddd,eeee,gggg,kkkk,llll,mmmm,nnnn	N	
RP	Ames	Maxim 400	#	H	########	########	N	9	(ppp),qqq,aaa,bbbb,nnnnn	N	
RP	Ames	Maxim 400	#	H	########	########	Y	9	kkkk,llll,mmmm,nnnn	N	
RP	Ames	Maxim 400	#	H	########	########	N	9	(ppp),qqq,sss,ttt,aaaa,bbbb,nnnnn	N	
RP	Ames	Maxim 400	#	H	########	########	Y	9	cccc,dddd,kkkk,llll,mmmm,nnnn	N	
RP	Ames	Maxim 400	#	H	########	########	N	9	(ppp),qqq,sss,ttt,aaaa,bbbb,nnnnn	N	
RP	Ames	Maxim 400	#	H	########	########	Y	9	zzz,cccc,dddd,eeee,gggg,kkkk,llll,mmmm,nnnn	N	
RP	Ames	Maxim 400	##	H	########	########	N	9	(ppp),qqq,sss,ttt,aaaa,bbbb	N	
RP	Ames	Maxim 400	##	H	########	########	Y	9	zzz,cccc,dddd,eeee,gggg,kkkk,llll,mmmm,nnnn	N	
RP	Ames	Maxim 400N	####	VUVU	########	########	N	9	(ppp),qqq,aaaa,bbbb,nnnnn	N	
RP	Ames	Maxim 400N	####	VUVU	########	########	Y	9	yyy,zzz,dddd,eeee,gggg,kkkk,llll,mmmm,nnnn	N	
RP	Ames	Maxim 400N	#	VUVU	########	########	N	9	(ppp),qqq,aaaa,bbbb,nnnnn	N	
RP	Ames	Maxim 400N	#	VUVU	########	########	Y	9	yyy,zzz,dddd,eeee,gggg,kkkk,llll,mmmm,nnnn	N	
RP	Ames	Maxim 400N	#	VUVU	########	########	N	9	ppp,qqq,aaaa,bbbb,nnnnn		
RP	Ames	Maxim 400N	#	VUVU	########	########	Y	9	yyy,zzz,dddd,eeee,gggg,kkkk,llll,mmmm,nnnn		
RP	Ames	Maxim 400N	#	VUVU	########		N	9	ppp, qqq, aaaa, bbbb,		
RP	Ames	Maxim 400N	#	VUVU	########		Y	9	(yyy), zzz, dddd, eeee, gggg, kkkk, llll, mmmm, nnnn		
RP	Ames	Maxim 400Z	####	VUVU	########	########	N	9	(ppp),qqq,aaaa,bbbb,nnnnn	N	
RP	Ames	Maxim 400Z	####	VUVU	########	########	Y	9	yyy,zzz,dddd,eeee,gggg,kkkk,llll,mmmm,nnnn	N	
RP	Ames	Maxim 400Z	#	VUVU	########	########	N	9	(ppp),qqq,aaaa,bbbb,nnnnn	N	
RP	Ames	Maxim 400Z	#	VUVU	########	########	Y	9	yyy,zzz,dddd,eeee,gggg,kkkk,llll,mmmm,nnnn	N	
RP	Ames	Maxim 400Z	#	VUVU	########		N	9	ppp, qqq, aaaa, bbbb,		
RP	Ames	Maxim 400Z	#	VUVU	########		Y	9	(yyy), zzz, dddd, eeee, gggg, kkkk, llll, mmmm, nnnn		
RP	Ames	RP	#								
RP	Ames	RP	#								
RP	Ames	RP	#								
RP	Ames	RP	##								
RP	Ames	U400B	#	H	########	########	N	9	(vv),xx,ooo,hhhh,pppp	N	
RP	Ames	U400B	#	VD	########	########	N	9	(vv),xx,ooo,hhhh,pppp	N	
RP	Ames	U400B	####	H	########	########	N	9	(vv),xx,ooo,hhhh,pppp	N	
RP	Ames	U400B	####	VD	########	########	N	9	(vv),xx,ooo,hhhh,pppp	N	
RP	Ames	U400B	####	H	########	########	N	9	(vv),xx,ooo,hhhh,pppp	N	
RP	Ames	U400B	####	VD	########	########	N	9	(vv),xx,ooo,hhhh,pppp	N	
RP	Ames	U400B	#	H	########	########	N	9	(vv),xx,ooo,hhhh,pppp	N	
RP	Ames	U400B	#	VD	########	########	N	9	(vv),xx,ooo,hhhh,pppp	N	
RP	Ames	U400B-A	3/4	VUVU	########	########	N	9	(vv),xx,ooo,hhhh,pppp	N	
RP	Ames	U400B-A	#	VUVU	########	########	N	9	(vv),xx,ooo,hhhh,pppp	N	
RP	Ames	U400B-A	####	VUVU	########	########	N	9	(vv),xx,ooo,hhhh,pppp	N	
RP	Ames	U400B-A	####	VUVU	########	########	N	9	(vv),xx,ooo,hhhh,pppp	N	
RP	Ames	U400B-A	#	VUVU	########	########	N	9	(vv),xx,ooo,hhhh,pppp	N	
RP	Apollo/Conbra	2020499T	3/4								
RP	Apollo/Conbra	4020002	#								
RP	Apollo/Conbra	4020003	#								
RP	Apollo/Conbra	4020005	#								
RP	Apollo/Conbra	4020102	1/4	H	########	########	N	8	dd	Y	
RP	Apollo/Conbra	4020199T	1/4								
RP	Apollo/Conbra	40201A2	1/4	H	########	########	N	8	dd	Y	
RP	Apollo/Conbra	40201A2S	1/4								
RP	Apollo/Conbra	40201T2	1/4								
RP	Apollo/Conbra	40201T2S	1/4								
RP	Apollo/Conbra	4020202	3/8	H	########	########	N	8	dd	Y	
RP	Apollo/Conbra	4020299T	3/8								
RP	Apollo/Conbra	40202A2	3/8	H	########	########	N	8	dd	Y	
RP	Apollo/Conbra	40202A2S	3/8								
RP	Apollo/Conbra	40202T2	3/8								
RP	Apollo/Conbra	40202T2S	3/8								
RP	Apollo/Conbra	4020302	1/2	H	########	########	N	8	dd	Y	
RP	Apollo/Conbra	4020399T	1/2								
RP	Apollo/Conbra	40203A2	1/2	H	########	########	N	8	dd	Y	
RP	Apollo/Conbra	40203A2S	1/2								
RP	Apollo/Conbra	40203T2	1/2								
RP	Apollo/Conbra	40203T2S	1/2								

Type	Manufacturer	Model	Size	Orientation(s)	Approved	Renewed	≤0.25% Pb	Manual	Shutoffs	Spare Parts	Bypass
RP	Apollo/Conbra	4020402	3/4	H	########	########	N	8	dd	Y	
RP	Apollo/Conbra	40204A2	3/4	H	########	########	N	8	dd	Y	
RP	Apollo/Conbra	40204A2S	3/4								
RP	Apollo/Conbra	40204A2U	3/4								
RP	Apollo/Conbra	40204A2Z	3/4								
RP	Apollo/Conbra	40204T2	3/4								
RP	Apollo/Conbra	40204TC2	3/4								
RP	Apollo/Conbra	40204TCU	3/4	VUVU	########	########	N	8	(dd)	Y	
RP	Apollo/Conbra	4020502	#	H	########	########	N	8	dd	Y	
RP	Apollo/Conbra	4020599T	#								
RP	Apollo/Conbra	40205A2	#	H	########	########	N	8	dd	Y	
RP	Apollo/Conbra	40205A2S	#								
RP	Apollo/Conbra	40205A2U	#								
RP	Apollo/Conbra	40205A2Z	#								
RP	Apollo/Conbra	40205T2	#								
RP	Apollo/Conbra	40205T2S	#	H	########	########	N	8	(uuu)	N	
RP	Apollo/Conbra	40205T2U	#	VUVU	########	########	N	8	(dd)	N	
RP	Apollo/Conbra	40205T2Z	#	VUVU	########	########	N	8	(dd)	N	
RP	Apollo/Conbra	40205TC2	#								
RP	Apollo/Conbra	40205TCU	#	VUVU	########	########	N	8	(dd)	Y	
RP	Apollo/Conbra	4020602	####	H	########	########	N	8	dd	Y	
RP	Apollo/Conbra	4020699T	####								
RP	Apollo/Conbra	40206A2	####	H	########	########	N	8	dd	Y	
RP	Apollo/Conbra	40206A2U	####								
RP	Apollo/Conbra	40206A2Z	####								
RP	Apollo/Conbra	40206T2	####								
RP	Apollo/Conbra	40206T2U	####								
RP	Apollo/Conbra	40206T2Z	####								
RP	Apollo/Conbra	4020702	####	H	########	########	N	8	dd	Y	
RP	Apollo/Conbra	4020799T	####								
RP	Apollo/Conbra	40207A2	####	H	########	########	N	8	dd	Y	
RP	Apollo/Conbra	40207A2U	####								
RP	Apollo/Conbra	40207A2Z	####								
RP	Apollo/Conbra	40207T2	####								
RP	Apollo/Conbra	40207T2U	####								
RP	Apollo/Conbra	40207T2Z	####								
RP	Apollo/Conbra	4020802	#	H	########	########	N	8	dd	Y	
RP	Apollo/Conbra	4020899T	#								
RP	Apollo/Conbra	40208A2	#	H	########	########	N	8	dd	Y	
RP	Apollo/Conbra	40208A2U	#								
RP	Apollo/Conbra	40208A4	#	H	########	########	N	8	rrr	Y	
RP	Apollo/Conbra	40208AZ2	#								
RP	Apollo/Conbra	40208T2	#								
RP	Apollo/Conbra	40208T2U	#								
RP	Apollo/Conbra	40208T2Z	#								
RP	Apollo/Conbra	4020902	####								
RP	Apollo/Conbra	4020903	####								
RP	Apollo/Conbra	4020905	####								
RP	Apollo/Conbra	4020A02	#								
RP	Apollo/Conbra	4020A03	#								
RP	Apollo/Conbra	4020A05	#								
RP	Apollo/Conbra	4020C02	#								
RP	Apollo/Conbra	4020C03	#								
RP	Apollo/Conbra	4020C05	#								
RP	Apollo/Conbra	4020E02	#								
RP	Apollo/Conbra	4020E03	#								
RP	Apollo/Conbra	4020G02	##								
RP	Apollo/Conbra	4020G03	##								
RP	Apollo/Conbra	4D-200	####	H	########	########	N	9	(yyy), cccc, dddd	Y	
RP	Apollo/Conbra	4D-200	#	H	########	########	N	9	(yyy), cccc, dddd	Y	
RP	Apollo/Conbra	4D-200	#	H	########	########	N	9	(yyy), cccc, dddd	Y	
RP	Apollo/Conbra	4D-200U	####	VUVU	########	########	N	9	(yyy), cccc, dddd	Y	
RP	Apollo/Conbra	4D-200U	#	VUVU	########	########	N	9	(yyy), cccc, dddd	Y	
RP	Apollo/Conbra	4D-200U	#	VUVU	########	########	N	9	(yyy), cccc, dddd	Y	
RP	Apollo/Conbra	RP40	1/4	H	########	########	N	8	(dd)	Y	
RP	Apollo/Conbra	RP40	3/8	H	########	########	N	8	(dd)	Y	
RP	Apollo/Conbra	RP40	1/2	H	########	########	N	8	(dd)	Y	
RP	Apollo/Conbra	RP40	3/4	H	########	########	N	8	(dd)	Y	
RP	Apollo/Conbra	RP40	#	H	########	########	N	8	(dd)	Y	
RP	Apollo/Conbra	RP40	####	H	########	########	N	8	(dd)	Y	
RP	Apollo/Conbra	RP40	####	H	########	########	N	8	(dd)	Y	
RP	Apollo/Conbra	RP40	#	H	########	########	N	8	(dd)	Y	
RP	Apollo/Conbra	RP40	####	H	########	########	N	8	(tt),bb,cc,ee,ll,mm,uu,mmm	Y	
RP	Apollo/Conbra	RP40	#	H	########	########	N	8	(tt),bb,cc,ee,ll,mm,uu,mmm	Y	
RP	Apollo/Conbra	RP40	#	H	########	########	N	8	(tt),bb,cc,ee,ll,mm,uu,mmm	Y	
RP	Apollo/Conbra	RP40	#	H	########	########	N	8	(tt),bb,ee,ll	Y	
RP	Apollo/Conbra	RP40	#	H	########	########	N	8	(tt),bb,cc,ee,ll,mm,uu	Y	
RP	Apollo/Conbra	RP40	##	H	########	########	N	8	(tt),bb,cc,ee,ll,mm,uu	Y	
RP	Apollo/Conbra	RP40N	3/4	VUVU	########	########	N	8	(dd)	Y	
RP	Apollo/Conbra	RP40N	####	VUVU	########	########	N	8	(dd)	Y	
RP	Apollo/Conbra	RP40U	####	VUVU	########	########	N	8	(dd)	Y	
RP	Apollo/Conbra	RP40U	#	VUVU	########	########	N	8	(dd)	Y	
RP	Apollo/Conbra	RP40Z	3/4	VUVU	########	########	N	8	(dd)	Y	
RP	Apollo/Conbra	RP40Z	####	VUVU	########	########	N	8	(dd)	Y	
RP	Apollo/Conbra	RP40Z	####	VUVU	########	########	N	8	(dd)	Y	
RP	Apollo/Conbra	RP40Z	#	VUVU	########	########	N	8	(dd)	Y	
RP	Apollo/Conbra	RP4A	1/2	H	########	########	N	9	(iiiiii),sssss	N	
RP	Apollo/Conbra	RP4A	3/4	H	########	########	N	9	(iiiiii),sssss,wwww	N	
RP	Apollo/Conbra	RP4A	#	H	########	########	N	9	(iiiiii),sssss,wwww	N	
RP	Apollo/Conbra	RP4A	####	H	########		N	9	(iiiiii),sssss,wwww	N	
RP	Apollo/Conbra	RP4A	####	H	########		N	9	(iiiiii),sssss,wwww	N	
RP	Apollo/Conbra	RP4A	#	H	########	########	N	9	(iiiiii),sssss,wwww	N	
RP	Apollo/Conbra	RPLF40	1/2	H	########	########	Y	9	(jjjjj)	Y	
RP	Apollo/Conbra	RPLF40	####	H	########	########	Y	9	(jjjjj)	Y	
RP	Apollo/Conbra	RPLF40	####	H	########	########	Y	9	(jjjjj)	Y	
RP	Apollo/Conbra	RPLF40	#	H	########	########	Y	9	(jjjjj)	Y	
RP	Apollo/Conbra	RPLF4A	1/2	H	########	########	Y	9	(jjjjj),ttttt,uuuuuu	N	
RP	Apollo/Conbra	RPLF4A	3/4	H	########	########	Y	9	(jjjjj),ttttt,vvvvv	N	
RP	Apollo/Conbra	RPLF4A	#	H	########	########	Y	9	(jjjjj),ttttt,vvvvv	N	
RP	Apollo/Conbra	RPLF4A	####	H	########		Y	9	(jjjjj),ttttt,vvvvv	N	
RP	Apollo/Conbra	RPLF4A	####	H	########		Y	9	(jjjjj),ttttt,vvvvv	N	
RP	Apollo/Conbra	RPLF4A	#	H	########	########	Y	9	(jjjjj),ttttt,vvvvv	N	
RP	Apollo/Conbra	RPLF4A	####	H	########		Y	10	(yyy), cccc, dddd, mmmm, nnnn, xxxxx, yyyyy, zzzzz, aaaaaa	N	
RP	Apollo/Conbra	RPLF4A	#	H	########		Y	10	(yyy), cccc, dddd, mmmm, nnnn, xxxxx, yyyyy, zzzzz, aaaaaa	N	
RP	Apollo/Conbra	RPLF4A	#	H	########		Y	10	(yyy), cccc, dddd, mmmm, nnnn, xxxxx, yyyyy, zzzzz, aaaaaa	N	
RP	Apollo/Conbra	RPLF4A	#	H	########		Y	10	(yyy), cccc, dddd, mmmm, nnnn, xxxxx, yyyyy, zzzzz, aaaaaa	N	
RP	Apollo/Conbra	RPLF4AN	####	VUVU	########		Y	10	(yyy), cccc, dddd, mmmm, nnnn, xxxxx, yyyyy, zzzzz, aaaaaa	N	
RP	Apollo/Conbra	RPLF4AN	####	VUVU	########		Y	10	(yyy), cccc, dddd, mmmm, nnnn, xxxxx, yyyyy, zzzzz, aaaaaa	N	
RP	Apollo/Conbra	RPLF4AN	#	VUVU	########		Y	10	(yyy), cccc, dddd, mmmm, nnnn, xxxxx, yyyyy, zzzzz, aaaaaa	N	
RP	Apollo/Conbra	RPLF4AN	#	VUVU	########		Y	10	(yyy), cccc, dddd, mmmm, nnnn, xxxxx, yyyyy, zzzzz, aaaaaa	N	
RP	Apollo/Conbra	RPLF4AN	#	VUVU	########		Y	10	(yyy), cccc, dddd, mmmm, nnnn, xxxxx, yyyyy, zzzzz, aaaaaa	N	
RP	Apollo/Conbra	RPLF4AR	####	H	########		N	10	(cccc), dddd, mmmm, nnnn, xxxxx, yyyyy, zzzzz, aaaaaa	N	
RP	Apollo/Conbra	RPLF4AR	#	H	########		N	10	(cccc), dddd, mmmm, nnnn, xxxxx, yyyyy, zzzzz, aaaaaa	N	
RP	Apollo/Conbra	RPLF4AR	#	H	########		N	10	(cccc), dddd, mmmm, nnnn, xxxxx, yyyyy, zzzzz, aaaaaa	N	
RP	Apollo/Conbra	RPLF4AR	#	H	########		N	10	(cccc), dddd, mmmm, nnnn, xxxxx, yyyyy, zzzzz, aaaaaa	N	
RP	Apollo/Conbra	RPS40	1/4	H	########	########	N	8	(uuu)	N	
RP	Apollo/Conbra	RPS40	3/8	H	########	########	N	8	(uuu)	N	
RP	Apollo/Conbra	RPS40	1/2	H	########	########	N	8	(dd)	N	
RP	Apollo/Conbra	RPS40	3/4	H	########	########	N	8	(uuu)	N	
RP	ARI	RP 500	1/2	H	########	########	N	9	(ooooo), ii, ooo	N	
RP	ARI	RP 500	1/2	H	########		Y	9	(ooooo)	N	
RP	ARI	RP 500	3/4	H	########	########	N	9	(ii),ooo, ooooo	N	
RP	ARI	RP 500	3/4	H	########		Y	9	(ooooo)	N	
RP	ARI	RP 500	#	H	########	########	N	9	(ii),ooo, ooooo	N	
RP	ARI	RP 500	#	H	########		Y	9	(ooooo)	N	

Type	Manufacturer	Model	Size	Orientation(s)	Approved	Renewed	≤0.25% Pb	Manual	Shutoffs	Spare Parts	Bypass
RP	ARI	RP 500	####	H	########		Y	10	(ooooo)	N	
RP	ARI	RP 500	####	H	########		Y	10	(ooooo)	N	
RP	ARI	RP 500	#	H	########		Y	10	(ooooo)	N	
RP	Cash Acme	RP 500	3/4	H	########	########	Y	9	(ii),ooo	N	
RP	Cash Acme	RP 500	#	H	########	########	Y	9	(ii),ooo	N	
RP	Cash Acme	RP100	3/4	H	########	########	N	8	(ii)	N	
RP	Cash Acme	RP100	#	H	########	########	N	8	(ii)	N	
RP	Cash Acme	RP100	####	H	########	########	N	8	(ii)	N	
RP	Cash Acme	RP100	#	H	########	########	N	8	(ii)	N	
RP	Cash Acme	RP200	1/2	H	########	########	N	8	(ii)	N	
RP	Cash Acme	RP200	3/4	H	########	########	N	8	(ii)	N	
RP	Cla-Val	RP4	#	H	########	########	N	8	(gg),hh,qq,rr	Y	
RP	Cla-Val	RP4	##	H	########	########	N	8	(gg),hh,qq,rr	Y	
RP	Conbraco						N				
RP	Febco	860	1/2	H	########	########	N	9	(fff),ooo	N	
RP	Febco	860	3/4	H	########	########	N	9	(fff),jjj,ooo	N	
RP	Febco	860	#	H	########	########	N	9	(fff),jjj,ooo	N	
RP	Febco	860	####	H	########	########	N	9	(fff),jjj,ooo	N	
RP	Febco	860	####	H	########	########	N	9	(fff),jjj,ooo	N	
RP	Febco	860	#	H	########	########	N	9	(fff),ooo	Y	
RP	Febco	860	####	H	########	########	N	8	(ee),ff,ll,mm,oo,pp,tt,uu.zzz,cccc,ffff,gggg	Y	
RP	Febco	860	#	H	########	########	N	8	(ee),ff,ll,mm,oo,pp,tt,uu.zzz,cccc,ffff,gggg	Y	
RP	Febco	860	#	H	########	########	N	8	(ee),ff,ll,mm,oo,pp,tt,uu,nnn,zzz,cccc,ffff,gggg	Y	
RP	Febco	860	#	H	########	########	N	8	(ee),ff,ll,mm,oo,pp,tt,uu,nnn,zzz,cccc,ffff,gggg	Y	
RP	Febco	860	#	H	########	########	N	8	(ee),ff,ll,mm,oo,pp,tt,uu,nnn,zzz,cccc,ffff,gggg	Y	
RP	Febco	867	####	H	########	########	N	8	(oo), gg, hh,ll, mm, pp, tt, uu, yy, fff	N	
RP	Febco	867	#	H	########	########	N	8	(oo), gg, hh,ll, mm, pp, tt, uu, yy, eee, fff	N	
RP	Febco	880	####	VUVU	########	########	N	8	ee,ff,ll,mm,oo,pp,tt,uu,zzz,ffff,gggg	Y	
RP	Febco	880	#	VUVU	########	########	N	8	ee,ff,ll,mm,oo,pp,tt,uu,zzz,ffff,gggg	Y	
RP	Febco	880	#	VUVU	########	########	N	8	ee,ff,ll,mm,oo,pp,tt,uu,zzz,ffff,gggg	Y	
RP	Febco	880	#	VUVU	########	########	N	8	ee,ff,ll,mm,oo,pp,tt,uu,zzz,ffff,gggg	Y	
RP	Febco	880	#	VUVU	########	########	N	8	ee,ff,ll,mm,oo,pp,tt,uu,zzz,ffff,gggg	Y	
RP	Febco	880	##	VUVU	########	########	N	8	ee,ff,ll,mm,oo,pp,tt,uu,zzz,ffff,gggg	Y	
RP	Febco	760	####	H	########	########	N	9	(ppp),qqq,aaaa,bbbb	N	
RP	Febco	760	####	H	########	########	Y	9	zzz,dddd,eeee,gggg,kkkk,llll,mmmm,nnnn	N	
RP	Febco	760	#	H	########	########	N	9	(ppp),qqq,aaaa,bbbb	N	
RP	Febco	760	#	H	########	########	Y	9	zzz,dddd,eeee,gggg,kkkk,llll,mmmm,nnnn	N	
RP	Febco	760	#	H	########	########	N	9	(ppp),qqq,aaaa,bbbb	N	
RP	Febco	760	#	H	########	########	Y	9	zzz,dddd,eeee,gggg,kkkk,llll,mmmm,nnnn	N	
RP	Febco	760	#	H	########	########	N	9	(ppp),qqq,aaaa,bbbb	N	
RP	Febco	760	#	H	########	########	Y	9	zzz,dddd,eeee,gggg,kkkk,llll,mmmm,nnnn	N	
RP	Febco	760	#	H	########	########	N	9	(ppp),qqq,sss,ttt,aaaa,bbbb	N	
RP	Febco	760	#	H	########	########	Y	9	zzz,cccc,dddd,eeee,gggg,kkkk,llll,mmmm,nnnn	N	
RP	Febco	760	##	H	########	########	N	9	(ppp),qqq,sss,ttt,aaaa,bbbb	N	
RP	Febco	760	##	H	########	########	Y	9	zzz,cccc,dddd,eeee,gggg,kkkk,llll,mmmm,nnnn	N	
RP	Febco	760N	####	VUVU	########	########	N	9	(ppp),qqq,aaaa,bbbb	N	
RP	Febco	760N	####	VUVU	########	########	Y	9	zzz,dddd,eeee,gggg,kkkk,llll,mmmm,nnnn	N	
RP	Febco	760N	#	VUVU	########	########	N	9	(ppp),qqq,aaaa,bbbb	N	
RP	Febco	760N	#	VUVU	########	########	Y	9	zzz,dddd,eeee,gggg,kkkk,llll,mmmm,nnnn	N	
RP	Febco	760N	#	VUVU	########	########	N	9	(ppp),qqq,aaaa,bbbb	N	
RP	Febco	760N	#	VUVU	########	########	Y	9	zzz,dddd,eeee,gggg,kkkk,llll,mmmm,nnnn	N	
RP	Febco	760Z	####	VUVU	########	########	N	9	(ppp),qqq,aaaa,bbbb	N	
RP	Febco	760Z	####	VUVU	########	########	Y	9	zzz,dddd,eeee,gggg,kkkk,llll,mmmm,nnnn	N	
RP	Febco	760Z	#	VUVU	########	########	N	9	(ppp),qqq,aaaa,bbbb	N	
RP	Febco	760Z	#	VUVU	########	########	Y	9	zzz,dddd,eeee,gggg,kkkk,llll,mmmm,nnnn	N	
RP	Febco	760Z	#	VUVU	########	########	N	9	(ppp),qqq,aaaa,bbbb	N	
RP	Febco	760Z	#	VUVU	########	########	Y	9	zzz,dddd,eeee,gggg,kkkk,llll,mmmm,nnnn	N	
RP	Febco	825Y	3/4	H	########	########	N	6	(ii),fff,jjj,ooo	N	
RP	Febco	825Y	#	H	########	########	N	6	(ii),fff,jjj,ooo	N	
RP	Febco	825Y	####	H	########	########	N	6	ii,fff,jjj,ooo	Y	
RP	Febco	825Y	####	H	########	########	N	6	(ii),fff,jjj,ooo	N	
RP	Febco	825Y	#	H	########	########	N	6	(ii),fff,ooo	N	
RP	Febco	825YA	3/4	H	########	########	N	8	(ii),fff,jjj,ooo	N	
RP	Febco	825YA	3/4	HVD	########	########	N	8	(ii),fff,jjj,ooo	N	
RP	Febco	825YA	3/4	VUH	########	########	N	8	(ii),fff,jjj,ooo	N	
RP	Febco	825YA	3/4	VUVU	########	########	N	8	(ii),fff,jjj,ooo	N	
RP	Febco	825YA	#	H	########	########	N	8	(ii),fff,jjj,ooo	N	
RP	Febco	825YA	#	HVD	########	########	N	8	(ii),fff,jjj,ooo	N	
RP	Febco	825YA	#	VUH	########	########	N	8	(ii),fff,jjj,ooo	N	
RP	Febco	825YA	#	VUVU	########	########	N	8	(ii),fff,jjj,ooo	N	
RP	Febco	825YA	####	H	########	########	N	8	(ii),fff,jjj,ooo	N	
RP	Febco	825YA	####	HVD	########	########	N	8	(ii),fff,jjj,ooo	N	
RP	Febco	825YA	####	VUH	########	########	N	8	(ii),fff,jjj,ooo	N	
RP	Febco	825YA	####	VUVU	########	########	N	8	(ii),fff,jjj,ooo	N	
RP	Febco	825YA	#	H	########	########	N	8	(ii),fff,ooo	N	
RP	Febco	825YA	#	HVD	########	########	N	8	(ii),fff,ooo	N	
RP	Febco	825YA	#	VUH	########	########	N	8	(ii),fff,ooo	N	
RP	Febco	825YA	#	VUVU	########	########	N	8	(ii),fff,ooo	N	
RP	Febco	825YAR	3/4	H	########	########	N	8	ii,fff,jjj,ooo	Y	
RP	Febco	825YAR	3/4	HVD	########	########	N	8	ii,fff,jjj,ooo	Y	
RP	Febco	825YAR	3/4	VUH	########	########	N	8	ii,fff,jjj,ooo	Y	
RP	Febco	825YAR	3/4	VUVU	########	########	N	8	ii,fff,jjj,ooo	Y	
RP	Febco	825YAR	#	H	########	########	N	8	ii,fff,jjj,ooo	Y	
RP	Febco	825YAR	#	HVD	########	########	N	8	ii,fff,jjj,ooo	Y	
RP	Febco	825YAR	#	VUH	########	########	N	8	ii,fff,jjj,ooo	Y	
RP	Febco	825YAR	#	VUVU	########	########	N	8	ii,fff,jjj,ooo	Y	
RP	Febco	825YAR	####	H	########	########	N	8	ii,fff,jjj,ooo	Y	
RP	Febco	825YAR	####	HVD	########	########	N	8	ii,fff,jjj,ooo	Y	
RP	Febco	825YAR	####	VUH	########	########	N	8	ii,fff,jjj,ooo	Y	
RP	Febco	825YAR	####	VUVU	########	########	N	8	ii,fff,jjj,ooo	Y	
RP	Febco	825YAR	#	H	########	########	N	8	ii,fff,ooo	Y	
RP	Febco	825YAR	#	HVD	########	########	N	8	ii,fff,ooo	Y	
RP	Febco	825YAR	#	VUH	########	########	N	8	ii,fff,ooo	Y	
RP	Febco	825YAR	#	VUVU	########	########	N	8	ii,fff,ooo	Y	
RP	Febco	825YD	####	H	########	########	N	7	(ee),ff,ll,mm,oo,pp,tt,uu,zzz,ffff,gggg	Y	
RP	Febco	825YD	#	H	########	########	N	7	(ee),ff,ll,mm,oo,pp,tt,uu,zzz,ffff,gggg	Y	
RP	Febco	825YD	#	H	########	########	N	7	(ee),ff,ll,mm,oo,pp,tt,uu,zzz,ffff,gggg	Y	
RP	Febco	825YD	#	H	########	########	N	7	(ee),ff,ll,mm,oo,pp,tt,uu,zzz,ffff,gggg	Y	
RP	Febco	825YD	#	H	########	########	N	7	(ee),ff,ll,mm,oo,pp,tt,uu,zzz,ffff,gggg	Y	
RP	Febco	825YD	##	H	########	########	N	7	(ee),ff,ll,mm,oo,pp,tt,uu,zzz,ffff,gggg	Y	
RP	Febco	825YR	3/4	H	########	########	N	8	ii,fff,jjj	Y	
RP	Febco	825YR	#	H	########	########	N	8	ii,fff,jjj	Y	
RP	Febco	825YR	####	H	########	########	N	8	ii,fff,jjj	Y	
RP	Febco	825YR	#	H	########	########	N	8	ii,fff	Y	
RP	Febco	860U	1/2	H	########	########	N	9	(kkk)	N	
RP	Febco	860U	3/4	H	########	########	N	9	(kkk)	N	
RP	Febco	860U	#	H	########	########	N	9	(kkk)	N	
RP	Febco	860U	####	H	########	########	N	9	(kkk)	N	
RP	Febco	860U	####	H	########	########	N	9	(kkk)	N	
RP	Febco	860U	#	H	########	########	N	9	(kkk)	N	
RP	Febco	880V	####	VUVU	########	########	N	8	(ee),ff,ll,mm,oo,pp,tt,uu,nnn,zzz,cccc,ffff,gggg	Y	
RP	Febco	880V	####	VUVU	########	########	N	8	(ee),ff,ll,mm,oo,pp,tt,uu,nnn,zzz,cccc,ffff,gggg	Y	
RP	Febco	880V	#	VUVU	########	########	N	8	(ee),ff,ll,mm,oo,pp,tt,uu,nnn,zzz,cccc,ffff,gggg	Y	
RP	Febco	880V	#	VUVU	########	########	N	8	(ee),ff,ll,mm,oo,pp,tt,uu,nnn,zzz,cccc,ffff,gggg	Y	
RP	Febco	880V	#	VUVU	########	########	N	8	(ee),ff,ll,mm,oo,pp,tt,uu,nnn,zzz,cccc,ffff,gggg	Y	
RP	Febco	880V	#	VUVU	########	########	N	8	(ee),ff,ll,mm,oo,pp,tt,uu,nnn,zzz,cccc,ffff,gggg	Y	
RP	Febco	880V	#	VUVU	########	########	N	8	(ee),ff,ll,mm,oo,pp,tt,uu,nnn,zzz,cccc,ffff,gggg	Y	
RP	Febco	880V	#	VUVU	########	########	N	8	(ee),ff,ll,mm,oo,pp,tt,uu,nnn,zzz,cccc,ffff,gggg	Y	
RP	Febco	880V	#	VUVU	########	########	N	8	(ee),ff,ll,mm,oo,pp,tt,uu,nnn,zzz,cccc,ffff,gggg	Y	
RP	Febco	880V	##	VUVU	########	########	N	8	(ee),ff,ll,mm,oo,pp,tt,uu,nnn,zzz,cccc,ffff,gggg	Y	
RP	Febco	880V	##	VUVU	########	########	N	8	(ee),ff,ll,mm,oo,pp,tt,uu,nnn,zzz,cccc,ffff,gggg	Y	
RP	Febco	LF825Y	3/4	H	########	########	Y	8	(hhhh)	N	
RP	Febco	LF825Y	#	H	########	########	Y	8	(hhhh)	N	
RP	Febco	LF825Y	####	H	########	########	Y	8	(hhhh)	N	

Type	Manufacturer	Model	Size	Orientation(s)	Approved	Renewed	≤0.25% Pb	Manual	Shutoffs	Spare Parts	Bypass
RP	Febco	LF825Y	#	H	########	########	Y	8	(hhhh)	N	
RP	Febco	LF825YA	3/4	H	########	########	Y	8	(hhhh)	N	
RP	Febco	LF825YA	3/4	HVD	########	########	Y	8	(hhhh)	N	
RP	Febco	LF825YA	3/4	VUH	########	########	Y	8	(hhhh)	N	
RP	Febco	LF825YA	3/4	VUVB	########	########	Y	8	(hhhh)	N	
RP	Febco	LF825YA	#	H	########	########	Y	8	(hhhh)	N	
RP	Febco	LF825YA	#	HVD	########	########	Y	8	(hhhh)	N	
RP	Febco	LF825YA	#	VUH	########	########	Y	8	(hhhh)	N	
RP	Febco	LF825YA	#	VUVB	########	########	Y	8	(hhhh)	N	
RP	Febco	LF825YA	####	H	########	########	Y	8	(hhhh)	N	
RP	Febco	LF825YA	####	HVD	########	########	Y	8	(hhhh)	N	
RP	Febco	LF825YA	####	VUH	########	########	Y	8	(hhhh)	N	
RP	Febco	LF825YA	####	VUVB	########	########	Y	8	(hhhh)	N	
RP	Febco	LF825YA	#	H	########	########	Y	8	(hhhh)	N	
RP	Febco	LF825YA	#	HVD	########	########	Y	8	(hhhh)	N	
RP	Febco	LF825YA	#	VUH	########	########	Y	8	(hhhh)	N	
RP	Febco	LF825YA	#	VUVB	########	########	Y	8	(hhhh)	N	
RP	Febco	LF860	1/2	H	########	########	Y	9	(qqqqq), hhhh	N	
RP	Febco	LF860	3/4	H	########	########	Y	9	(qqqqq), hhhh	N	
RP	Febco	LF860	#	H	########	########	Y	9	(qqqqq), hhhh	N	
RP	Febco	LF860	####	H	########	########	Y	9	(qqqqq), hhhh	N	
RP	Febco	LF860	####	H	########	########	Y	9	(qqqqq), hhhh	N	
RP	Febco	LF860	#	H	########	########	Y	9	(qqqqq), hhhh	N	
RP	Febco	LF860	####	H	########		Y	9	(ll),mm,oo,pp,zzz,cccc,dddd,eeee,ffff,gggg,nnnnn	N	
RP	Febco	LF860	#	H	########		Y	9	(ll),mm,oo,pp,zzz,cccc,dddd,eeee,ffff,gggg,nnnnn	N	
RP	Febco	LF860	#	H	########		Y	9	(ll),mm,oo,pp,zzz,cccc,dddd,eeee,ffff,gggg,nnnnn	N	
RP	Febco	LF860	#	H	########		Y	9	(ll),mm,oo,pp,zzz,cccc,dddd,eeee,ffff,gggg,nnnnn	N	
RP	Febco	LF860	#	H	########		Y	9	(ll),mm,oo,pp,zzz,cccc,dddd,eeee,ffff,gggg,nnnnn	N	
RP	Febco	LF860	##	H	########		Y	9	(ll),mm,oo,pp,zzz,cccc,dddd,eeee,ffff,gggg,nnnnn	N	
RP	Febco	LF860U	1/2	H	########		Y	9	(ppppp), hhhh	N	
RP	Febco	LF860U	3/4	H	########		Y	9	(ppppp), hhhh	N	
RP	Febco	LF860U	#	H	########		Y	9	(ppppp), hhhh	N	
RP	Febco	LF860U	####	H	########		Y	9	(ppppp), hhhh	N	
RP	Febco	LF860U	####	H	########		Y	9	(ppppp), hhhh	N	
RP	Febco	LF860U	#	H	########		Y	9	(ppppp), hhhh	N	
RP	Febco	LF880V	####	VUVB	########		Y	9	(ll),mm,oo,pp,zzz,cccc,dddd,eeee,ffff,gggg,nnnnn	N	
RP	Febco	LF880V	####	VUVB	########		Y	9	(ll),mm,oo,pp,zzz,cccc,dddd,eeee,ffff,gggg,nnnnn	N	
RP	Febco	LF880V	#	VUVB	########		Y	9	(ll),mm,oo,pp,zzz,cccc,dddd,eeee,ffff,gggg,nnnnn	N	
RP	Febco	LF880V	#	VUVB	########		Y	9	(ll),mm,oo,pp,zzz,cccc,dddd,eeee,ffff,gggg,nnnnn	N	
RP	Febco	LF880V	#	VUVB	########		Y	9	(ll),mm,oo,pp,zzz,cccc,dddd,eeee,ffff,gggg,nnnnn	N	
RP	Febco	LF880V	#	VUVB	########		Y	9	(ll),mm,oo,pp,zzz,cccc,dddd,eeee,ffff,gggg,nnnnn	N	
RP	Febco	LF880V	#	VUVB	########		Y	9	(ll),mm,oo,pp,zzz,cccc,dddd,eeee,ffff,gggg,nnnnn	N	
RP	Febco	LF880V	#	VUVB	########		Y	9	(ll),mm,oo,pp,zzz,cccc,dddd,eeee,ffff,gggg,nnnnn	N	
RP	Febco	LF880V	#	VUVB	########		Y	9	(ll),mm,oo,pp,zzz,cccc,dddd,eeee,ffff,gggg,nnnnn	N	
RP	Flomatic	RPZ	3/4	H	########	########	N	8	ii	Y	
RP	Flomatic	RPZ	#	H	########	########	N	8	ii	Y	
RP	Flomatic	RPZ	####	H	########	########	N	8	ii	Y	
RP	Flomatic	RPZ	#	H	########	########	N	8	ii	Y	
RP	Flomatic	RPZ	####	H	########	########	N	8	(gg),hh,jj,kk,ll,mm,yy,zz,ccc,ddd	Y	
RP	Flomatic	RPZ	#	H	########	########	N	8	(gg),hh,jj,kk,ll,mm,yy,zz,ccc,ddd	Y	
RP	Flomatic	RPZ	#	H	########	########	N	9	(gg),hh,jj,kk,ll,mm,yy,zz,ccc,ddd	Y	
RP	Flomatic	RPZ	#	H	########	########	Y	9	ddddd	Y	
RP	Flomatic	RPZ	#	H	########	########	N	9	(gg),hh,jj,kk,ll,mm,yy,zz,ccc,ddd	Y	
RP	Flomatic	RPZ	#	H	########	########	Y	9	ddddd	Y	
RP	Flomatic	RPZ	#	H	########	########	N	9	(gg), hh, jj, kk, ll, mm, yy, zz, ccc, ddd	Y	
RP	Flomatic	RPZE	3/4	H	########	########	Y	8	(hhhhh)	Y	
RP	Flomatic	RPZE	#	H	########	########	Y	8	(hhhhh)	Y	
RP	Flomatic	RPZE	####	H	########	########	Y	8	(hhhhh)	Y	
RP	Flomatic	RPZE	#	H	########	########	Y	8	(hhhhh)	Y	
RP	Flomatic	RPZE II	1/2	H	########	########	Y	8	(hhhhh)	Y	
RP	Flomatic	RPZE II	3/4	H	########	########	Y	8	(hhhhh)	Y	
RP	Flomatic	RPZII	1/2	H	########	########	N	8	ii	Y	
RP	Flomatic	RPZII	3/4	H	########	########	N	8	ii	Y	
RP	Flomatic	RPZIIE	1/2								
RP	Flomatic	RPZIIE	3/4								
RP	Neptune						N				
RP	Watts	957	####	H	########	########	N	9	(ppp),qqq,aaaa,bbbb	N	
RP	Watts	957	####	H	########	########	Y	9	zzz,dddd,eeee,gggg,kkkk,llll,mmmm,nnnn,nnnnn	N	
RP	Watts	957	#	H	########	########	N	9	(ppp),qqq,aaaa,bbbb	N	
RP	Watts	957	#	H	########	########	Y	9	zzz,dddd,eeee,gggg,kkkk,llll,mmmm,nnnn,nnnnn	N	
RP	Watts	957	#	H	########	########	N	9	(ppp),qqq,aaaa,bbbb	N	
RP	Watts	957	#	H	########	########	Y	9	zzz,dddd,eeee,gggg,kkkk,llll,mmmm,nnnn,nnnnn	N	
RP	Watts	957	#	H	########	########	N	9	(ppp),qqq,aaaa,bbbb	N	
RP	Watts	957	#	H	########	########	Y	9	zzz,dddd,eeee,gggg,kkkk,llll,mmmm,nnnn,nnnnn	N	
RP	Watts	957	#	H	########	########	N	9	(ppp),qqq,aaaa,bbbb	N	
RP	Watts	957	#	H	########	########	Y	9	zzz,cccc,dddd,eeee,gggg,kkkk,llll,mmmm,nnnn,nnnnn	N	
RP	Watts	957	##	H	########	########	N	9	(ppp),qqq,aaaa,bbbb	N	
RP	Watts	957	##	H	########	########	Y	9	zzz,cccc,dddd,eeee,gggg,kkkk,llll,mmmm,nnnn,nnnnn	N	
RP	Watts	967	####	H	########	########	N	9	(ppp),qqq,zzz,aaaa,bbbb,dddd,eeee,ffff,gggg,kkkk,llll,mmmm,nnnn,nnnnn	N	
RP	Watts	967	#	H	########	########	N	9	(ppp),qqq,zzz,aaaa,bbbb,dddd,eeee,ffff,gggg,kkkk,llll,mmmm,nnnn,nnnnn	N	
RP	Watts	967	#	H	########	########	N	9	(ppp),qqq,aaaa,bbbb,gggg,kkkk,llll,mmmm,nnnn,nnnnn	N	
RP	Watts	967	#	H	########	########	N	9	(ppp),qqq,sss, ttt, aaaa,bbbb,cccc,dddd,kkkk,llll,mmmm,nnnn,nnnnn	N	
RP	Watts	967	#	H	########	########	N	9	(ppp),qqq,sss,ttt,zzz,aaaa,bbbb,cccc,dddd,eeee,gggg,kkkk,llll,mmmm,nnnn,nnnnn	N	
RP	Watts	967	##	H	########	########	N	9	(ppp),qqq,sss,ttt,zzz,aaaa,bbbb,cccc,dddd,eeee,gggg,kkkk,llll,mmmm,nnnn	N	
RP	Watts	994	####	H	########	########	N	8	(tt),ee,ff,gg,hh,pp,uu,ccc,ddd	N	
RP	Watts	994	####	H	########	########	Y	8	ll,mm,oo,ffff,gggg	N	
RP	Watts	994	#	H	########	########	N	8	(tt),ee,ff,gg,hh,pp,uu,ccc,ddd	N	
RP	Watts	994	#	H	########	########	Y	8	ll,mm,oo,ffff,gggg	N	
RP	Watts	994	#	H	########	########	N	8	(tt),ee,ff,gg,hh,pp,uu,ccc,ddd	N	
RP	Watts	994	#	H	########	########	Y	8	ll,mm,oo,ffff,gggg	N	
RP	Watts	994	#	H	########	########	N	8	(tt),ee,ff,gg,hh,pp,uu,ccc,ddd	N	
RP	Watts	994	#	H	########	########	Y	8	ll,mm,oo,ffff,gggg	N	
RP	Watts	009	####	H	########	########	N	8	(oo),gg,hh,ll,mm,pp,tt,uu,yy,ffff,gggg	N	
RP	Watts	009	#	H	########	########	N	8	(oo),gg,hh,ll,mm,pp,tt,uu,yy,eee,ffff,gggg	N	
RP	Watts	009M1PCQT	####	H	########	########	N	8	vv,xx,ooo,hhhh,pppp,rrrrr	Y	
RP	Watts	009M1PCQT	####	H	########	########	N	8	vv,xx,ooo,hhhh,pppp,rrrrr	Y	
RP	Watts	009M1PCQT	#	H	########	########	N	8	vv,xx,ooo,hhhh,pppp,rrrrr	Y	
RP	Watts	009M1QT	####	H	########	########	N	8	vv,xx,ooo,hhhh,pppp,rrrrr	Y	
RP	Watts	009M1QT	####	H	########	########	N	8	vv,xx,ooo,hhhh,pppp,rrrrr	Y	
RP	Watts	009M1QT	#	H	########	########	N	8	vv,xx,ooo,hhhh,pppp,rrrrr	Y	
RP	Watts	009M2-FP	#	H	########	########	N	9	(eeeee)	N	
RP	Watts	009M2-FP	####	H	########	########	N	9	(eeeee)	N	
RP	Watts	009M2-FP	####	H	########	########	N	9	(eeeee)	N	
RP	Watts	009M2-FP	#	H	########	########	N	9	(eeeee)	N	
RP	Watts	009M2PCQT	3/4	H	########	########	N	8	(vv),xx,ooo,hhhh,pppp,rrrrr	N	
RP	Watts	009M2PCQT	#	H	########	########	N	9	(vv),xx,ooo,hhhh,pppp,rrrrr	N	
RP	Watts	009M2PCQT	####	H	########	########	N	8	(vv),xx,ooo,hhhh,pppp,rrrrr	N	
RP	Watts	009M2PCQT	####	H	########	########	N	8	(vv),xx,ooo,hhhh,pppp,rrrrr	N	
RP	Watts	009M2PCQT	#	H	########	########	N	9	(vv),xx,ooo,hhhh,pppp,rrrrr	N	
RP	Watts	009M2QT	3/4	H	########	########	N	8	(vv),xx,ooo,hhhh,pppp,rrrrr	N	
RP	Watts	009M2QT	#	H	########	########	N	9	(vv),xx,ooo,hhhh,pppp,rrrrr	N	
RP	Watts	009M2QT	####	H	########	########	N	8	(vv),xx,ooo,hhhh,pppp,rrrrr	N	
RP	Watts	009M2QT	####	H	########	########	N	8	(vv),xx,ooo,hhhh,pppp,rrrrr	N	
RP	Watts	009M2QT	#	H	########	########	N	9	(vv),xx,ooo,hhhh,pppp,rrrrr	N	
RP	Watts	009M3-FP	3/4	H	########	########	N	9	(eeeee)	N	
RP	Watts	009M3QT	3/4	H	########	########	N	9	(vv),xx,ooo,hhhh,pppp,rrrrr	N	
RP	Watts	009PCQT	1/2	H	########	########	N	8	(vv),xx,ooo,hhhh,pppp,rrrrr	N	
RP	Watts	009PCQT	3/4	H	########	########	N	8	(vv),xx,ooo,hhhh,pppp,rrrrr	N	
RP	Watts	009PCQT	#	H	########	########	N	8	vv,xx,ooo,hhhh,pppp,rrrrr	Y	
RP	Watts	009PCQT	####	H	########	########	N	8	vv,xx,ooo,hhhh,pppp,rrrrr	Y	
RP	Watts	009PCQT	####	H	########	########	N	8	vv,xx,ooo,hhhh,pppp,rrrrr	Y	
RP	Watts	009PCQT	#	H	########	########	N	8	vv,xx,ooo,hhhh,pppp,rrrrr	Y	
RP	Watts	009QT	1/4	H	########	########	N	8	(vv),xx,ooo,hhhh,pppp	N	
RP	Watts	009QT	3/8	H	########	########	N	8	(vv),xx,ooo,hhhh,pppp	N	

Type	Manufacturer	Model	Size	Orientation(s)	Approved	Renewed	≤0.25% Pb	Manual	Shutoffs	Spare Parts	Bypass
RP	Watts	009QT	1/2	H	########	########	N	9	(vv),xx,ooo,hhhh,pppp,rrrrr	N	
RP	Watts	009QT	3/4	H	########	########	N	7	(vv),xx,ooo,hhhh,pppp,rrrrr	N	
RP	Watts	009QT	#	H	########	########	N	7	vv,xx,ooo,hhhh,pppp,rrrrr	Y	
RP	Watts	009QT	####	H	########	########	N	7	vv,xx,ooo,hhhh,pppp,rrrrr	Y	
RP	Watts	009QT	####	H	########	########	N	7	vv,xx,ooo,hhhh,pppp,rrrrr	Y	
RP	Watts	009QT	#	H	########	########	N	7	vv,xx,ooo,hhhh,pppp,rrrrr	Y	
RP	Watts	009SSM1PCQT	#	H	########	########	N	8	vv,xx,pppp	Y	
RP	Watts	009SSM1QT	#	H	########	########	N	8	vv,xx,pppp	Y	
RP	Watts	009SSPCQT	3/4	H	########	########	N	8	vv,xx,pppp	Y	
RP	Watts	009SSPCQT	#	H	########	########	N	8	vv,xx,pppp	Y	
RP	Watts	009SSPCQT	####	H	########	########	N	8	vv,xx,pppp	Y	
RP	Watts	009SSPCQT	####	H	########	########	N	8	vv,xx,pppp	Y	
RP	Watts	009SSPCQT	#	H	########	########	N	8	vv,xx,pppp	Y	
RP	Watts	009SSQT	3/4	H	########	########	N	7	vv,xx,pppp	Y	
RP	Watts	009SSQT	#	H	########	########	N	7	vv,xx,pppp	Y	
RP	Watts	009SSQT	####	H	########	########	N	7	vv,xx,pppp	Y	
RP	Watts	009SSQT	####	H	########	########	N	7	vv,xx,pppp	Y	
RP	Watts	009SSQT	#	H	########	########	N	7	vv,xx,pppp	Y	
RP	Watts	909	####	H	########	########	N	7	(oo),gg,hh,ll,mm,pp,tt,uu,ww,yy,ffff,gggg	N	
RP	Watts	909	#	H	########	########	N	7	(oo),gg,hh,ll,mm,pp,tt,uu,ww,yy,eee,ffff,gggg	N	
RP	Watts	909	#	H	########	########	N	6	(oo),gg,hh,ll,mm,pp,tt,uu,ww,yy,eee,ffff,gggg	N	
RP	Watts	909	#	H	########	########	N	6	(oo),gg,hh,ll,mm,pp,tt,uu,ww,yy,eee,ffff,gggg	N	
RP	Watts	909	#	H	########	########	N	6		Y	
RP	Watts	909	##	H	########	########	N	6		Y	
RP	Watts	909BB	####	H	########	########	N	6	(oo),gg,hh,ll,mm,pp,tt,uu,yy,ffff,gggg	N	
RP	Watts	909BB	#	H	########	########	N	6	(oo),gg,hh,ll,mm,pp,tt,uu,yy,ffff,gggg	N	
RP	Watts	909HWQT	3/4	H	########	########	N	5	(vv),xx,ooo,hhhh,pppp,rrrrr	N	
RP	Watts	909HWQT	#	H	########	########	N	5	(vv),xx,ooo,hhhh,pppp,rrrrr	N	
RP	Watts	909HWQT	####								
RP	Watts	909HWQT	####								
RP	Watts	909HWQT	#								
RP	Watts	909M1	#	H	########	########	N	8	(oo),gg,hh,ll,mm,pp,tt,uu,yy,ww,ffff,gggg	N	
RP	Watts	909M1	##	H	########	########	N	8	(oo),gg,hh,ll,mm,pp,tt,uu,ww,yy,ffff,gggg	N	
RP	Watts	909M1HWQT	####	H	########	########	N	5	(vv),xx,ooo,hhhh,rrrrr	N	
RP	Watts	909M1HWQT	####	H	########	########	N	5	(vv),xx,ooo,hhhh,rrrrr	N	
RP	Watts	909M1HWQT	#	H	########	########	N	5	(vv),xx,ooo,hhhh,rrrrr	N	
RP	Watts	909M1PCHWQ	####	H	########	########	N	8	(vv),xx,ooo,hhhh,rrrrr	N	
RP	Watts	909M1PCHWQ	####	H	########	########	N	8	(vv),xx,ooo,hhhh,rrrrr	N	
RP	Watts	909M1PCHWQ	#	H	########	########	N	8	(vv),xx,ooo,hhhh,rrrrr	N	
RP	Watts	909M1QT	####	H	########	########	N	6	(vv),xx,ooo,hhhh,pppp,rrrrr	N	
RP	Watts	909M1QT	####	H	########	########	N	6	(vv),xx,ooo,hhhh,pppp,rrrrr	N	
RP	Watts	909M1QT	#	H	########	########	N	6	(vv),xx,ooo,hhhh,pppp,rrrrr	N	
RP	Watts	909NRS	#								
RP	Watts	909NRS	#								
RP	Watts	909NRS	#								
RP	Watts	909NRS	#								
RP	Watts	909NRS	##								
RP	Watts	909NRSRW	#								
RP	Watts	909NRSRW	#								
RP	Watts	909NRSRW	#								
RP	Watts	909NRSRW	#								
RP	Watts	909NRSRW	##								
RP	Watts	909OSY	#								
RP	Watts	909OSY	#								
RP	Watts	909OSY	#								
RP	Watts	909OSY	#								
RP	Watts	909OSY	##								
RP	Watts	909OSYRW	#								
RP	Watts	909OSYRW	#								
RP	Watts	909OSYRW	#								
RP	Watts	909OSYRW	#								
RP	Watts	909OSYRW	##								
RP	Watts	909PCHWQT	3/4	H	########	########	N	8	(vv),xx,ooo,hhhh,pppp,rrrrr	N	
RP	Watts	909PCHWQT	#	H	########	########	N	8	(vv),xx,ooo,hhhh,pppp,rrrrr	N	
RP	Watts	909PCM1QT	####	H	########	########	N	8	(vv),xx,ooo,hhhh,pppp,rrrrr	N	
RP	Watts	909PCM1QT	####	H	########	########	N	8	(vv),xx,ooo,hhhh,pppp,rrrrr	N	
RP	Watts	909PCM1QT	#	H	########	########	N	8	(vv),xx,ooo,hhhh,pppp,rrrrr	N	
RP	Watts	909PCQT	3/4	H	########	########	N	9	(vv),xx,ooo,hhhh,pppp,rrrrr	N	
RP	Watts	909PCQT	3/4	VU	########	########	N	9	(vv),xx,ooo,hhhh,pppp,rrrrr	N	
RP	Watts	909PCQT	#	H	########	########	N	9	(vv),xx,ooo,hhhh,pppp,rrrrr	N	
RP	Watts	909PCQT	#	VU	########	########	N	9	(vv),xx,ooo,hhhh,pppp,rrrrr	N	
RP	Watts	909QT	3/4	H	########	########	N	9	(vv),xx,ooo,hhhh,pppp,rrrrr	N	
RP	Watts	909QT	3/4	VU	########	########	N	9	(vv),xx,ooo,hhhh,pppp,rrrrr	N	
RP	Watts	909QT	#	H	########	########	N	9	(vv),xx,ooo,hhhh,pppp,rrrrr	N	
RP	Watts	909QT	#	VU	########	########	N	9	(vv),xx,ooo,hhhh,pppp,rrrrr	N	
RP	Watts	909QT	####								
RP	Watts	909QT	####								
RP	Watts	909QT	#								
RP	Watts	909RW	#								
RP	Watts	909RW	#								
RP	Watts	909RW	#								
RP	Watts	909RW	#								
RP	Watts	909RW	##								
RP	Watts	919AQT	3/4	VUVU	########	########	N	9	(vv),xx,ooo,hhhh,pppp,rrrrr	N	
RP	Watts	919AQT	#	VUVU	########	########	N	9	(vv),xx,ooo,hhhh,pppp,rrrrr	N	
RP	Watts	919AQT	####	VUVU	########	########	N	9	(vv),xx,ooo,hhhh,pppp,rrrrr	N	
RP	Watts	919AQT	####	VUVU	########	########	N	9	(vv),xx,ooo,hhhh,pppp,rrrrr	N	
RP	Watts	919AQT	#	VUVU	########	########	N	9	(vv),xx,ooo,hhhh,pppp,rrrrr	N	
RP	Watts	919QT	3/4	H	########	########	N	9	(vv),xx,ooo,hhhh,pppp,rrrrr	N	
RP	Watts	919QT	3/4	VD	########	########	N	9	(vv),xx,ooo,hhhh,pppp,rrrrr	N	
RP	Watts	919QT	#	H	########	########	N	9	(vv),xx,ooo,hhhh,pppp,rrrrr	N	
RP	Watts	919QT	#	VD	########	########	N	9	(vv),xx,ooo,hhhh,pppp,rrrrr	N	
RP	Watts	919QT	####	H	########	########	N	9	(vv),xx,ooo,hhhh,pppp,rrrrr	N	
RP	Watts	919QT	####	VD	########	########	N	9	(vv),xx,ooo,hhhh,pppp,rrrrr	N	
RP	Watts	919QT	####	H	########	########	N	9	(vv),xx,ooo,hhhh,pppp,rrrrr	N	
RP	Watts	919QT	####	VD	########	########	N	9	(vv),xx,ooo,hhhh,pppp,rrrrr	N	
RP	Watts	919QT	#	H	########	########	N	9	(vv),xx,ooo,hhhh,pppp,rrrrr	N	
RP	Watts	919QT	#	VD	########	########	N	9	(vv),xx,ooo,hhhh,pppp,rrrrr	N	
RP	Watts	919ZQT	3/4	VUVU	########	########	N	9	(vv),xx,ooo,hhhh,pppp,rrrrr	N	
RP	Watts	919ZQT	#	VUVU	########	########	N	9	(vv),xx,ooo,hhhh,pppp,rrrrr	N	
RP	Watts	919ZQT	####	VUVU	########	########	N	9	(vv),xx,ooo,hhhh,pppp,rrrrr	N	
RP	Watts	919ZQT	####	VUVU	########	########	N	9	(vv),xx,ooo,hhhh,pppp,rrrrr	N	
RP	Watts	919ZQT	#	VUVU	########	########	N	9	(vv),xx,ooo,hhhh,pppp,rrrrr	N	
RP	Watts	957 BF	#	H	########	########	Y	9	(yyy)	N	
RP	Watts	957 BF	#	H	########	########	Y	9	(yyy)	N	
RP	Watts	957N	####	VUVU	########	########	N	9	(ppp),qqq,aaaa,bbbb,nnnnn	N	
RP	Watts	957N	####	VUVU	########	########	Y	9	yyy,zzz,dddd,eeee,gggg,kkkk,llll,mmmm,nnnn	N	
RP	Watts	957N	#	VUVU	########	########	N	9	(ppp),qqq,aaaa,bbbb,nnnnn	N	
RP	Watts	957N	#	VUVU	########	########	Y	9	yyy,zzz,dddd,eeee,gggg,kkkk,llll,mmmm,nnnn	N	
RP	Watts	957N	#	VUVU	########	########	N	9	(ppp),qqq,aaaa,bbbb,nnnnn	N	
RP	Watts	957N	#	VUVU	########	########	Y	9	yyy,zzz,dddd,eeee,gggg,kkkk,llll,mmmm,nnnn	N	
RP	Watts	957N	#	VUVU	########	########	N	9	ppp,qqq,aaaa,bbbb,nnnnn		
RP	Watts	957N	#	VUVU	########	########	Y	9	zzz,dddd,eeee,gggg,kkkk,llll,mmmm,nnnn		
RP	Watts	957N	#	VUVU	########		N	9	ppp, qqq, aaaa, bbbb,		
RP	Watts	957N	#	VUVU	########		Y	9	(yyy), zzz, dddd, eeee, gggg, kkkk, llll, mmmm, nnnn		
RP	Watts	957NQT	####	VUVU	########	########	Y	9	(fffff)	N	
RP	Watts	957NQT	#	VUVU	########	########	Y	9	(fffff)	N	
RP	Watts	957NQT	#	VUVU	########	########	Y	9	(fffff)	N	
RP	Watts	957QT	####	H	########	########	Y	9	(fffff)	N	
RP	Watts	957QT	#	H	########	########	Y	9	(fffff)	N	
RP	Watts	957QT	#	H	########	########	Y	9	(fffff)	N	
RP	Watts	957Z	####	VUVU	########	########	N	9	(ppp),qqq,aaaa,bbbb,nnnnn	N	
RP	Watts	957Z	####	VUVU	########	########	Y	9	yyy,zzz,dddd,eeee,gggg,kkkk,llll,mmmm,nnnn	N	
RP	Watts	957Z	#	VUVU	########	########	N	9	(ppp),qqq,aaaa,bbbb,nnnnn	N	
RP	Watts	957Z	#	VUVU	########	########	Y	9	yyy,zzz,dddd,eeee,gggg,kkkk,llll,mmmm,nnnn	N	

Type	Manufacturer	Model	Size	Orientation(s)	Approved	Renewed	≤0.25% Pb	Manual	Shutoffs	Spare Parts	Bypass
RP	Watts	957Z	#	VUVU	########	########	N	9	(ppp),qqq,aaaa,bbbb,nnnnn	N	
RP	Watts	957Z	#	VUVU	########	########	Y	9	yyy,zzz,dddd,eeee,gggg,kkkk,llll,mmmm,nnnn	N	
RP	Watts	957Z	#	VUVU	########		N	9	ppp, qqq, aaaa, bbbb,		
RP	Watts	957Z	#	VUVU	########		Y	9	(yyy), zzz, dddd, eeee, gggg, kkkk, llll, mmmm, nnnn		
RP	Watts	957ZQT	####	VUVU	########	########	Y	9	(fffff)	N	
RP	Watts	957ZQT	#	VUVU	########	########	Y	9	(fffff)	N	
RP	Watts	957ZQT	#	VUVU	########	########	Y	9	(fffff)	N	
RP	Watts	967N	####	VUVU	########	########	N	9	(ppp),qqq,yyy,zzz,aaaa,bbbb,dddd,eeee,gggg,kkkk,llll,mmmm,nnnn,nnnnn	N	
RP	Watts	967N	#	VUVU	########	########	N	9	(ppp),qqq,zzz,aaaa,bbbb,dddd,eeee,ffff,gggg,kkkk,llll,mmmm,nnnn,nnnnn	N	
RP	Watts	967N	#	VUVU	########	########	N	9	ppp,qqq,aaaa,bbbb,nnnnn		
RP	Watts	967N	#	VUVU	########	########	Y	9	yyy,zzz,dddd,eeee,gggg,kkkk,llll,mmmm,nnnn		
RP	Watts	967N	#	VUVU	########		N	9	ppp, qqq, aaaa, bbbb,		
RP	Watts	967N	#	VUVU	########		Y	9	(yyy), zzz, dddd, eeee, gggg, kkkk, llll, mmmm, nnnn		
RP	Watts	967Z	####	VUVU	########	########	N	9	(ppp),qqq,yyy,zzz,aaaa,bbbb,dddd,eeee,gggg,kkkk,llll,mmmm,nnnn,nnnnn	N	
RP	Watts	967Z	#	VUVU	########	########	N	9	(ppp),qqq,zzz,aaaa,bbbb,dddd,eeee,gggg,kkkk,llll,mmmm,nnnn,nnnnn	N	
RP	Watts	967Z	#	VUVU	########		N	9	ppp, qqq, aaaa, bbbb,		
RP	Watts	967Z	#	VUVU	########		Y	9	(yyy), zzz, dddd, eeee, gggg, kkkk, llll, mmmm, nnnn		
RP	Watts	990	#	H	########	########	N	8	oo,gg,hh,pp,tt,uu,yy	Y	
RP	Watts	990	#	H	########	########	N	8	oo,gg,hh,pp,tt,uu,yy	Y	
RP	Watts	990QTFDA	#	H	########	########	N	8	ww	Y	
RP	Watts	990QTFDA	#	H	########	########	N	8	ww	Y	
RP	Watts	992	#	H	########	########	N	8	oo	Y	
RP	Watts	992	##	H	########	########	N	8	oo	Y	
RP	Watts	995QT	1/2	H	########	########	N	9	int	Y	
RP	Watts	995QT	3/4	H	########	########	N	9	int	Y	
RP	Watts	995QT	#	H	########	########	N	9	int	Y	
RP	Watts	995QT	####	H	########	########	N	9	int	Y	
RP	Watts	995QT	####	H	########	########	N	9	int	Y	
RP	Watts	FAE909HWQT	####	H	########	########	N	5	(vv),xx,ooo,hhhh,pppp	N	
RP	Watts	FAE909HWQT	####	H	########	########	N	5	(vv),xx,ooo,hhhh,pppp	N	
RP	Watts	FAE909HWQT	#	H	########	########	N	5	(vv),xx,ooo,hhhh,pppp	N	
RP	Watts	FAE909QT	####	H	########	########	N	6	(vv),xx,ooo,hhhh,pppp	N	
RP	Watts	FAE909QT	####	H	########	########	N	6	(vv),xx,ooo,hhhh,pppp	N	
RP	Watts	FAE909QT	#	H	########	########	N	6	(vv),xx,ooo,hhhh,pppp	N	
RP	Watts	LF009	####	H	########	########	Y	9	(oo)	N	
RP	Watts	LF009	#	H	########	########	Y	9	(oo)	N	
RP	Watts	LF009M2PCQT	#	H	########		Y	9	(hhhh),rrrrr	N	
RP	Watts	LF009M2PCQT	#	H	########		Y	9	(hhhh),rrrrr	N	
RP	Watts	LF009M2QT	#	H	########	########	Y	9	(hhhh),rrrrr	N	
RP	Watts	LF009M2QT	####	H	########	########	Y	8	(hhhh),rrrrr	N	
RP	Watts	LF009M2QT	####	H	########	########	Y	8	(hhhh),rrrrr	N	
RP	Watts	LF009M2QT	#	H	########	########	Y	9	(hhhh),rrrrr	N	
RP	Watts	LF009M3PCQT	3/4	H	########		Y	9	(hhhh),rrrrr	N	
RP	Watts	LF009M3QT	3/4	H	########	########	Y	9	(hhhh),rrrrr	N	
RP	Watts	LF009PCQT	1/2	H	########		Y	9	(hhhh),rrrrr	N	
RP	Watts	LF009QT	1/2	H	########	########	Y	9	(hhhh),rrrrr	N	
RP	Watts	LF909	####	H	########	########	Y	9	(ll),mm,oo,pp,zzz,cccc,dddd,eeee,ffff,gggg,nnnnn	N	
RP	Watts	LF909	#	H	########	########	Y	9	(ll),mm,oo,pp,zzz,cccc,dddd,eeee,ffff,gggg,nnnnn	N	
RP	Watts	LF909	#	H	########	########	Y	9	(ll),mm,oo,pp,zzz,cccc,dddd,eeee,ffff,gggg,nnnnn	N	
RP	Watts	LF909	#	H	########	########	Y	9	(ll),mm,oo,pp,zzz,cccc,dddd,eeee,ffff,gggg,nnnnn	N	
RP	Watts	LF909M1	#	H	########	########	Y	9	(ll),mm,oo,pp,zzz,cccc,dddd,eeee,ffff,gggg,nnnnn	N	
RP	Watts	LF909M1	##	H	########	########	Y	9	(ll),mm,oo,pp,zzz,cccc,dddd,eeee,ffff,gggg,nnnnn	N	
RP	Watts	LF909M1PCQT	####	H	########		N	9	(hhhh),rrrrr	N	
RP	Watts	LF909M1PCQT	####	H	########		N	9	(hhhh),rrrrr	N	
RP	Watts	LF909M1PCQT	#	H	########		N	9	(hhhh),rrrrr	N	
RP	Watts	LF909M1QT	####	H	########	########	Y	9	(hhhh),rrrrr	N	
RP	Watts	LF909M1QT	####	H	########	########	Y	9	(hhhh),rrrrr	N	
RP	Watts	LF909M1QT	#	H	########	########	Y	9	(hhhh),rrrrr	N	
RP	Watts	LF909PCQT	3/4	H	########		N	9	(hhhh),rrrrr	N	
RP	Watts	LF909PCQT	3/4	VU	########		N	9	(hhhh),rrrrr	N	
RP	Watts	LF909PCQT	#	H	########		N	9	(hhhh),rrrrr	N	
RP	Watts	LF909PCQT	#	VU	########		N	9	(hhhh),rrrrr	N	
RP	Watts	LF909QT	3/4	H	########	########	Y	9	(hhhh),rrrrr	N	
RP	Watts	LF909QT	3/4	VU	########	########	Y	9	(hhhh),rrrrr		
RP	Watts	LF909QT	#	H	########	########	Y	9	(hhhh),rrrrr	N	
RP	Watts	LF909QT	#	VU	########	########	Y	9	(hhhh),rrrrr		
RP	Watts	LF919AQT	3/4	VUVU	########	########	N	9	(vv),xx,ooo,pppp,rrrrr	N	
RP	Watts	LF919AQT	3/4	VUVU	########	########	Y	9	(hhhh),rrrrr	N	
RP	Watts	LF919AQT	#	VUVU	########	########	N	9	(vv),xx,ooo,pppp,rrrrr	N	
RP	Watts	LF919AQT	#	VUVU	########	########	Y	9	(hhhh),rrrrr	N	
RP	Watts	LF919AQT	####	VUVU	########	########	N	9	(vv),xx,ooo,pppp,rrrrr	N	
RP	Watts	LF919AQT	####	VUVU	########	########	Y	9	(hhhh),rrrrr	N	
RP	Watts	LF919AQT	####	VUVU	########	########	N	9	(vv),xx,ooo,pppp,rrrrr	N	
RP	Watts	LF919AQT	####	VUVU	########	########	Y	9	(hhhh),rrrrr	N	
RP	Watts	LF919AQT	#	VUVU	########	########	N	9	(vv),xx,ooo,pppp,rrrrr	N	
RP	Watts	LF919AQT	#	VUVU	########	########	Y	9	(hhhh),rrrrr	N	
RP	Watts	LF919QT	3/4	H	########	########	N	9	(vv),xx,ooo,pppp,rrrrr	N	
RP	Watts	LF919QT	3/4	H	########	########	Y	9	(hhhh),rrrrr	N	
RP	Watts	LF919QT	3/4	VD	########	########	N	9	(vv),xx,ooo,pppp,rrrrr	N	
RP	Watts	LF919QT	3/4	VD	########	########	Y	9	(hhhh),rrrrr	N	
RP	Watts	LF919QT	#	H	########	########	N	9	(vv),xx,ooo,pppp,rrrrr	N	
RP	Watts	LF919QT	#	H	########	########	Y	9	(hhhh),rrrrr	N	
RP	Watts	LF919QT	#	VD	########	########	N	9	(vv),xx,ooo,pppp,rrrrr	N	
RP	Watts	LF919QT	#	VD	########	########	Y	9	(hhhh),rrrrr	N	
RP	Watts	LF919QT	####	H	########	########	N	9	(vv),xx,ooo,pppp,rrrrr	N	
RP	Watts	LF919QT	####	H	########	########	Y	9	(hhhh),rrrrr	N	
RP	Watts	LF919QT	####	VD	########	########	N	9	(vv),xx,ooo,pppp,rrrrr	N	
RP	Watts	LF919QT	####	VD	########	########	Y	9	(hhhh),rrrrr	N	
RP	Watts	LF919QT	####	H	########	########	N	9	(vv),xx,ooo,pppp,rrrrr	N	
RP	Watts	LF919QT	####	H	########	########	Y	9	(hhhh),rrrrr	N	
RP	Watts	LF919QT	####	VD	########	########	N	9	(vv),xx,ooo,pppp,rrrrr	N	
RP	Watts	LF919QT	####	VD	########	########	Y	9	(hhhh),rrrrr	N	
RP	Watts	LF919QT	#	H	########	########	N	9	(vv),xx,ooo,pppp,rrrrr	N	
RP	Watts	LF919QT	#	H	########	########	Y	9	(hhhh),rrrrr	N	
RP	Watts	LF919QT	#	VD	########	########	N	9	(vv),xx,ooo,pppp,rrrrr	N	
RP	Watts	LF919QT	#	VD	########	########	Y	9	(hhhh),rrrrr	N	
RP	Watts	LF919ZQT	3/4	VUVU	########	########	N	9	(vv),xx,ooo,hhhh,pppp,rrrrr	N	
RP	Watts	LF919ZQT	#	VUVU	########	########	N	9	(vv),xx,ooo,hhhh,pppp,rrrrr	N	
RP	Watts	LF919ZQT	####	VUVU	########	########	N	9	(vv),xx,ooo,hhhh,pppp,rrrrr	N	
RP	Watts	LF919ZQT	####	VUVU	########	########	N	9	(vv),xx,ooo,hhhh,pppp,rrrrr	N	
RP	Watts	LF919ZQT	#	VUVU	########	########	N	9	(vv),xx,ooo,hhhh,pppp,rrrrr	N	
RP	Watts	LFU919AQT	3/4	VUVU	########	########	N	9	(vv),xx,ooo,pppp	N	
RP	Watts	LFU919AQT	3/4	VUVU	########	########	Y	9	hhhh	N	
RP	Watts	LFU919AQT	#	VUVU	########	########	N	9	(vv),xx,ooo,pppp	N	
RP	Watts	LFU919AQT	#	VUVU	########	########	Y	9	hhhh	N	
RP	Watts	LFU919AQT	####	VUVU	########	########	N	9	(vv),xx,ooo,pppp	N	
RP	Watts	LFU919AQT	####	VUVU	########	########	Y	9	hhhh	N	
RP	Watts	LFU919AQT	####	VUVU	########	########	N	9	(vv),xx,ooo,pppp	N	
RP	Watts	LFU919AQT	####	VUVU	########	########	Y	9	hhhh	N	
RP	Watts	LFU919AQT	#	VUVU	########	########	N	9	(vv),xx,ooo,pppp	N	
RP	Watts	LFU919AQT	#	VUVU	########	########	Y	9	hhhh	N	
RP	Watts	LFU919QT	#	H	########	########	N	9	(vv),xx,ooo,pppp	N	
RP	Watts	LFU919QT	#	H	########	########	Y	9	hhhh	N	
RP	Watts	LFU919QT	#	VD	########	########	N	9	(vv),xx,ooo,pppp	N	
RP	Watts	LFU919QT	#	VD	########	########	Y	9	hhhh	N	
RP	Watts	LFU919QT	####	H	########	########	N	9	(vv),xx,ooo,pppp	N	
RP	Watts	LFU919QT	####	H	########	########	Y	9	hhhh	N	
RP	Watts	LFU919QT	####	VD	########	########	N	9	(vv),xx,ooo,pppp	N	
RP	Watts	LFU919QT	####	VD	########	########	Y	9	hhhh	N	
RP	Watts	LFU919QT	####	H	########	########	N	9	(vv),xx,ooo,pppp	N	
RP	Watts	LFU919QT	####	H	########	########	Y	9	hhhh	N	
RP	Watts	LFU919QT	####	VD	########	########	N	9	(vv),xx,ooo,pppp	N	
RP	Watts	LFU919QT	####	VD	########	########	Y	9	hhhh	N	
RP	Watts	LFU919QT	#	H	########	########	N	9	(vv),xx,ooo,pppp	N	
RP	Watts	LFU919QT	#	H	########	########	Y	9	hhhh	N	

Type	Manufacturer	Model	Size	Orientation(s)	Approved	Renewed	≤0.25% Pb	Manual	Shutoffs	Spare Parts	Bypass
RP	Watts	LFU919QT	#	VD	########	########	N	9	(vv),xx,ooo,pppp	N	
RP	Watts	LFU919QT	#	VD	########	########	Y	9	hhhh	N	
RP	Watts	SS009M3QT	1/4	H	########	########	Y	9	(hhh)	N	
RP	Watts	SS009M3QT	3/8	H	########	########	Y	9	(hhh)	N	
RP	Watts	SS009M3QT	1/2	H	########	########	Y	9	(hhh)	N	
RP	Watts	SS009M3QT	3/4	H	########	########	Y	9	(hhh)	N	
RP	Watts	SS009QT	#	H	########	########	N	Y	(hhh)	N	
RP	Watts	U009APCQT	3/4	VDVU	########	########	N	8	(vv),xx,ooo,hhhh,pppp	N	
RP	Watts	U009APCQT	3/4	VDVU	########	########	N	8	(vv),xx,ooo,hhhh,pppp	N	
RP	Watts	U009APCQT	3/4	VUVU	########	########	N	8	(vv),xx,ooo,hhhh,pppp	N	
RP	Watts	U009APCQT	3/4	VUVU	########	########	N	8	(vv),xx,ooo,hhhh,pppp	N	
RP	Watts	U009APCQT	#	VDVU	########	########	N	8	vv,xx,ooo,hhhh,pppp	Y	
RP	Watts	U009APCQT	#	VDVU	########	########	N	8	vv,xx,ooo,hhhh,pppp	Y	
RP	Watts	U009APCQT	#	VUVU	########	########	N	8	vv,xx,ooo,hhhh,pppp	Y	
RP	Watts	U009APCQT	#	VUVU	########	########	N	8	vv,xx,ooo,hhhh,pppp	Y	
RP	Watts	U009AQT	3/4	VDVU	########	########	N	8	(vv),xx,ooo,hhhh,pppp	N	
RP	Watts	U009AQT	3/4	VDVU	########	########	N	8	(vv),xx,ooo,hhhh,pppp	N	
RP	Watts	U009AQT	3/4	VUVU	########	########	N	8	(vv),xx,ooo,hhhh,pppp	N	
RP	Watts	U009AQT	3/4	VUVU	########	########	N	8	(vv),xx,ooo,hhhh,pppp	N	
RP	Watts	U009AQT	#	VDVU	########	########	N	8	vv,xx,ooo,hhhh,pppp	Y	
RP	Watts	U009AQT	#	VDVU	########	########	N	8	vv,xx,ooo,hhhh,pppp	Y	
RP	Watts	U009AQT	#	VUVU	########	########	N	8	vv,xx,ooo,hhhh,pppp	Y	
RP	Watts	U009AQT	#	VUVU	########	########	N	8	vv,xx,ooo,hhhh,pppp	Y	
RP	Watts	U009M1APCQT	####	VDVU	########	########	N	8	vv,xx,ooo,hhhh,pppp	Y	
RP	Watts	U009M1APCQT	####	VDVU	########	########	N	8	vv,xx,ooo,hhhh,pppp	Y	
RP	Watts	U009M1APCQT	####	VUVU	########	########	N	8	vv,xx,ooo,hhhh,pppp	Y	
RP	Watts	U009M1APCQT	####	VUVU	########	########	N	8	vv,xx,ooo,hhhh,pppp	Y	
RP	Watts	U009M1APCQT	#	VDVU	########	########	N	8	vv,xx,ooo,hhhh,pppp	Y	
RP	Watts	U009M1APCQT	#	VDVU	########	########	N	8	vv,xx,ooo,hhhh,pppp	Y	
RP	Watts	U009M1APCQT	#	VUVU	########	########	N	8	vv,xx,ooo,hhhh,pppp	Y	
RP	Watts	U009M1APCQT	#	VUVU	########	########	N	8	vv,xx,ooo,hhhh,pppp	Y	
RP	Watts	U009M1AQT	####	VDVU	########	########	N	8	vv,xx,ooo,hhhh,pppp	Y	
RP	Watts	U009M1AQT	####	VDVU	########	########	N	8	vv,xx,ooo,hhhh,pppp	Y	
RP	Watts	U009M1AQT	####	VUVU	########	########	N	8	vv,xx,ooo,hhhh,pppp	Y	
RP	Watts	U009M1AQT	####	VUVU	########	########	N	8	vv,xx,ooo,hhhh,pppp	Y	
RP	Watts	U009M1AQT	#	VDVU	########	########	N	8	vv,xx,ooo,hhhh,pppp	Y	
RP	Watts	U009M1AQT	#	VDVU	########	########	N	8	vv,xx,ooo,hhhh,pppp	Y	
RP	Watts	U009M1AQT	#	VUVU	########	########	N	8	vv,xx,ooo,hhhh,pppp	Y	
RP	Watts	U009M1AQT	#	VUVU	########	########	N	8	vv,xx,ooo,hhhh,pppp	Y	
RP	Watts	U009M1PCQT	####	H	########	########	N	8	(vv),xx,ooo,hhhh,pppp	N	
RP	Watts	U009M1PCQT	####	H	########	########	N	8	(vv),xx,ooo,hhhh,pppp	N	
RP	Watts	U009M1PCQT	#	H	########	########	N	8	(vv),xx,ooo,hhhh,pppp	N	
RP	Watts	U009M1QT	####	H	########	########	N	8	(vv),xx,ooo,hhhh,pppp	N	
RP	Watts	U009M1QT	####	H	########	########	N	8	vv,xx,ooo,hhhh,pppp	Y	
RP	Watts	U009M1QT	#	H	########	########	N	8	vv,xx,ooo,hhhh,pppp	Y	
RP	Watts	U009M2APCQT	#	VDVU	########	########	N	9	(vv),xx,ooo,hhhh,pppp	N	
RP	Watts	U009M2APCQT	#	VDVU	########	########	N	9	(vv),xx,ooo,hhhh,pppp	N	
RP	Watts	U009M2APCQT	#	VUVU	########	########	N	9	(vv),xx,ooo,hhhh,pppp	N	
RP	Watts	U009M2APCQT	#	VUVU	########	########	N	9	(vv),xx,ooo,hhhh,pppp	N	
RP	Watts	U009M2APCQT	####	VDVU	########	########	N	8	(vv),xx,ooo,hhhh,pppp	N	
RP	Watts	U009M2APCQT	####	VDVU	########	########	N	8	(vv),xx,ooo,hhhh,pppp	N	
RP	Watts	U009M2APCQT	####	VUVU	########	########	N	8	(vv),xx,ooo,hhhh,pppp	N	
RP	Watts	U009M2APCQT	####	VUVU	########	########	N	8	(vv),xx,ooo,hhhh,pppp	N	
RP	Watts	U009M2APCQT	#	VDVU	########	########	N	9	(vv),xx,ooo,hhhh,pppp	N	
RP	Watts	U009M2APCQT	#	VDVU	########	########	N	9	(vv),xx,ooo,hhhh,pppp	N	
RP	Watts	U009M2APCQT	#	VUVU	########	########	N	9	(vv),xx,ooo,hhhh,pppp	N	
RP	Watts	U009M2APCQT	#	VUVU	########	########	N	9	(vv),xx,ooo,hhhh,pppp	N	
RP	Watts	U009M2AQT	#	VDVU	########	########	N	9	(vv),xx,ooo,hhhh,pppp	N	
RP	Watts	U009M2AQT	#	VDVU	########	########	N	9	(vv),xx,ooo,hhhh,pppp	N	
RP	Watts	U009M2AQT	#	VUVU	########	########	N	9	(vv),xx,ooo,hhhh,pppp	N	
RP	Watts	U009M2AQT	#	VUVU	########	########	N	9	(vv),xx,ooo,hhhh,pppp	N	
RP	Watts	U009M2AQT	####	VDVU	########	########	N	8	(vv),xx,ooo,hhhh,pppp	N	
RP	Watts	U009M2AQT	####	VDVU	########	########	N	8	(vv),xx,ooo,hhhh,pppp	N	
RP	Watts	U009M2AQT	####	VUVU	########	########	N	8	(vv),xx,ooo,hhhh,pppp	N	
RP	Watts	U009M2AQT	####	VUVU	########	########	N	8	(vv),xx,ooo,hhhh,pppp	N	
RP	Watts	U009M2AQT	#	VDVU	########	########	N	9	(vv),xx,ooo,hhhh,pppp	N	
RP	Watts	U009M2AQT	#	VDVU	########	########	N	9	(vv),xx,ooo,hhhh,pppp	N	
RP	Watts	U009M2AQT	#	VUVU	########	########	N	9	(vv),xx,ooo,hhhh,pppp	N	
RP	Watts	U009M2AQT	#	VUVU	########	########	N	9	(vv),xx,ooo,hhhh,pppp	N	
RP	Watts	U009M2PCQT	#	H	########	########	N	9	(vv),xx,ooo,hhhh,pppp	N	
RP	Watts	U009M2PCQT	####	H	########	########	N	8	(vv),xx,ooo,hhhh,pppp	N	
RP	Watts	U009M2PCQT	#	H	########	########	N	9	(vv),xx,ooo,hhhh,pppp	N	
RP	Watts	U009M2QT	3/4	H	########	########	N	8	(vv),xx,ooo,hhhh,pppp	N	
RP	Watts	U009M2QT	#	H	########	########	N	9	(vv),xx,ooo,hhhh,pppp	N	
RP	Watts	U009M2QT	####	H	########	########	N	8	(vv),xx,ooo,hhhh,pppp	N	
RP	Watts	U009M2QT	#	H	########	########	N	9	(vv),xx,ooo,hhhh,pppp	N	
RP	Watts	U009PCQT	1/2	H	########	########	N	8	(vv),xx,ooo,hhhh,pppp	N	
RP	Watts	U009PCQT	3/4	H	########	########	N	8	(vv),xx,ooo,hhhh,pppp	N	
RP	Watts	U009PCQT	#	H	########	########	N	8	vv,xx,ooo,hhhh,pppp	Y	
RP	Watts	U009PCQT	####	H	########	########	N	8	vv,xx,ooo,hhhh,pppp	Y	
RP	Watts	U009PCQT	####	H	########	########	N	8	vv,xx,ooo,hhhh,pppp	Y	
RP	Watts	U009PCQT	#	H	########	########	N	8	vv,xx,ooo,hhhh,pppp	Y	
RP	Watts	U009QT	1/2	H	########	########	N	8	(vv),xx,ooo,hhhh,pppp	N	
RP	Watts	U009QT	3/4	H	########	########	N	7	vv,xx,ooo,hhhh,pppp	Y	
RP	Watts	U009QT	#	H	########	########	N	7	vv,xx,ooo,hhhh,pppp	Y	
RP	Watts	U009QT	####	H	########	########	N	7	vv,xx,ooo,hhhh,pppp	Y	
RP	Watts	U009QT	####	H	########	########	N	7	vv,xx,ooo,hhhh,pppp	Y	
RP	Watts	U009QT	#	H	########	########	N	7	vv,xx,ooo,hhhh,pppp	Y	
RP	Watts	U009SSPCQT	3/4	H	########	########	N	8	vv,xx,pppp	Y	
RP	Watts	U009SSPCQT	#	H	########	########	N	8	vv,xx,pppp	Y	
RP	Watts	U009SSPCQT	####	H	########	########	N	8	vv,xx,pppp	Y	
RP	Watts	U009SSPCQT	####	H	########	########	N	8	vv,xx,pppp	Y	
RP	Watts	U009SSPCQT	#	H	########	########	N	8	vv,xx,pppp	Y	
RP	Watts	U009SSQT	3/4	H	########	########	N	7	vv,xx,pppp	Y	
RP	Watts	U009SSQT	#	H	########	########	N	7	vv,xx,pppp	Y	
RP	Watts	U009SSQT	####	H	########	########	N	7	vv,xx,pppp	Y	
RP	Watts	U009SSQT	####	H	########	########	N	7	vv,xx,pppp	Y	
RP	Watts	U009SSQT	#	H	########	########	N	7	vv,xx,pppp	Y	
RP	Watts	U909HWQT	3/4	H	########	########	N	5	(vv),xx,ooo,hhhh,pppp	N	
RP	Watts	U909HWQT	#	H	########	########	N	5	(vv),xx,ooo,hhhh,pppp	N	
RP	Watts	U909QT	3/4	H	########	########	N	9	(vv),xx,ooo,hhhh,pppp	N	
RP	Watts	U909QT	3/4	VU	########	########	N	9	(vv),xx,ooo,hhhh,pppp	N	
RP	Watts	U909QT	#	H	########	########	N	9	(vv),xx,ooo,hhhh,pppp	N	
RP	Watts	U909QT	#	VU	########	########	N	9	(vv),xx,ooo,hhhh,pppp	N	
RP	Watts	U919AQT	3/4	VUVU	########	########	N	9	(vv),xx,ooo,hhhh,pppp	N	
RP	Watts	U919AQT	#	VUVU	########	########	N	9	(vv),xx,ooo,hhhh,pppp	N	
RP	Watts	U919AQT	####	VUVU	########	########	N	9	(vv),xx,ooo,hhhh,pppp	N	
RP	Watts	U919AQT	####	VUVU	########	########	N	9	(vv),xx,ooo,hhhh,pppp	N	
RP	Watts	U919AQT	#	VUVU	########	########	N	9	(vv),xx,ooo,hhhh,pppp	N	
RP	Watts	U919QT	#	H	########	########	N	9	(vv),xx,ooo,hhhh,pppp	N	
RP	Watts	U919QT	#	VD	########	########	N	9	(vv),xx,ooo,hhhh,pppp	N	
RP	Watts	U919QT	####	H	########	########	N	9	(vv),xx,ooo,hhhh,pppp	N	
RP	Watts	U919QT	####	VD	########	########	N	9	(vv),xx,ooo,hhhh,pppp	N	
RP	Watts	U919QT	####	H	########	########	N	9	(vv),xx,ooo,hhhh,pppp	N	
RP	Watts	U919QT	####	VD	########	########	N	9	(vv),xx,ooo,hhhh,pppp	N	
RP	Watts	U919QT	#	H	########	########	N	9	(vv),xx,ooo,hhhh,pppp	N	
RP	Watts	U919QT	#	VD	########	########	N	9	(vv),xx,ooo,hhhh,pppp	N	
RP	Wilkins	375	3/4	H	########	########	N	9	(int)	N	
RP	Wilkins	375	#	H	########	########	N	9	(int)	N	
RP	Wilkins	375	####	H	########	########	N	9	(int)	N	
RP	Wilkins	375	####	H	########	########	N	9	(int)	N	
RP	Wilkins	375	#	H	########	########	N	9	(int)	N	
RP	Wilkins	375	####	H	########	########	Y	9	(gg),hh,ppp,qqq,ssss,tttt,vvvv,wwww,yyyy,zzzz,kkkkk	N	
RP	Wilkins	375	####	H	########	########	N	9	(gg),ee,ff,hh,ll,mm,tt,uu,yy,zz,ppp,qqq,zzz,dddd,ssss,tttt,vvvv,wwww,yyyy,zzzz,kkkkk	N	
RP	Wilkins	375	#	H	########	########	Y	9	(gg),hh,ppp,qqq,ssss,tttt,vvvv,wwww,yyyy,zzzz,kkkkk	N	

Type	Manufacturer	Model	Size	Orientation(s)	Approved	Renewed	≤0.25% Pb	Manual	Shutoffs	Spare Parts	Bypass
RP	Wilkins	375	#	H	########	########	N	9	(gg),ee,ff,hh,ll,mm,tt,uu,yy,zz,ppp,qqq,zzz,dddd,ssss,tttt,vvvv,wwww,yyyy,zzzz,kkkkk	N	
RP	Wilkins	375	#	H	########	########	Y	9	(gg),hh,ppp,qqq,vvv,www,ssss,tttt,vvvv,wwww,yyyy,zzzz,kkkkk	N	
RP	Wilkins	375	#	H	########	########	N	9	(gg),ee,ff,hh,ll,mm,tt,uu,yy,zz,ppp,qqq,vvv,www,zzz,dddd,eeee,ssss,tttt,vvvv,wwww,yy	N	
RP	Wilkins	375	#	H	########	########	Y	9	(gg),hh,ppp,qqq,vvv,www,ssss,tttt,vvvv,wwww,yyyy,zzzz,kkkkk	N	
RP	Wilkins	375	#	H	########	########	N	9	(gg),ee,ff,hh,ll,mm,tt,uu,yy,zz,ppp,qqq,vvv,www,zzz,dddd,eeee,ssss,tttt,vvvv,wwww,yy	N	
RP	Wilkins	375	#	H	########	########	Y	9	(gg),hh,ppp,qqq,vvv,www,ssss,tttt,vvvv,wwww,yyyy,zzzz,kkkkk	N	
RP	Wilkins	375	#	H	########	########	N	9	(gg),ee,ff,hh,ll,mm,tt,uu,yy,zz,ppp,qqq,vvv,www,zzz,dddd,eeee,ssss,tttt,vvvv,wwww,yy	N	
RP	Wilkins	375	##	H	########	########	Y	9	(gg),hh,ppp,qqq,vvv,www,ssss,tttt,vvvv,wwww,yyyy,zzzz,kkkkk	N	
RP	Wilkins	375	##	H	########	########	N	9	(gg),ee,ff,hh,ll,mm,tt,uu,yy,zz,ppp,qqq,vvv,www,zzz,dddd,eeee,ssss,tttt,vvvv,wwww,yy	N	
RP	Wilkins	475	####	VUVU	########	########	Y	9	(gg),hh,ppp,qqq,ssss,uuuu,vvvv,xxxx,yyyy,aaaaa,kkkkk	N	
RP	Wilkins	475	####	VUVU	########	########	N	9	(gg),ee,ff,hh,ll,mm,tt,uu,yy,zz,ppp,qqq,zzz,dddd,ssss,uuuu,vvvv,xxxx,yyyy,aaaaa,kkkk	N	
RP	Wilkins	475	#	VUVU	########	########	Y	9	(gg),hh,ppp,qqq,ssss,uuuu,vvvv,xxxx,yyyy,aaaaa,kkkkk,lllll	N	
RP	Wilkins	475	#	VUVU	########	########	N	9	(gg),ee,ff,hh,ll,mm,tt,uu,yy,zz,ppp,qqq,zzz,dddd,ssss,uuuu,vvvv,xxxx,yyyy,aaaaa,kkkk	N	
RP	Wilkins	475	#	VUVU	########	########	Y	9	(ppp),qqq,sss,ttt,www,yyy,ssss,uuuu,vvvv,xxxx,yyyy,aaaaa,kkkkk,lllll	N	
RP	Wilkins	475	#	VUVU	########	########	N	9	(ppp),qqq,sss,ttt,www,yyy,zzz,dddd,eeee,ssss,uuuu,vvvv,xxxx,yyyy,aaaaa,kkkkk,lllll	N	
RP	Wilkins	475	#	VUVU	########	########	Y	9	(ppp),qqq,sss,ttt,www,yyy,ssss,uuuu,vvvv,xxxx,yyyy,aaaaa,kkkkk,lllll	N	
RP	Wilkins	475	#	VUVU	########	########	N	9	(ppp),qqq,sss,ttt,www,yyy,zzz,dddd,eeee,ssss,uuuu,vvvv,xxxx,yyyy,aaaaa,kkkkk,lllll	N	
RP	Wilkins	475	#	VUVU	########	########	Y	9	(ppp),qqq,sss,ttt,www,yyy,ssss,uuuu,vvvv,xxxx,yyyy,aaaaa,kkkkk,lllll	N	
RP	Wilkins	475	#	VUVU	########	########	N	9	(ppp),qqq,sss,ttt,www,yyy,zzz,dddd,eeee,ssss,uuuu,vvvv,xxxx,yyyy,aaaaa,kkkkk,lllll	N	
RP	Wilkins	475	##	VUVU	########	########	Y	9	(ppp),qqq,sss,ttt,www,ssss,uuuu,vvvv,xxxx,yyyy,aaaaa,kkkkk,lllll	N	
RP	Wilkins	475	##	VUVU	########	########	N	9	(ppp),qqq,sss,ttt,www,zzz,dddd,eeee,ssss,uuuu,vvvv,xxxx,yyyy,aaaaa,kkkkk,lllll	N	
RP	Wilkins	975	#	H	########	########	N	8	(gg),ee,ff,hh,tt,uu,yy,zz,ppp,ssss,tttt,vvvv,wwww,yyyy,zzzz	N	
RP	Wilkins	975	##	H	########	########	N	8	(gg),ee,ff,hh,tt,uu,yy,zz,ppp,ssss,tttt,vvvv,wwww,yyyy,zzzz	N	
RP	Wilkins	375	1/2	H	########	########	N	9	(int)	N	
RP	Wilkins	375A	####	H	########	########	Y	9	(ppp),qqq,sss,ttt,yyy,ssss,uuuu,vvvv,xxxx,yyyy,aaaaa,kkkkk,lllll	N	
RP	Wilkins	375A	####	H	########	########	N	9	(ppp),qqq,sss,ttt,yyy,zzz,dddd,ssss,uuuu,vvvv,xxxx,yyyy,aaaaa,kkkkk,lllll	N	
RP	Wilkins	375A	#	H	########	########	Y	9	(ppp),qqq,sss,ttt,yyy,ssss,uuuu,vvvv,xxxx,yyyy,aaaaa,kkkkk,lllll	N	
RP	Wilkins	375A	#	H	########	########	N	9	(ppp),qqq,sss,ttt,yyy,zzz,dddd,ssss,uuuu,vvvv,xxxx,yyyy,aaaaa,kkkkk,lllll	N	
RP	Wilkins	375A	#	H	########	########	N	9	(ppp),qqq,sss,ttt,www,yyy,zzz,dddd,eeee,ssss,uuuu,vvvv,xxxx,yyyy,aaaaa,kkkkk,lllll	N	
RP	Wilkins	375A	#	H	########	########	Y	9	(ppp),qqq,sss,ttt,www,yyy,zzz,ssss,uuuu,vvvv,xxxx,yyyy,aaaaa,kkkkk,lllll	N	
RP	Wilkins	375A	#	H	########	########	Y	9	(ppp),qqq,sss,ttt,www,yyy,zzz,ssss,uuuu,vvvv,xxxx,yyyy,aaaaa,kkkkk,lllll	N	
RP	Wilkins	375A	#	H	########	########	N	9	(ppp),qqq,sss,ttt,www,yyy,zzz,dddd,eeee,ssss,uuuu,vvvv,xxxx,yyyy,aaaaa,kkkkk,lllll	N	
RP	Wilkins	375A	#	H	########	########	Y	9	(ppp),qqq,sss,ttt,www,yyy,ssss,uuuu,vvvv,xxxx,yyyy,aaaaa,kkkkk,lllll	N	
RP	Wilkins	375A	##	H	########	########	Y	9	(ppp),qqq,sss,ttt,www,yyy,ssss,uuuu,vvvv,xxxx,yyyy,aaaaa,kkkkk,lllll	N	
RP	Wilkins	375A	##	H	########	########	N	9	(ppp),qqq,sss,ttt,www,yyy,zzz,dddd,eeee,ssss,uuuu,vvvv,xxxx,yyyy,aaaaa,kkkkk,lllll	N	
RP	Wilkins	375AMS	####	H	########		Y	9	(ppp),qqq,sss,ttt,www,yyy,zzz,ssss,uuuu,vvvv,xxxx,yyyy,aaaaa,kkkkk,lllll	N	
RP	Wilkins	375AMS	#	H	########		Y	9	(ppp),qqq,sss,ttt,www,yyy,zzz,ssss,uuuu,vvvv,xxxx,yyyy,aaaaa,kkkkk,lllll	N	
RP	Wilkins	375AMS	#	H	########		Y	9	(ppp),qqq,sss,ttt,www,yyy,zzz,ssss,uuuu,vvvv,xxxx,yyyy,aaaaa,kkkkk,lllll	N	
RP	Wilkins	375AMS	#	H	########		Y	9	(ppp),qqq,sss,ttt,www,yyy,zzz,ssss,uuuu,vvvv,xxxx,yyyy,aaaaa,kkkkk,lllll	N	
RP	Wilkins	375AMS	#	H	########		Y	9	(ppp),qqq,sss,ttt,www,yyy,ssss,uuuu,vvvv,xxxx,yyyy,aaaaa,kkkkk,lllll	N	
RP	Wilkins	375AMS	##	H	########		Y	9	(ppp),qqq,sss,ttt,www,yyy,zzz,ssss,uuuu,vvvv,xxxx,yyyy,aaaaa,kkkkk,lllll	N	
RP	Wilkins	375AR	####	H	########	########	N	9	(ppp),qqq,sss,ttt,yyy,zzz,dddd,ssss,uuuu,vvvv,xxxx,yyyy,aaaaa,kkkkk,lllll	N	
RP	Wilkins	375AR	####	H	########	########	Y	9	(ppp),qqq,sss,ttt,yyy,ssss,uuuu,vvvv,xxxx,yyyy,aaaaa,kkkkk,lllll	N	
RP	Wilkins	375AR	#	H	########	########	N	9	(ppp),qqq,sss,ttt,yyy,zzz,dddd,ssss,uuuu,vvvv,xxxx,yyyy,aaaaa,kkkkk,lllll	N	
RP	Wilkins	375AR	#	H	########	########	Y	9	(ppp),qqq,sss,ttt,yyy,ssss,uuuu,vvvv,xxxx,yyyy,aaaaa,kkkkk,lllll	N	
RP	Wilkins	375AR	#	H	########	########	Y	9	(ppp),qqq,sss,ttt,www,yyy,zzz,dddd,eeee,ssss,uuuu,vvvv,xxxx,yyyy,aaaaa,kkkkk,lllll	N	
RP	Wilkins	375AR	#	H	########	########	N	9	(ppp),qqq,sss,ttt,www,yyy,zzz,dddd,eeee,ssss,uuuu,vvvv,xxxx,yyyy,aaaaa,kkkkk,lllll	N	
RP	Wilkins	375AR	#	H	########	########	Y	9	(ppp),qqq,sss,ttt,www,yyy,zzz,dddd,eeee,ssss,uuuu,vvvv,xxxx,yyyy,aaaaa,kkkkk,lllll	N	
RP	Wilkins	375AR	#	H	########	########	N	9	(ppp),qqq,sss,ttt,www,yyy,zzz,dddd,eeee,ssss,uuuu,vvvv,xxxx,yyyy,aaaaa,kkkkk,lllll	N	
RP	Wilkins	375AR	#	H	########	########	Y	9	(ppp),qqq,sss,ttt,www,yyy,zzz,dddd,eeee,ssss,uuuu,vvvv,xxxx,yyyy,aaaaa,kkkkk,lllll	N	
RP	Wilkins	375AR	##	H	########	########	N	9	(ppp),qqq,sss,ttt,www,yyy,zzz,dddd,eeee,ssss,uuuu,vvvv,xxxx,yyyy,aaaaa,kkkkk,lllll	N	
RP	Wilkins	375AR	##	H	########	########	N	9	(ppp),qqq,sss,ttt,www,yyy,zzz,dddd,eeee,ssss,uuuu,vvvv,xxxx,yyyy,aaaaa,kkkkk,lllll	N	
RP	Wilkins	375ARMS	####	H	########		Y	9	(ppp),qqq,sss,ttt,yyy,ssss,uuuu,vvvv,xxxx,yyyy,aaaaa,kkkkk,lllll	N	
RP	Wilkins	375ARMS	#	H	########		Y	9	(ppp),qqq,sss,ttt,yyy,ssss,uuuu,vvvv,xxxx,yyyy,aaaaa,kkkkk,lllll	N	
RP	Wilkins	375ARMS	#	H	########		Y	9	(ppp),qqq,sss,ttt,www,yyy,zzz,dddd,eeee,ssss,uuuu,vvvv,xxxx,yyyy,aaaaa,kkkkk,lllll	N	
RP	Wilkins	375ARMS	#	H	########		Y	9	(ppp),qqq,sss,ttt,www,yyy,zzz,dddd,eeee,ssss,uuuu,vvvv,xxxx,yyyy,aaaaa,kkkkk,lllll	N	
RP	Wilkins	375ARMS	#	H	########		Y	9	(ppp),qqq,sss,ttt,www,yyy,zzz,dddd,eeee,ssss,uuuu,vvvv,xxxx,yyyy,aaaaa,kkkkk,lllll	N	
RP	Wilkins	375ARMS	##	H	########		Y	9	(ppp),qqq,sss,ttt,www,yyy,zzz,dddd,eeee,ssss,uuuu,vvvv,xxxx,yyyy,aaaaa,kkkkk,lllll	N	
RP	Wilkins	375ARXL	####	H	########	########	Y	9	(ppp),sss,ttt,qqq,yyy,zzz,dddd	N	
RP	Wilkins	375ARXL	#	H	########	########	Y	9	(ppp),sss,ttt,qqq,yyy,zzz,dddd	N	
RP	Wilkins	375ARXL	#	H	########	########	Y	9	(ppp),qqq,sss,ttt,www,yyy,zzz,dddd,eeee,ssss,uuuu,vvvv,xxxx,yyyy,aaaaa	N	
RP	Wilkins	375ARXL	#	H	########	########	Y	9	(ppp),qqq,sss,ttt,www,yyy,zzz,dddd,eeee,ssss,uuuu,vvvv,xxxx,yyyy,aaaaa	N	
RP	Wilkins	375ARXL	#	H	########	########	Y	9	(ppp),qqq,sss,ttt,www,yyy,zzz,dddd,eeee,ssss,uuuu,vvvv,xxxx,yyyy,aaaaa	N	
RP	Wilkins	375ARXL	##	H	########	########	Y	9	(ppp),qqq,sss,ttt,www,yyy,zzz,dddd,eeee,ssss,uuuu,vvvv,xxxx,yyyy,aaaaa	N	
RP	Wilkins	375AST	####	H	########		Y	10	(yyy),ssss,uuuu,vvvv,xxxx,yyyy,aaaaa,kkkkk,lllll	N	
RP	Wilkins	375AST	#	H	########		Y	10	(yyy),ssss,uuuu,vvvv,xxxx,yyyy,aaaaa,kkkkk,lllll	N	
RP	Wilkins	375AST	#	H	########	########	Y	10	(yyy),ssss,uuuu,vvvv,xxxx,yyyy,aaaaa,kkkkk,lllll	N	
RP	Wilkins	375AST	#	H	########		Y	10	(yyy),ssss,uuuu,vvvv,xxxx,yyyy,aaaaa,kkkkk,lllll	N	
RP	Wilkins	375AST	#	H	########		Y	10	(yyy),ssss,uuuu,vvvv,xxxx,yyyy,aaaaa,kkkkk,lllll	N	
RP	Wilkins	375AST	##	H	########		Y	10	(yyy),ssss,uuuu,vvvv,xxxx,yyyy,aaaaa,kkkkk,lllll	N	
RP	Wilkins	375ASTMS	####	H	########		Y	10	(yyy),ssss,uuuu,vvvv,xxxx,yyyy,aaaaa,kkkkk,lllll	N	
RP	Wilkins	375ASTMS	#	H	########		Y	10	(yyy),ssss,uuuu,vvvv,xxxx,yyyy,aaaaa,kkkkk,lllll	N	
RP	Wilkins	375ASTMS	#	H	########		Y	10	(yyy),ssss,uuuu,vvvv,xxxx,yyyy,aaaaa,kkkkk,lllll	N	
RP	Wilkins	375ASTMS	#	H	########		Y	10	(yyy),ssss,uuuu,vvvv,xxxx,yyyy,aaaaa,kkkkk,lllll	N	
RP	Wilkins	375ASTMS	#	H	########		Y	10	(yyy),ssss,uuuu,vvvv,xxxx,yyyy,aaaaa,kkkkk,lllll	N	
RP	Wilkins	375ASTMS	##	H	########		Y	10	(yyy),ssss,uuuu,vvvv,xxxx,yyyy,aaaaa,kkkkk,lllll	N	
RP	Wilkins	375ASTR	####	H	########		Y	10	(yyy),ssss,uuuu,vvvv,xxxx,yyyy,aaaaa,kkkkk,lllll	N	
RP	Wilkins	375ASTR	#	H	########		Y	10	(yyy),ssss,uuuu,vvvv,xxxx,yyyy,aaaaa,kkkkk,lllll	N	
RP	Wilkins	375ASTR	#	H	########	########	Y	10	(yyy),ssss,uuuu,vvvv,xxxx,yyyy,aaaaa,kkkkk,lllll	N	
RP	Wilkins	375ASTR	#	H	########		Y	10	(yyy),ssss,uuuu,vvvv,xxxx,yyyy,aaaaa,kkkkk,lllll	N	
RP	Wilkins	375ASTR	#	H	########		Y	10	(yyy),ssss,uuuu,vvvv,xxxx,yyyy,aaaaa,kkkkk,lllll	N	
RP	Wilkins	375ASTR	##	H	########		Y	10	(yyy),ssss,uuuu,vvvv,xxxx,yyyy,aaaaa,kkkkk,lllll	N	
RP	Wilkins	375ASTRMS	####	H	########		Y	10	(yyy),ssss,uuuu,vvvv,xxxx,yyyy,aaaaa,kkkkk,lllll	N	
RP	Wilkins	375ASTRMS	#	H	########		Y	10	(yyy),ssss,uuuu,vvvv,xxxx,yyyy,aaaaa,kkkkk,lllll	N	
RP	Wilkins	375ASTRMS	#	H	########		Y	10	(yyy),ssss,uuuu,vvvv,xxxx,yyyy,aaaaa,kkkkk,lllll	N	
RP	Wilkins	375ASTRMS	#	H	########		Y	10	(yyy),ssss,uuuu,vvvv,xxxx,yyyy,aaaaa,kkkkk,lllll	N	
RP	Wilkins	375ASTRMS	#	H	########		Y	10	(yyy),ssss,uuuu,vvvv,xxxx,yyyy,aaaaa,kkkkk,lllll	N	
RP	Wilkins	375ASTRMS	##	H	########		Y	10	(yyy),ssss,uuuu,vvvv,xxxx,yyyy,aaaaa,kkkkk,lllll	N	
RP	Wilkins	375AXL	####	H	########	########	N	9	dddd	N	
RP	Wilkins	375AXL	####	H	########	########	Y	9	(ppp),qqq,sss,ttt,yyy,zzz	N	
RP	Wilkins	375AXL	#	H	########	########	N	9	dddd	N	
RP	Wilkins	375AXL	#	H	########	########	Y	9	(ppp),qqq,sss,ttt,yyy,zzz	N	
RP	Wilkins	375AXL	#	H	########	########	N	9	dddd,eeee	N	
RP	Wilkins	375AXL	#	H	########	########	Y	9	(ppp),qqq,sss,ttt,www,yyy,zzz,ssss,uuuu,vvvv,xxxx,yyyy,aaaaa	N	
RP	Wilkins	375AXL	#	H	########	########	N	9	dddd,eeee	N	
RP	Wilkins	375AXL	#	H	########	########	Y	9	(ppp),qqq,sss,ttt,www,yyy,zzz,ssss,uuuu,vvvv,xxxx,yyyy,aaaaa	N	
RP	Wilkins	375AXL	#	H	########	########	N	9	zzz,dddd,eeee	N	
RP	Wilkins	375AXL	#	H	########	########	Y	9	(ppp),qqq,sss,ttt,www,yyy,ssss,uuuu,vvvv,xxxx,yyyy,aaaaa	N	
RP	Wilkins	375AXL	##	H	########	########	N	9	zzz,dddd,eeee	N	
RP	Wilkins	375AXL	##	H	########	########	Y	9	(ppp),qqq,sss,ttt,www,yyy,ssss,uuuu,vvvv,xxxx,yyyy,aaaaa	N	
RP	Wilkins	375B	1/2	H	########	########	N	9	(int)	N	
RP	Wilkins	375B	3/4	H	########	########	N	9	(int)	N	
RP	Wilkins	375B	#	H	########	########	N	9	(int)	N	
RP	Wilkins	375B	####	H	########	########	N	9	(int)	N	
RP	Wilkins	375B	####	H	########	########	N	9	(int)	N	
RP	Wilkins	375B	#	H	########	########	N	9	(int)	N	
RP	Wilkins	375MS	####	H	########	########	Y	9	(gg),hh,ppp,qqq,ssss,tttt,vvvv,wwww,yyyy,zzzz,kkkkk	N	
RP	Wilkins	375MS	####	H	########	########	N	9	(gg),ee,ff,hh,ll,mm,tt,uu,yy,zz,ppp,qqq,zzz,dddd,ssss,tttt,vvvv,wwww,yyyy,zzzz,kkkkk	N	
RP	Wilkins	375MS	#	H	########	########	Y	9	(gg),hh,ppp,qqq,ssss,tttt,vvvv,wwww,yyyy,zzzz,kkkkk	N	
RP	Wilkins	375MS	#	H	########	########	N	9	(gg),ee,ff,hh,ll,mm,tt,uu,yy,zz,ppp,qqq,zzz,dddd,ssss,tttt,vvvv,wwww,yyyy,zzzz,kkkkk	N	
RP	Wilkins	375MS	#	H	########	########	Y	9	(gg),hh,ppp,qqq,vvv,www,,ssss,tttt,vvvv,wwww,yyyy,zzzz,kkkkk	N	
RP	Wilkins	375MS	#	H	########	########	N	9	(gg),ee,ff,hh,ll,mm,tt,uu,yy,zz,ppp,qqq,vvv,www,zzz,dddd,eeee,ssss,tttt,vvvv,wwww,yy	N	
RP	Wilkins	375MS	#	H	########	########	Y	9	(gg),hh,ppp,qqq,vvv,www,zzz,ssss,tttt,vvvv,wwww,yyyy,zzzz,kkkkk	N	
RP	Wilkins	375MS	#	H	########	########	N	9	(gg),ee,ff,hh,ll,mm,tt,uu,yy,zz,ppp,qqq,vvv,www,zzz,dddd,eeee,ssss,tttt,vvvv,wwww,yy	N	
RP	Wilkins	375MS	#	H	########	########	Y	9	(gg),hh,ppp,qqq,vvv,www,ssss,tttt,vvvv,wwww,yyyy,zzzz,kkkkk	N	
RP	Wilkins	375MS	##	H	########	########	Y	9	(gg),hh,ppp,qqq,vvv,www,ssss,tttt,vvvv,wwww,yyyy,zzzz,kkkkk	N	
RP	Wilkins	375MS	##	H	########	########	N	9	(gg),ee,ff,hh,ll,mm,tt,uu,yy,zz,ppp,qqq,vvv,www,zzz,dddd,eeee,ssss,tttt,vvvv,wwww,yy	N	
RP	Wilkins	375ST	1/2	H	########	########	Y	9	(int)	N	
RP	Wilkins	375ST	3/4	H	########	########	Y	9	(int)	N	
RP	Wilkins	375ST	#	H	########	########	Y	9	int	N	
RP	Wilkins	375XL	1/2	H	########	########	Y	9	(int)	N	
RP	Wilkins	375XL	3/4	H	########	########	Y	9	(int)	N	

Type	Manufacturer	Model	Size	Orientation(s)	Approved	Renewed	≤0.25% Pb	Manual	Shutoffs	Spare Parts	Bypass
RP	Wilkins	375XL	#	H	########	########	Y	9	(int)	N	
RP	Wilkins	375XL	####	H	########	########	Y	9	(int)	N	
RP	Wilkins	375XL	####	H	########	########	Y	9	(int)	N	
RP	Wilkins	375XL	#	H	########	########	Y	9	(int)	N	
RP	Wilkins	375XL	####	H	########	########	N	9	ee,ff,ll,mm,tt,uu,yy,zz,zzz,dddd	N	
RP	Wilkins	375XL	####	H	########	########	Y	9	(gg),hh,ppp,qqq,ssss,tttt,vvvv,wwww,yyyy,zzzz	N	
RP	Wilkins	375XL	#	H	########	########	N	9	ee,ff,ll,mm,tt,uu,yy,zz,zzz,dddd	N	
RP	Wilkins	375XL	#	H	########	########	Y	9	(gg),hh,ppp,qqq,ssss,tttt,vvvv,wwww,yyyy,zzzz	N	
RP	Wilkins	375XL	#	H	########	########	N	9	ee,ff,ll,mm,tt,uu,yy,zz,zzz,dddd,eeee	N	
RP	Wilkins	375XL	#	H	########	########	Y	9	(gg),hh,ppp,qqq,vvv,www,ssss,tttt,vvvv,wwww,yyyy,zzzz	N	
RP	Wilkins	375XL	#	H	########	########	Y	9	(gg),hh,ppp,qqq,vvv,www,ssss,tttt,vvvv,wwww,yyyy,zzzz	N	
RP	Wilkins	375XL	#	H	########	########	N	9	ee,ff,ll,mm,tt,uu,yy,zz,zzz,dddd,eeee	N	
RP	Wilkins	375XL	##	H	########	########	N	9	ee,ff,ll,mm,tt,uu,yy,zz,zzz,dddd,eeee	N	
RP	Wilkins	375XL	##	H	########	########	Y	9	gg,hh,ppp,qqq,vvv,www,ssss,tttt,vvvv,wwww,yyyy,zzzz	N	
RP	Wilkins	375XLB	1/2	H	########	########	Y	9	(int)	N	
RP	Wilkins	375XLB	3/4	H	########	########	Y	9	(int)	N	
RP	Wilkins	375XLB	#	H	########	########	Y	9	(int)	N	
RP	Wilkins	375XLB	####	H	########	########	Y	9	(int)	N	
RP	Wilkins	375XLB	####	H	########	########	Y	9	(int)	N	
RP	Wilkins	375XLB	#	H	########	########	Y	9	(int)	N	
RP	Wilkins	375XLMS	####	H	########	########	N	9	ee,ff,ll,mm,tt,uu,yy,zz,zzz,dddd	N	
RP	Wilkins	375XLMS	####	H	########	########	Y	9	(gg),hh,ppp,qqq,ssss,tttt,vvvv,wwww,yyyy,zzzz	N	
RP	Wilkins	375XLMS	#	H	########	########	N	9	ee,ff,ll,mm,tt,uu,yy,zz,zzz,dddd	N	
RP	Wilkins	375XLMS	#	H	########	########	Y	9	(gg),hh,ppp,qqq,ssss,tttt,vvvv,wwww,yyyy,zzzz	N	
RP	Wilkins	375XLMS	#	H	########	########	N	9	ee,ff,ll,mm,tt,uu,yy,zzzzz,dddd,eeee	N	
RP	Wilkins	375XLMS	#	H	########	########	Y	9	(gg),hh,ppp,qqq,vvv,www,,ssss,tttt,vvvv,wwww,yyyy,zzzz	N	
RP	Wilkins	375XLMS	#	H	########	########	N	9	ee,ff,ll,mm,tt,uu,yy,zz,dddd,eeee	N	
RP	Wilkins	375XLMS	#	H	########	########	Y	9	(gg),hh,ppp,qqq,vvv,www,zzz,ssss,tttt,vvvv,wwww,yyyy,zzzz	N	
RP	Wilkins	375XLMS	#	H	########	########	N	9	ee,ff,ll,mm,tt,uu,yy,zz,zzz,dddd,eeee	N	
RP	Wilkins	375XLMS	#	H	########	########	Y	9	gg,hh,ppp,qqq,vvv,www,ssss,tttt,vvvv,wwww,yyyy,zzzz	N	
RP	Wilkins	375XLMS	##	H	########	########	N	9	ee,ff,ll,mm,tt,uu,yy,zz,zzz,dddd,eeee	N	
RP	Wilkins	375XLMS	##	H	########	########	Y	9	gg,hh,ppp,qqq,vvv,www,ssss,tttt,vvvv,wwww,yyyy,zzzz	N	
RP	Wilkins	475MS	####	VUVU	########	########	Y	9	(gg),hh,ppp,qqq,ssss,uuuu,vvvv,xxxx,yyyy,aaaaa,kkkkk	N	
RP	Wilkins	475MS	####	VUVU	########	########	N	9	(gg),ee,ff,hh,ll,mm,tt,uu,yy,zz,ppp,qqq,zzz,dddd,ssss,uuuu,vvvv,xxxx,yyyy,aaaaa,kkkk	N	
RP	Wilkins	475MS	#	VUVU	########	########	Y	9	(gg),hh,ppp,qqq,ssss,uuuu,vvvv,xxxx,yyyy,aaaaa,kkkkk,llllll	N	
RP	Wilkins	475MS	#	VUVU	########	########	N	9	(gg),ee,ff,hh,ll,mm,tt,uu,yy,zz,ppp,qqq,zzz,dddd,ssss,uuuu,vvvv,xxxx,yyyy,aaaaa,kkkk	N	
RP	Wilkins	475MS	#	VUVU	########	########	Y	9	(ppp),qqq,sss,ttt,www,yyy,ssss,uuuu,vvvv,xxxx,yyyy,aaaaa,kkkkk,llllll	N	
RP	Wilkins	475MS	#	VUVU	########	########	N	9	(ppp),qqq,sss,ttt,www,yyy,zzz,dddd,eeee,ssss,uuuu,vvvv,xxxx,yyyy,aaaaa,kkkkk,llllll	N	
RP	Wilkins	475MS	#	VUVU	########	########	Y	9	(ppp),qqq,sss,ttt,www,yyy,ssss,uuuu,vvvv,xxxx,yyyy,aaaaa,kkkkk,llllll	N	
RP	Wilkins	475MS	#	VUVU	########	########	N	9	(ppp),qqq,sss,ttt,www,yyy,zzz,dddd,eeee,ssss,uuuu,vvvv,xxxx,yyyy,aaaaa,kkkkk,llllll	N	
RP	Wilkins	475MS	#	VUVU	########	########	Y	9	(ppp),qqq,sss,ttt,www,yyy,ssss,uuuu,vvvv,xxxx,yyyy,aaaaa,kkkkk,llllll	N	
RP	Wilkins	475MS	#	VUVU	########	########	N	9	(ppp),qqq,sss,ttt,www,yyy,zzz,dddd,eeee,ssss,uuuu,vvvv,xxxx,yyyy,aaaaa,kkkkk,llllll	N	
RP	Wilkins	475MS	##	H	########	########	Y	9	(ppp),qqq,sss,ttt,www,ssss,uuuu,vvvv,xxxx,yyyy,aaaaa,kkkkk,llllll	N	
RP	Wilkins	475MS	##	H	########	########	N	9	(ppp),qqq,sss,ttt,www,zzz,dddd,eeee,ssss,uuuu,vvvv,xxxx,yyyy,aaaaa,kkkkk,llllll	N	
RP	Wilkins	475V	####	VUVU	########	########	Y	9	(gg),hh,ppp,qqq,ssss,uuuu,vvvv,xxxx,yyyy,aaaaa,kkkkk	N	
RP	Wilkins	475V	####	VUVU	########	########	N	9	(gg),ee,ff,hh,ll,mm,tt,uu,yy,zz,ppp,qqq,zzz,dddd,ssss,uuuu,vvvv,xxxx,yyyy,aaaaa,kkkk	N	
RP	Wilkins	475V	#	VUVU	########	########	Y	9	(gg),hh,ppp,qqq,ssss,uuuu,vvvv,xxxx,yyyy,aaaaa,kkkkk,llllll	N	
RP	Wilkins	475V	#	VUVU	########	########	N	9	(gg),ee,ff,hh,ll,mm,tt,uu,yy,zz,ppp,qqq,zzz,dddd,ssss,uuuu,vvvv,xxxx,yyyy,aaaaa,kkkk	N	
RP	Wilkins	475V	#	VUVU	########	########	Y	9	(ppp),qqq,sss,ttt,www,yyy,ssss,uuuu,vvvv,xxxx,yyyy,aaaaa,kkkkk,llllll	N	
RP	Wilkins	475V	#	VUVU	########	########	N	9	(ppp),qqq,sss,ttt,www,yyy,zzz,dddd,eeee,ssss,uuuu,vvvv,xxxx,yyyy,aaaaa,kkkkk,llllll	N	
RP	Wilkins	475V	#	VUVU	########	########	Y	9	(ppp),qqq,sss,ttt,www,yyy,ssss,uuuu,vvvv,xxxx,yyyy,aaaaa,kkkkk,llllll	N	
RP	Wilkins	475V	#	VUVU	########	########	N	9	(ppp),qqq,sss,ttt,www,yyy,zzz,dddd,eeee,ssss,uuuu,vvvv,xxxx,yyyy,aaaaa,kkkkk,llllll	N	
RP	Wilkins	475V	#	VUVU	########	########	Y	9	(ppp),qqq,sss,ttt,www,yyy,ssss,uuuu,vvvv,xxxx,yyyy,aaaaa,kkkkk,llllll	N	
RP	Wilkins	475V	##	VUVU	########	########	Y	9	(ppp),qqq,sss,ttt,www,ssss,uuuu,vvvv,xxxx,yyyy,aaaaa,kkkkk,llllll	N	
RP	Wilkins	475V	##	VUVU	########	########	N	9	(ppp),qqq,sss,ttt,www,zzz,dddd,eeee,ssss,uuuu,vvvv,xxxx,yyyy,aaaaa,kkkkk,llllll	N	
RP	Wilkins	475VMS	####	VUVU	########	########	Y	9	(gg),hh,ppp,qqq,ssss,uuuu,vvvv,xxxx,yyyy,aaaaa,kkkkk	N	
RP	Wilkins	475VMS	####	VUVU	########	########	N	9	(gg),ee,ff,hh,ll,mm,tt,uu,yy,zz,ppp,qqq,zzz,dddd,ssss,uuuu,vvvv,xxxx,yyyy,aaaaa,kkkk	N	
RP	Wilkins	475VMS	#	VUVU	########	########	Y	9	(gg),hh,ppp,qqq,ssss,uuuu,vvvv,xxxx,yyyy,aaaaa,kkkkk,llllll	N	
RP	Wilkins	475VMS	#	VUVU	########	########	N	9	(gg),ee,ff,hh,ll,mm,tt,uu,yy,zz,ppp,qqq,zzz,dddd,ssss,uuuu,vvvv,xxxx,yyyy,aaaaa,kkkk	N	
RP	Wilkins	475VMS	#	VUVU	########	########	Y	9	(ppp),qqq,sss,ttt,www,yyy,ssss,uuuu,vvvv,xxxx,yyyy,aaaaa,kkkkk,llllll	N	
RP	Wilkins	475VMS	#	VUVU	########	########	N	9	(ppp),qqq,sss,ttt,www,yyy,zzz,dddd,eeee,ssss,uuuu,vvvv,xxxx,yyyy,aaaaa,kkkkk,llllll	N	
RP	Wilkins	475VMS	#	VUVU	########	########	Y	9	(ppp),qqq,sss,ttt,www,yyy,ssss,uuuu,vvvv,xxxx,yyyy,aaaaa,kkkkk,llllll	N	
RP	Wilkins	475VMS	#	VUVU	########	########	N	9	(ppp),qqq,sss,ttt,www,yyy,zzz,dddd,eeee,ssss,uuuu,vvvv,xxxx,yyyy,aaaaa,kkkkk,llllll	N	
RP	Wilkins	475VMS	##	H	########	########	Y	9	(ppp),qqq,sss,ttt,www,ssss,uuuu,vvvv,xxxx,yyyy,aaaaa,kkkkk,llllll	N	
RP	Wilkins	475VMS	##	H	########	########	N	9	(ppp),qqq,sss,ttt,www,zzz,dddd,eeee,ssss,uuuu,vvvv,xxxx,yyyy,aaaaa,kkkkk,llllll	N	
RP	Wilkins	475XL	####	VUVU	########	########	N	9	ee,ff,ll,mm,tt,uu,yy,zz,zzz,dddd	N	
RP	Wilkins	475XL	####	VUVU	########	########	Y	9	(gg),hh,ppp,qqq,ssss,uuuu,vvvv,xxxx,yyyy,aaaaa	N	
RP	Wilkins	475XL	#	VUVU	########	########	N	9	ee,ff,ll,mm,tt,uu,yy,zz,zzz,dddd	N	
RP	Wilkins	475XL	#	VUVU	########	########	Y	9	(gg),hh,ppp,qqq,ssss,uuuu,vvvv,xxxx,yyyy,aaaaa	N	
RP	Wilkins	475XL	#	VUVU	########	########	N	9	zzz,dddd,eeee	N	
RP	Wilkins	475XL	#	VUVU	########	########	Y	9	(ppp),qqq,sss,ttt,www,yyy,ssss,uuuu,vvvv,xxxx,yyyy,aaaaa	N	
RP	Wilkins	475XL	#	VUVU	########	########	N	9	zzz,dddd,eeee	N	
RP	Wilkins	475XL	#	VUVU	########	########	Y	9	(ppp),qqq,sss,ttt,www,yyy,ssss,uuuu,vvvv,xxxx,yyyy,aaaaa	N	
RP	Wilkins	475XL	#	VUVU	########	########	N	9	zzz,dddd,eeee	N	
RP	Wilkins	475XL	#	VUVU	########	########	Y	9	ppp,qqq,sss,ttt,www,yyy,ssss,uuuu,vvvv,xxxx,yyyy,aaaaa	N	
RP	Wilkins	475XL	##	VUVU	########	########	N	9	zzz,dddd,eeee	N	
RP	Wilkins	475XL	##	VUVU	########	########	Y	9	ppp,qqq,sss,ttt,www,ssss,uuuu,vvvv,xxxx,yyyy,aaaaa	N	
RP	Wilkins	475XLMS	####	VUVU	########	########	N	9	ee,ff,ll,mm,tt,uu,yy,zz,zzz,dddd	N	
RP	Wilkins	475XLMS	####	VUVU	########	########	Y	9	(gg),hh,ppp,qqq,ssss,uuuu,vvvv,xxxx,yyyy,aaaaa	N	
RP	Wilkins	475XLMS	#	VUVU	########	########	N	9	ee,ff,ll,mm,tt,uu,yy,zz,zzz,dddd	N	
RP	Wilkins	475XLMS	#	VUVU	########	########	Y	9	(gg),hh,ppp,qqq,ssss,uuuu,vvvv,xxxx,yyyy,aaaaa	N	
RP	Wilkins	475XLMS	#	VUVU	########	########	N	9	zzz,dddd,eeee	N	
RP	Wilkins	475XLMS	#	VUVU	########	########	Y	9	(ppp),qqq,sss,ttt,www,yyy,ssss,uuuu,vvvv,xxxx,yyyy,aaaaa	N	
RP	Wilkins	475XLMS	#	VUVU	########	########	N	9	(gg),hh,ppp,qqq,ssss,uuuu,vvvv,xxxx,yyyy,aaaaa	N	
RP	Wilkins	475XLMS	#	VUVU	########	########	Y	9	(ppp),qqq,sss,ttt,www,yyy,ssss,uuuu,vvvv,xxxx,yyyy,aaaaa	N	
RP	Wilkins	475XLMS	#	VUVU	########	########	N	9	zzz,dddd,eeee	N	
RP	Wilkins	475XLMS	#	VUVU	########	########	Y	9	ppp,qqq,sss,ttt,www,yyy,ssss,uuuu,vvvv,xxxx,yyyy,aaaaa	N	
RP	Wilkins	475XLMS	##	H	########	########	N	9	zzz,dddd,eeee	N	
RP	Wilkins	475XLMS	##	H	########	########	Y	9	ppp,qqq,sss,ttt,www,ssss,uuuu,vvvv,xxxx,yyyy,aaaaa	N	
RP	Wilkins	475XLV	####	VUVU	########	########	N	9	ee,ff,ll,mm,tt,uu,yy,zz,zzz,dddd	N	
RP	Wilkins	475XLV	####	VUVU	########	########	Y	9	(gg),hh,ppp,qqq,ssss,uuuu,vvvv,xxxx,yyyy,aaaaa	N	
RP	Wilkins	475XLV	#	VUVU	########	########	N	9	ee,ff,ll,mm,tt,uu,yy,zz,zzz,dddd	N	
RP	Wilkins	475XLV	#	VUVU	########	########	Y	9	(gg),hh,ppp,qqq,ssss,uuuu,vvvv,xxxx,yyyy,aaaaa	N	
RP	Wilkins	475XLV	#	VUVU	########	########	N	9	zzz,dddd,eeee	N	
RP	Wilkins	475XLV	#	VUVU	########	########	Y	9	(ppp),qqq,sss,ttt,www,yyy,ssss,uuuu,vvvv,xxxx,yyyy,aaaaa	N	
RP	Wilkins	475XLV	#	VUVU	########	########	N	9	zzz,dddd,eeee	N	
RP	Wilkins	475XLV	#	VUVU	########	########	Y	9	(ppp),qqq,sss,ttt,www,yyy,ssss,uuuu,vvvv,xxxx,yyyy,aaaaa	N	
RP	Wilkins	475XLV	#	VUVU	########	########	N	9	zzz,dddd,eeee	N	
RP	Wilkins	475XLV	#	VUVU	########	########	Y	9	ppp,qqq,sss,ttt,www,yyy,ssss,uuuu,vvvv,xxxx,yyyy,aaaaa	N	
RP	Wilkins	475XLV	##	VUVU	########	########	N	9	zzz,dddd,eeee	N	
RP	Wilkins	475XLV	##	VUVU	########	########	Y	9	ppp,qqq,sss,ttt,www,ssss,uuuu,vvvv,xxxx,yyyy,aaaaa	N	
RP	Wilkins	475XLVMS	####	VUVU	########	########	N	9	ee,ff,ll,mm,tt,uu,yy,zz,zzz,dddd	N	
RP	Wilkins	475XLVMS	####	VUVU	########	########	Y	9	(gg),hh,ppp,qqq,ssss,uuuu,vvvv,xxxx,yyyy,aaaaa	N	
RP	Wilkins	475XLVMS	#	VUVU	########	########	N	9	ee,ff,ll,mm,tt,uu,yy,zz,zzz,dddd	N	
RP	Wilkins	475XLVMS	#	VUVU	########	########	Y	9	(gg),hh,ppp,qqq,ssss,uuuu,vvvv,xxxx,yyyy,aaaaa	N	
RP	Wilkins	475XLVMS	#	VUVU	########	########	N	9	zzz,dddd,eeee	N	
RP	Wilkins	475XLVMS	#	VUVU	########	########	Y	9	(ppp),qqq,sss,ttt,www,yyy,ssss,uuuu,vvvv,xxxx,yyyy,aaaaa	N	
RP	Wilkins	475XLVMS	#	VUVU	########	########	N	9	zzz,dddd,eeee	N	
RP	Wilkins	475XLVMS	#	VUVU	########	########	Y	9	(ppp),qqq,sss,ttt,www,yyy,ssss,uuuu,vvvv,xxxx,yyyy,aaaaa	N	
RP	Wilkins	475XLVMS	##	H	########	########	N	9	zzz,dddd,eeee	N	
RP	Wilkins	475XLVMS	##	H	########	########	Y	9	ppp,qqq,sss,ttt,www,ssss,uuuu,vvvv,xxxx,yyyy,aaaaa	N	
RP	Wilkins	575	3/4	H	########	########	N	5		Y	
RP	Wilkins	575	#	H	########	########	N	5		Y	
RP	Wilkins	575	####	H	########	########	N	7	gg,ee,tt,yy	Y	
RP	Wilkins	575	#	H	########	########	N	5	gg,ee,tt,yy	Y	
RP	Wilkins	575	#	H	########	########	N	5	gg,ee,tt,yy	Y	
RP	Wilkins	575	#	H	########	########	N	6	gg,ee,tt,yy	Y	
RP	Wilkins	575 (MOD-III)	####	H	########	########	N	5	ii	Y	

Type	Manufacturer	Model	Size	Orientation(s)	Approved	Renewed	≤0.25% Pb	Manual	Shutoffs	Spare Parts	Bypass
RP	Wilkins	575 (MOD-III)	####	H	########	########	N	5	ii	Y	
RP	Wilkins	575 (MOD-III)	#	H	########	########	N	5	ii	Y	
RP	Wilkins	575A	3/4	H	########	########	N	7	ii	Y	
RP	Wilkins	575A	#	H	########	########	N	7	ii	Y	
RP	Wilkins	575M10	##	H	########	########	N	6	gg,ee,tt,yy	Y	
RP	Wilkins	575M8	#	H	########	########	N	6	gg,ee,tt,yy	Y	
RP	Wilkins	975	3/4	H	########	########	N	8	ii	Y	
RP	Wilkins	975	#	H	########	########	N	8	ii	Y	
RP	Wilkins	975	####	H	########	########	N	8	ii	Y	
RP	Wilkins	975	####	H	########	########	N	8	ii	Y	
RP	Wilkins	975	#	H	########	########	N	8	ii	Y	
RP	Wilkins	975	####	H	########	########	N	8	gg,ee,ff,hh,tt,uu,yy,zz,ssss,tttt,vvvv,wwww,yyyy,zzzz	Y	
RP	Wilkins	975	#	H	########	########	N	8	gg,ee,ff,hh,tt,uu,yy,zz,ssss,tttt,vvvv,wwww,yyyy,zzzz	Y	
RP	Wilkins	975	#	H	########	########	N	8	gg,ee,ff,hh,tt,uu,yy,zz,ppp,ssss,tttt,vvvv,wwww,yyyy,zzzz	Y	
RP	Wilkins	975	#	H	########	########	N	8	gg,ee,ff,hh,tt,uu,yy,zz,ppp,ssss,tttt,vvvv,wwww,yyyy,zzzz	Y	
RP	Wilkins	975A	3/4	H	########	########	N	8	ii	Y	
RP	Wilkins	975A	#	H	########	########	N	8	ii	Y	
RP	Wilkins	975A	####	H	########	########	N	8	ii	Y	
RP	Wilkins	975A	####	H	########	########	N	8	ii	Y	
RP	Wilkins	975A	#	H	########	########	N	8	ii	Y	
RP	Wilkins	975BMS	####	H	########	########	N	8	(gg),ee,ff,hh,tt,uu,yy,zz,ssss,tttt,vvvv,wwww,yyyy,zzzz	N	
RP	Wilkins	975BMS	#	H	########	########	N	8	(gg),ee,ff,hh,tt,uu,yy,zz,ssss,tttt,vvvv,wwww,yyyy,zzzz	N	
RP	Wilkins	975BMS	#	H	########	########	N	8	gg,ee,ff,hh,tt,uu,yy,zz,ssss,tttt,vvvv,wwww,yyyy,zzzz	Y	
RP	Wilkins	975BMS	#	H	########	########	N	8	gg,ee,ff,hh,tt,uu,yy,zz,ssss,tttt,vvvv,wwww,yyyy,zzzz	Y	
RP	Wilkins	975BMS	#	H	########	########	N	8	(gg),ee,ff,hh,tt,uu,yy,zz,ppp,ssss,tttt,vvvv,wwww,yyyy,zzzz	N	
RP	Wilkins	975BMS	##	H	########	########	N	8	(gg),ee,ff,hh,tt,uu,yy,zz,ppp,ssss,tttt,vvvv,wwww,yyyy,zzzz	N	
RP	Wilkins	975MS	####	H	########	########	N	8	(gg),ee,ff,hh,tt,uu,yy,zz,ssss,tttt,vvvv,wwww,yyyy,zzzz	N	
RP	Wilkins	975MS	#	H	########	########	N	8	(gg),ee,ff,hh,tt,uu,yy,zz,ssss,tttt,vvvv,wwww,yyyy,zzzz	N	
RP	Wilkins	975MS	#	H	########	########	N	8	gg,ee,ff,hh,tt,uu,yy,zz,ssss,tttt,vvvv,wwww,yyyy,zzzz	Y	
RP	Wilkins	975MS	#	H	########	########	N	8	gg,ee,ff,hh,tt,uu,yy,zz,ssss,tttt,vvvv,wwww,yyyy,zzzz	Y	
RP	Wilkins	975MS	#	H	########	########	N	8	(gg),ee,ff,hh,tt,uu,yy,zz,ppp,ssss,tttt,vvvv,wwww,yyyy,zzzz	N	
RP	Wilkins	975MS	##	H	########	########	N	8	(gg),ee,ff,hh,tt,uu,yy,zz,ppp,ssss,tttt,vvvv,wwww,yyyy,zzzz	N	
RP	Wilkins	975XL	1/4	H	########	########	N	8	(ii)	N	
RP	Wilkins	975XL	3/8	H	########	########	N	8	(ii)	N	
RP	Wilkins	975XL	1/2	H	########	########	N	8	(ii)	N	
RP	Wilkins	975XL	3/4	H	########	########	N	8	(ii),ooo	N	
RP	Wilkins	975XL	#	H	########	########	N	8	(ii),ooo	N	
RP	Wilkins	975XL	####	H	########	########	N	8	(ii),ooo,ggg	N	
RP	Wilkins	975XL	####	H	########	########	N	8	(ii),ooo	N	
RP	Wilkins	975XL	#	H	########	########	N	8	(ii),bbb,ooo,bbbbb,ccccc	N	
RP	Wilkins	975XL2	1/4	H	########	########	Y	8	(iiii)	N	
RP	Wilkins	975XL2	3/8	H	########	########	Y	8	(iiii)	N	
RP	Wilkins	975XL2	1/2	H	########	########	Y	8	(iiii)	N	
RP	Wilkins	975XL2	3/4	H	########	########	Y	8	(iiii)	N	
RP	Wilkins	975XL2	#	H	########	########	Y	8	(iiii)	N	
RP	Wilkins	975XL2	####	H	########	########	Y	8	(iiii)	N	
RP	Wilkins	975XL2	####	H	########	########	Y	8	(iiii)	N	
RP	Wilkins	975XL2	#	H	########	########	Y	8	(iiii)	N	
RP	Wilkins	975XL2BMS	3/4	H	########	########	Y	8	(iiii)	N	
RP	Wilkins	975XL2BMS	#	H	########	########	Y	8	(iiii)	N	
RP	Wilkins	975XL2BMS	####	H	########	########	Y	8	(iiii)	N	
RP	Wilkins	975XL2BMS	####	H	########	########	Y	8	(iiii)	N	
RP	Wilkins	975XL2BMS	#	H	########	########	Y	8	(iiii)	N	
RP	Wilkins	975XL2MS	3/4	H	########	########	Y	8	(iiii)	N	
RP	Wilkins	975XL2MS	#	H	########	########	Y	8	(iiii)	N	
RP	Wilkins	975XL2MS	####	H	########	########	Y	8	(iiii)	N	
RP	Wilkins	975XL2MS	####	H	########	########	Y	8	(iiii)	N	
RP	Wilkins	975XL2MS	#	H	########	########	Y	8	(iiii)	N	
RP	Wilkins	975XL2SE	3/4	VUVU	########	########	Y	9	(iiii)	N	
RP	Wilkins	975XL2SE	3/4	VUVU	########	########	Y	9	(iiii)	N	
RP	Wilkins	975XL2SE	#	VUVU	########	########	Y	9	(iiii)	N	
RP	Wilkins	975XL2SE	#	VUVU	########	########	Y	9	(iiii)	N	
RP	Wilkins	975XL2SE	####	VUVU	########	########	Y	9	(iiii)	N	
RP	Wilkins	975XL2SE	####	VUVU	########	########	Y	9	(iiii)	N	
RP	Wilkins	975XL2SE	####	VUVU	########	########	Y	9	(iiii)	N	
RP	Wilkins	975XL2SE	####	VUVU	########	########	Y	9	(iiii)	N	
RP	Wilkins	975XL2SE	#	VUVU	########	########	Y	9	(iiii)	N	
RP	Wilkins	975XL2SE	#	VUVU	########	########	Y	9	(iiii)	N	
RP	Wilkins	975XL2SEU	3/4	VUVU	########	########	Y	9	(mmmmm)	N	
RP	Wilkins	975XL2SEU	3/4	VUVU	########	########	Y	9	(mmmmm)	N	
RP	Wilkins	975XL2SEU	#	VUVU	########	########	Y	9	(mmmmm)	N	
RP	Wilkins	975XL2SEU	#	VUVU	########	########	Y	9	(mmmmm)	N	
RP	Wilkins	975XL2SEU	####	VUVU	########	########	Y	9	(mmmmm)	N	
RP	Wilkins	975XL2SEU	####	VUVU	########	########	Y	9	(mmmmm)	N	
RP	Wilkins	975XL2SEU	####	VUVU	########	########	Y	9	(mmmmm)	N	
RP	Wilkins	975XL2SEU	####	VUVU	########	########	Y	9	(mmmmm)	N	
RP	Wilkins	975XL2SEU	#	VUVU	########	########	Y	9	(mmmmm)	N	
RP	Wilkins	975XL2SEU	#	VUVU	########	########	Y	9	(mmmmm)	N	
RP	Wilkins	975XL2TCU	1/2	H	########	########	Y	8	(iiii)	N	
RP	Wilkins	975XL2TCU	3/4	H	########	########	Y	8	(iiii)	N	
RP	Wilkins	975XL2TCU	#	H	########	########	Y	8	(iiii)	N	
RP	Wilkins	975XL2TCU	####	H	########	########	Y	8	(iiii)	N	
RP	Wilkins	975XL2TCU	####	H	########	########	Y	8	(iiii)	N	
RP	Wilkins	975XL2TCU	#	H	########	########	Y	8	(iiii)	N	
RP	Wilkins	975XL2U	3/4	H	########	########	Y	8	(mmmmm)	N	
RP	Wilkins	975XL2U	#	H	########	########	Y	8	(mmmmm)	N	
RP	Wilkins	975XL2U	####	H	########	########	Y	8	(mmmmm)	N	
RP	Wilkins	975XL2U	#	H	########	########	Y	8	(mmmmm)	N	
RP	Wilkins	975XL2V	3/4	VUVU	########	########	Y	9	(iiii)	N	
RP	Wilkins	975XL2V	3/4	VUVU	########	########	Y	9	(iiii)	N	
RP	Wilkins	975XL2V	#	VUVU	########	########	Y	9	(iiii)	N	
RP	Wilkins	975XL2V	#	VUVU	########	########	Y	9	(iiii)	N	
RP	Wilkins	975XLBF	#	H	########	########	N	8	(bbbbb)	N	
RP	Wilkins	975XLBFSS	#	H	########	########	N	8	(ccccc)	N	
RP	Wilkins	975XLBMS	3/4	H	########	########	N	8	(ii),ooo	N	
RP	Wilkins	975XLBMS	#	H	########	########	N	8	(ii),ooo	N	
RP	Wilkins	975XLBMS	####	H	########	########	N	8	(ii),ooo	N	
RP	Wilkins	975XLBMS	####	H	########	########	N	8	(ii),ooo	N	
RP	Wilkins	975XLBMS	#	H	########	########	N	8	(ii),ooo	N	
RP	Wilkins	975XLD	3/4	H	########	########	N	9	(ii),ooo	N	
RP	Wilkins	975XLD	3/4	H	########		Y	10	(iiii)	N	
RP	Wilkins	975XLMS	3/4	H	########	########	N	8	(ii),ooo	N	
RP	Wilkins	975XLMS	#	H	########	########	N	8	(ii),ooo	N	
RP	Wilkins	975XLMS	####	H	########	########	N	8	(ii),ooo	N	
RP	Wilkins	975XLMS	####	H	########	########	N	8	(ii),ooo	N	
RP	Wilkins	975XLMS	#	H	########	########	N	8	(ii),ooo	N	
RP	Wilkins	975XLSE	3/4	VUVU	########	########	N	9	(ii),ooo	N	
RP	Wilkins	975XLSE	3/4	VUVU	########	########	N	9	(ii),ooo	N	
RP	Wilkins	975XLSE	#	VUVU	########	########	N	9	(ii),ooo	N	
RP	Wilkins	975XLSE	#	VUVU	########	########	N	9	(ii),ooo	N	
RP	Wilkins	975XLSE	####	VUVU	########	########	N	9	(ii),ooo	N	
RP	Wilkins	975XLSE	####	VUVU	########	########	N	9	(ii),ooo	N	
RP	Wilkins	975XLSE	####	VUVU	########	########	N	9	(ii),ooo	N	
RP	Wilkins	975XLSE	####	VUVU	########	########	N	9	(ii),ooo	N	
RP	Wilkins	975XLSE	#	VUVU	########	########	N	9	(ii),ooo	N	
RP	Wilkins	975XLSE	#	VUVU	########	########	N	9	(ii),ooo	N	
RP	Wilkins	975XLSEU	3/4	VUVU	########	########	N	9	(ggg),xxx	N	
RP	Wilkins	975XLSEU	3/4	VUVU	########	########	N	9	(ggg),xxx	N	
RP	Wilkins	975XLSEU	#	VUVU	########	########	N	9	(ggg),xxx	N	
RP	Wilkins	975XLSEU	#	VUVU	########	########	N	9	(ggg),xxx	N	
RP	Wilkins	975XLSEU	####	VUVU	########	########	N	9	(ggg),xxx	N	
RP	Wilkins	975XLSEU	####	VUVU	########	########	N	9	(ggg),xxx	N	
RP	Wilkins	975XLSEU	####	VUVU	########	########	N	9	(ggg),xxx	N	
RP	Wilkins	975XLSEU	####	VUVU	########	########	N	9	(ggg),xxx	N	
RP	Wilkins	975XLSEU	#	VUVU	########	########	N	9	(ggg),xxx	N	

Type	Manufacturer	Model	Size	Orientation(s)	Approved	Renewed	≤0.25% Pb	Manual	Shutoffs	Spare Parts	Bypass
RP	Wilkins	975XLSEU	#	VUVU	########	########	N	9	(ggg),xxx	N	
RP	Wilkins	975XLST	3/8	H	########	########	Y	9	(ggggg)	N	
RP	Wilkins	975XLST	1/2	H	########	########	Y	9	(ggggg)	N	
RP	Wilkins	975XLTCU	1/2	H	########	########	N	8	(ii),ooo	N	
RP	Wilkins	975XLTCU	3/4	H	########	########	N	8	(ii),ooo,xxx	N	
RP	Wilkins	975XLTCU	#	H	########	########	N	8	(ii),ooo,xxx	N	
RP	Wilkins	975XLTCU	####	H	########	########	N	8	(ii),ooo,xxx	N	
RP	Wilkins	975XLTCU	####	H	########	########	N	8	(ii),ooo,xxx	N	
RP	Wilkins	975XLTCU	#	H	########	########	N	8	(ii),ooo,xxx	N	
RP	Wilkins	975XLU	3/4	H	########	########	N	8	(ggg),xxx	N	
RP	Wilkins	975XLU	#	H	########	########	N	8	(ggg),xxx	N	
RP	Wilkins	975XLU	####	H	########	########	N	8	(ggg),xxx	N	
RP	Wilkins	975XLU	#	H	########	########	N	8	(ggg),xxx	N	
RP	Wilkins	975XLV	3/4	VUVU	########	########	N	9	(ii),ooo	N	
RP	Wilkins	975XLV	3/4	VUVU	########	########	N	9	(ii),ooo	N	
RP	Wilkins	975XLV	#	VUVU	########	########	N	9	(ii),ooo	N	
RP	Wilkins	975XLV	#	VUVU	########	########	N	9	(ii),ooo	N	
RP	Wilkins	MBC-10"	##								
RP	Wilkins	MBC-8"	#								
RP	Apollo/Conbra	RPLF4AN	#	VUVU	########		Y	10	(yyy), cccc, dddd, mmmm, nnnn, xxxxx, yyyyy, zzzzz, aaaaaa	N	
RP	Apollo/Conbra	RPLF4AN	#	VUVU	########		Y	10	(yyy), cccc, dddd, mmmm, nnnn, xxxxx, yyyyy, zzzzz, aaaaaa	N	
RP	Apollo/Conbra	RPLF4AN	#	VUVU	########		Y	10	(yyy), cccc, dddd, mmmm, nnnn, xxxxx, yyyyy, zzzzz, aaaaaa	N	
RPDA	Ames	5000	#	H	########	########	N	8	(uu),ee,ff,gg,hh,ll,mm,oo,pp,tt,ccc,ddd,ffff,gggg	N	Conbraco 4020402 3/4 (H)
RPDA	Ames	5000	#	H	########	########	N	8	(uu),ee,ff,gg,hh,ll,mm,oo,pp,tt,ccc,ddd,ffff,gggg	N	Conbraco 4020402 3/4 (H)
RPDA	Ames	5000	#	H	########	########	N	8	(uu),ee,ff,gg,hh,ll,mm,oo,pp,tt,ccc,ddd,ffff,gggg	N	Conbraco 4020402 3/4 (H)
RPDA	Ames	5000	##	H	########	########	N	8	uu,ee,ff,gg,hh,ll,mm,oo,pp,tt,ccc,ddd,ffff,gggg	Y	Conbraco 4020402 3/4 (H)
RPDA	Ames	5000CIV	####	H	########	########	N	8	(pp),hh,mm,uu	N	Watts 909QT 3/4 (H)
RPDA	Ames	5000CIV	#	H	########	########	N	8	(pp),hh,mm,uu,eee	N	Watts 909QT 3/4 (H)
RPDA	Ames	5000CIV	#	H	########	########	N	8	(pp),hh,mm,uu,eee	N	Watts 909QT 3/4 (H)
RPDA	Ames	5000CIV	#	H	########	########	N	8	(pp),hh,mm,uu,eee	N	Watts 909QT 3/4 (H)
RPDA	Ames	5000CIV	#	H	########	########	N	8	(pp),hh,mm,uu,eee	N	Watts 909QT 3/4 (H)
RPDA	Ames	5000CIV	##	H	########	########	N	8	(pp),hh,mm,uu,eee	N	Watts 909QT 3/4 (H)
RPDA	Ames	Colt 500-GV	####	H	########	########	N	9	(zzz)	N	Watts 919QT 3/4" (H)
RPDA	Ames	Colt 500-GV	#	H	########	########	N	9	(zzz)	N	Watts 919QT 3/4" (H)
RPDA	Ames	Colt 500-GV	#	H	########	########	N	9	(zzz)	N	Watts 919QT 3/4" (H)
RPDA	Ames	Colt 500-GV	#	H	########	########	N	9	(zzz)	N	Watts 919QT 3/4" (H)
RPDA	Ames	Colt 500-GV	#	H	########	########	N	9	(zzz)		Watts 919QT 3/4" (H)
RPDA	Ames	Colt 500-GV	##	H	########	########	N	9	(zzz)	N	Watts 919QT 3/4" (H)
RPDA	Ames	Colt 500NBF	####	VUVU	########		N	9	(yyy)	N	Watts 919QT 3/4" (H)
RPDA	Ames	Colt 500NBF	#	VUVU	########	########	N	9	(yyy)	N	Watts 919QT 3/4" (H)
RPDA	Ames	Colt 500NBF	#	VUVU	########	########	N	9	(yyy)	N	Watts 919QT 3/4" (H)
RPDA	Ames	Colt 500NBF	#	VUVU	########		N	9	(yyy)		Watts 919QT 3/4" (H)
RPDA	Ames	Colt 500NGV	####	VUVU	########	########	N	9	(zzz)	N	Watts 919QT 3/4" (H)
RPDA	Ames	Colt 500NGV	#	VUVU	########	########	N	9	(zzz)	N	Watts 919QT 3/4" (H)
RPDA	Ames	Colt 500NGV	#	VUVU	########	########	N	9	(zzz)	N	Watts 919QT 3/4" (H)
RPDA	Ames	Colt 500NGV	#	VUVU	########	########	N	9	(zzz)		Watts 919QT 3/4" (H)
RPDA	Ames	Colt 500NGV	#	VUVU	########		N	9	(zzz)		Watts 919QT 3/4" (H)
RPDA	Ames	Colt 500ZBF	####	VUVU	########		N	9	(yyy)	N	Watts 919QT 3/4" (H)
RPDA	Ames	Colt 500ZBF	#	VUVU	########		N	9	(yyy)	N	Watts 919QT 3/4" (H)
RPDA	Ames	Colt 500ZBF	#	VUVU	########		N	9	(yyy)	N	Watts 919QT 3/4" (H)
RPDA	Ames	Colt 500ZBF	#	VUVU	########		N	9	(yyy)		Watts 919QT 3/4" (H)
RPDA	Ames	Colt 500ZGV	####	VUVU	########		N	9	(zzz)	N	Watts 919QT 3/4" (H)
RPDA	Ames	Colt 500ZGV	#	VUVU	########		N	9	(zzz)	N	Watts 919QT 3/4" (H)
RPDA	Ames	Colt 500ZGV	#	VUVU	########		N	9	(zzz)	N	Watts 919QT 3/4" (H)
RPDA	Ames	Colt 500ZGV	#	VUVU	########		N	9	(zzz)		Watts 919QT 3/4" (H)
RPDA	Ames	LFColt 500-GV	####	H	########		Y	9	(zzz)	N	Watts LF919QT 3/4" (H)
RPDA	Ames	LFColt 500-GV	#	H	########		Y	9	(zzz)	N	Watts LF919QT 3/4" (H)
RPDA	Ames	LFColt 500-GV	#	H	########		Y	9	(zzz)	N	Watts LF919QT 3/4" (H)
RPDA	Ames	LFColt 500-GV	#	H	########		Y	9	(zzz)	N	Watts LF919QT 3/4" (H)
RPDA	Ames	LFColt 500GV	####	H	########		Y	9	(zzz)	N	Watts LF919QT 3/4" (H)
RPDA	Ames	LFColt 500GV	#	H	########		Y	9	(zzz)	N	Watts LF919QT 3/4" (H)
RPDA	Ames	LFColt 500GV	#	H	########		Y	9	(zzz)	N	Watts LF919QT 3/4" (H)
RPDA	Ames	LFColt 500GV	#	H	########		Y	9	(zzz)	N	Watts LF919QT 3/4" (H)
RPDA	Ames	LFColt 500GV	#	H	########		Y	9	(zzz)	N	Watts LF919QT 3/4" (H)
RPDA	Ames	LFColt 500GV	##	H	########		Y	9	(zzz)	N	Watts LF919QT 3/4" (H)
RPDA	Ames	LFColt 500NBF	####	VUVU	########		Y	9	(zzz)	N	Watts LF919QT 3/4" (H)
RPDA	Ames	LFColt 500NBF	#	VUVU	########		Y	9	(zzz)	N	Watts LF919QT 3/4" (H)
RPDA	Ames	LFColt 500NBF	#	VUVU	########		Y	9	(zzz)	N	Watts LF919QT 3/4" (H)
RPDA	Ames	LFColt 500NGV	####	VUVU	########		Y	9	(zzz)	N	Watts LF919QT 3/4" (H)
RPDA	Ames	LFColt 500NGV	#	VUVU	########		Y	9	(zzz)	N	Watts LF919QT 3/4" (H)
RPDA	Ames	LFColt 500NGV	#	VUVU	########		Y	9	(zzz)	N	Watts LF919QT 3/4" (H)
RPDA	Ames	LFColt 500ZBF	####	VUVU	########		Y	9	(zzz)	N	Watts LF919QT 3/4" (H)
RPDA	Ames	LFColt 500ZBF	#	VUVU	########		Y	9	(zzz)	N	Watts LF919QT 3/4" (H)
RPDA	Ames	LFColt 500ZBF	#	VUVU	########		Y	9	(zzz)	N	Watts LF919QT 3/4" (H)
RPDA	Ames	LFColt 500ZGV	####	VUVU	########		Y	9	(zzz)	N	Watts LF919QT 3/4" (H)
RPDA	Ames	LFColt 500ZGV	#	VUVU	########		Y	9	(zzz)	N	Watts LF919QT 3/4" (H)
RPDA	Ames	LFColt 500ZGV	#	VUVU	########		Y	9	(zzz)	N	Watts LF919QT 3/4" (H)
RPDA	Ames	LFMaxim 500G	####	H	########		Y	9	(zzz)	N	Watts LF919QT 3/4" (H)
RPDA	Ames	LFMaxim 500G	#	H	########		Y	9	(zzz)	N	Watts LF919QT 3/4" (H)
RPDA	Ames	LFMaxim 500G	#	H	########		Y	9	(zzz)	N	Watts LF919QT 3/4" (H)
RPDA	Ames	LFMaxim 500G	#	H	########		Y	9	(zzz)	N	Watts LF919QT 3/4" (H)
RPDA	Ames	LFMaxim 500G	#	H	########		Y	9	(zzz)	N	Watts LF919QT 3/4" (H)
RPDA	Ames	LFMaxim 500G	##	H	########		Y	9	(zzz)	N	Watts LF919QT 3/4" (H)
RPDA	Ames	LFMaxim 500N	####	VUVU	########		Y	9	(zzz)	N	Watts LF919QT 3/4" (H)
RPDA	Ames	LFMaxim 500N	#	VUVU	########		Y	9	(zzz)	N	Watts LF919QT 3/4" (H)
RPDA	Ames	LFMaxim 500N	####	VUVU	########		Y	9	(zzz)	N	Watts LF919QT 3/4" (H)
RPDA	Ames	LFMaxim 500N	#	VUVU	########		Y	9	(zzz)	N	Watts LF919QT 3/4" (H)
RPDA	Ames	LFMaxim 500Z	####	VUVU	########		Y	9	(zzz)	N	Watts LF919QT 3/4" (H)
RPDA	Ames	LFMaxim 500Z	#	VUVU	########		Y	9	(zzz)	N	Watts LF919QT 3/4" (H)
RPDA	Ames	LFMaxim 500Z	####	VUVU	########		Y	9	(zzz)	N	Watts LF919QT 3/4" (H)
RPDA	Ames	LFMaxim 500Z	#	VUVU	########		Y	9	(zzz)	N	Watts LF919QT 3/4" (H)
RPDA	Ames	Maxim 500-GV	####	H	########	########	N	9	(zzz)	N	Watts 919QT 3/4" (H)
RPDA	Ames	Maxim 500-GV	#	H	########	########	N	9	(zzz)	N	Watts 919QT 3/4" (H)
RPDA	Ames	Maxim 500-GV	#	H	########	########	N	9	(zzz)	N	Watts 919QT 3/4" (H)
RPDA	Ames	Maxim 500-GV	#	H	########	########	N	9	(zzz)		Watts 919QT 3/4" (H)
RPDA	Ames	Maxim 500-GV	#	H	########	########	N	9	(zzz)	N	Watts 919QT 3/4" (H)
RPDA	Ames	Maxim 500-GV	##	H	########	########	N	9	(zzz)	N	Watts 919QT 3/4" (H)
RPDA	Ames	Maxim 500NBF	####	VUVU	########		N	9	(yyy)	N	Watts 919QT 3/4" (H)
RPDA	Ames	Maxim 500NBF	#	VUVU	########	########	N	9	(yyy)	N	Watts 919QT 3/4" (H)
RPDA	Ames	Maxim 500NBF	#	VUVU	########	########	N	9	(yyy)		Watts 919QT 3/4" (H)
RPDA	Ames	Maxim 500NBF	#	VUVU	########		N	9	(yyy)		Watts 919QT 3/4" (H)
RPDA	Ames	Maxim 500NGV	####	VUVU	########	########	N	9	(zzz)	N	Watts 919QT 3/4" (H)
RPDA	Ames	Maxim 500NGV	#	VUVU	########	########	N	9	(zzz)	N	Watts 919QT 3/4" (H)
RPDA	Ames	Maxim 500NGV	#	VUVU	########	########	N	9	(zzz)		Watts 919QT 3/4" (H)
RPDA	Ames	Maxim 500NGV	#	VUVU	########		N	9	(zzz)		Watts 919QT 3/4" (H)
RPDA	Ames	Maxim 500ZBF	####	VUVU	########		N	9	(yyy)	N	Watts 919QT 3/4" (H)
RPDA	Ames	Maxim 500ZBF	#	VUVU	########		N	9	(yyy)	N	Watts 919QT 3/4" (H)
RPDA	Ames	Maxim 500ZBF	#	VUVU	########		N	9	(yyy)		Watts 919QT 3/4" (H)
RPDA	Ames	Maxim 500ZGV	####	VUVU	########		N	9	(zzz)	N	Watts 919QT 3/4" (H)
RPDA	Ames	Maxim 500ZGV	#	VUVU	########		N	9	(zzz)	N	Watts 919QT 3/4" (H)
RPDA	Ames	Maxim 500ZGV	#	VUVU	########		N	9	(zzz)		Watts 919QT 3/4" (H)
RPDA	Apollo/Conbra	4070003	#								
RPDA	Apollo/Conbra	40700C3	#								
RPDA	Apollo/Conbra	40700E3	#								
RPDA	Apollo/Conbra	4070A03	#								
RPDA	Apollo/Conbra	4070AE3	#								
RPDA	Apollo/Conbra	4070C03	#								
RPDA	Apollo/Conbra	4070CC3	#								
RPDA	Apollo/Conbra	4070CE3	#								
RPDA	Apollo/Conbra	4070E03	#								
RPDA	Apollo/Conbra	4070EC3	#								
RPDA	Apollo/Conbra	4070EE3	#								
RPDA	Apollo/Conbra	4070G03	##								
RPDA	Apollo/Conbra	4070GC3	##								
RPDA	Apollo/Conbra	4070GE3	##								

Type	Manufacturer	Model	Size	Orientation(s)	Approved	Renewed	≤0.25% Pb	Manual	Shutoffs	Spare Parts	Bypass
RPDA	Apollo/Conbra	407AC3	#								
RPDA	Apollo/Conbra	RPDA40	#	H	########	########	N	8	(uu),cc,mm	Y	Apollo/Conbraco 4020402 3/4" (H), Apollo/Conbraco RP40 3/
RPDA	Apollo/Conbra	RPDA40	#	H	########	########	N	8	(uu),cc,mm	Y	Apollo/Conbraco 4020402 3/4" (H), Apollo/Conbraco RP40 3/
RPDA	Apollo/Conbra	RPDA40	#	H	########	########	N	8	(uu),cc,mm	Y	Apollo/Conbraco 4020402 3/4" (H), Apollo/Conbraco RP40 3/
RPDA	Apollo/Conbra	RPDA40	#	H	########	########	N	8	(uu),cc,mm	Y	Apollo/Conbraco 4020402 3/4" (H), Apollo/Conbraco RP40 3/
RPDA	Apollo/Conbra	RPDA40	##	H	########	########	N	8	(uu),cc,mm	Y	Apollo/Conbraco 4020402 3/4" (H), Apollo/Conbraco RP40 3/
RPDA	Apollo/Conbra	RPDALF4A	####	H	########		Y	10	(yyy), cccc, dddd, mmmm, nnnn, xxxxx, yyyyy, zzzzz, aaaaaa	N	Apollo RPLF4A 1/2" (H)
RPDA	Apollo/Conbra	RPDALF4A	#	H	########		Y	10	(yyy), cccc, dddd, mmmm, nnnn, xxxxx, yyyyy, zzzzz, aaaaaa	N	Apollo RPLF4A 1/2" (H)
RPDA	Apollo/Conbra	RPDALF4A	#	H	########		Y	10	(yyy), cccc, dddd, mmmm, nnnn, xxxxx, yyyyy, zzzzz, aaaaaa	N	Apollo RPLF4A 1/2" (H)
RPDA	Apollo/Conbra	RPDALF4A	#	H	########		Y	10	(yyy), cccc, dddd, mmmm, nnnn, xxxxx, yyyyy, zzzzz, aaaaaa	N	Apollo RPLF4A 1/2" (H)
RPDA	Apollo/Conbra	RPDALF4AN	####	VUVU	########		Y	10	(yyy), cccc, dddd, mmmm, nnnn, xxxxx, yyyyy, zzzzz, aaaaaa	N	Apollo RPLF4A 1/2" (H)
RPDA	Apollo/Conbra	RPDALF4AN	####	VUVU	########		Y	10	(yyy), cccc, dddd, mmmm, nnnn, xxxxx, yyyyy, zzzzz, aaaaaa	N	Apollo RPLF4A 1/2" (H)
RPDA	Apollo/Conbra	RPDALF4AN	#	VUVU	########		Y	10	(yyy), cccc, dddd, mmmm, nnnn, xxxxx, yyyyy, zzzzz, aaaaaa	N	Apollo RPLF4A 1/2" (H)
RPDA	Apollo/Conbra	RPDALF4AN	#	VUVU	########		Y	10	(yyy), cccc, dddd, mmmm, nnnn, xxxxx, yyyyy, zzzzz, aaaaaa	N	Apollo RPLF4A 1/2" (H)
RPDA	Apollo/Conbra	RPDALF4AN	#	VUVU	########		Y	10	(yyy), cccc, dddd, mmmm, nnnn, xxxxx, yyyyy, zzzzz, aaaaaa	N	Apollo RPLF4A 1/2" (H)
RPDA	Apollo/Conbra	RPDALF4AN	#	VUVU	########		Y	10	(yyy), cccc, dddd, mmmm, nnnn, xxxxx, yyyyy, zzzzz, aaaaaa	N	Apollo RPLF4A 1/2" (H)
RPDA	Apollo/Conbra	RPDALF4AN	#	VUVU	########		Y	10	(yyy), cccc, dddd, mmmm, nnnn, xxxxx, yyyyy, zzzzz, aaaaaa	N	Apollo RPLF4A 1/2" (H)
RPDA	Apollo/Conbra	RPDALF4AN	#	VUVU	########		Y	10	(yyy), cccc, dddd, mmmm, nnnn, xxxxx, yyyyy, zzzzz, aaaaaa	N	Apollo RPLF4A 1/2" (H)
RPDA	Apollo/Conbra	RPDALF4AR	####	H	########		N	10	(cccc), dddd, mmmm, nnnn, xxxxx, yyyyy, zzzzz, aaaaaa	N	Apollo RPLF4A 1/2"
RPDA	Apollo/Conbra	RPDALF4AR	#	H	########		N	10	(cccc), dddd, mmmm, nnnn, xxxxx, yyyyy, zzzzz, aaaaaa	N	Apollo RPLF4A 1/2"
RPDA	Apollo/Conbra	RPDALF4AR	#	H	########		N	10	(cccc), dddd, mmmm, nnnn, xxxxx, yyyyy, zzzzz, aaaaaa	N	Apollo RPLF4A 1/2"
RPDA	Apollo/Conbra	RPDALF4AR	#	H	########		N	10	(cccc), dddd, mmmm, nnnn, xxxxx, yyyyy, zzzzz, aaaaaa	N	Apollo RPLF4A 1/2"
RPDA	Cla-Val	18-4	##	H	########	########	N	8	hh,gg,qq,rr	Y	Cla-Val RP2 3/4 (H)
RPDA	Conbraco						N				
RPDA	Febco	826 Type YD	####								
RPDA	Febco	826 Type YD	#								
RPDA	Febco	826 Type YD	#								
RPDA	Febco	826 Type YD	#								
RPDA	Febco	826 Type YD	#								
RPDA	Febco	826 Type YD	##								
RPDA	Febco	826YD	####	H	########	########	N	8	(ff),mm,oo,pp,uu,zzz,ffff,gggg	N	Febco 825Y 3/4 (H)
RPDA	Febco	826YD	#	H	########	########	N	8	(ff),mm,oo,pp,uu,zzz,ffff,gggg	N	Febco 825Y 3/4 (H)
RPDA	Febco	826YD	#	H	########	########	N	8	(ff),mm,oo,pp,uu,zzz,ffff,gggg	N	Febco 825Y 3/4 (H)
RPDA	Febco	826YD	#	H	########	########	N	8	(ff),mm,oo,pp,uu,zzz,ffff,gggg	N	Febco 825Y 3/4 (H)
RPDA	Febco	826YD	#	H	########	########	N	8	(ff),mm,oo,pp,uu,zzz,ffff,gggg	N	Febco 825Y 3/4 (H)
RPDA	Febco	826YD	##	H	########	########	N	8	(ff),mm,oo,pp,uu,zzz,ffff,gggg	N	Febco 825Y 3/4 (H)
RPDA	Neptune						N				
RPDA	Watts	009NRSRPDA	#	H	########	########	N	8	oo,gg,ll,tt	Y	Watts 009M2QT 3/4 (H)
RPDA	Watts	009NRSRPDA	#	H	########	########	N	8	oo,gg,ll,tt	Y	Watts 009M2QT 3/4 (H)
RPDA	Watts	009OSYRPDA	#	H	########	########	N	8	pp,hh,mm,uu,zz	Y	Watts 009M2QT 3/4 (H)
RPDA	Watts	009OSYRPDA	#	H	########	########	N	8	pp,hh,mm,uu,zz	Y	Watts 009M2QT 3/4 (H)
RPDA	Watts	909DDC	#								
RPDA	Watts	909DDCM2	#								
RPDA	Watts	909RPDA	####	H	########	########	N	8	(pp),hh,mm,uu,zz,ffff,gggg	N	Watts 909QT 3/4 (H)
RPDA	Watts	909RPDA	#	H	########	########	N	8	(pp),hh,mm,uu,zz,eee,ffff,gggg	N	Watts 909QT 3/4 (H)
RPDA	Watts	909RPDA	#	H	########	########	N	8	(pp),hh,mm,uu,zz,eee,ffff,gggg	N	Watts 909QT 3/4 (H)
RPDA	Watts	909RPDA	#	H	########	########	N	8	(pp),hh,mm,uu,zz,eee,ffff,gggg	N	Watts 909QT 3/4 (H)
RPDA	Watts	909RPDA	#	H	########	########	N	8	(pp),hh,mm,uu,zz,eee,ffff,gggg	N	Watts 909QT 3/4 (H)
RPDA	Watts	909RPDA	##	H	########	########	N	8	(pp),hh,mm,uu,zz,eee,ffff,gggg	N	Watts 909QT 3/4 (H)
RPDA	Watts	957NRPDA-BF	####	VUVU	########		N	9	(yyy)	N	Watts 919QT 3/4" (H)
RPDA	Watts	957NRPDA-BF	#	VUVU	########	########	N	9	(yyy)	N	Watts 919QT 3/4" (H)
RPDA	Watts	957NRPDA-BF	#	VUVU	########	########	N	9	(yyy)	N	Watts 919QT 3/4" (H)
RPDA	Watts	957NRPDA-BF	#	VUVU	########		N	9	(yyy)		Watts 919QT 3/4" (H)
RPDA	Watts	957NRPDA-GV	####	VUVU	########	########	N	9	(zzz)	N	Watts 919QT 3/4" (H)
RPDA	Watts	957NRPDA-GV	#	VUVU	########	########	N	9	(zzz)	N	Watts 919QT 3/4" (H)
RPDA	Watts	957NRPDA-GV	#	VUVU	########	########	N	9	(zzz)	N	Watts 919QT 3/4" (H)
RPDA	Watts	957NRPDA-GV	#	VUVU	########	########	N	9	(zzz)		Watts 919QT 3/4" (H)
RPDA	Watts	957NRPDA-GV	#	VUVU	########		N	9	(zzz)		Watts 919QT 3/4" (H)
RPDA	Watts	957RPDA-GV	####	H	########	########	N	9	(zzz)	N	Watts 919QT 3/4" (H)
RPDA	Watts	957RPDA-GV	#	H	########	########	N	9	(zzz)	N	Watts 919QT 3/4" (H)
RPDA	Watts	957RPDA-GV	#	H	########	########	N	9	(zzz)	N	Watts 919QT 3/4" (H)
RPDA	Watts	957RPDA-GV	#	H	########	########	N	9	(zzz)	N	Watts 919QT 3/4" (H)
RPDA	Watts	957RPDA-GV	#	H	########	########	N	9	(zzz)		Watts 919QT 3/4" (H)
RPDA	Watts	957RPDA-GV	##	H	########	########	N	9	(zzz)	N	Watts 919QT 3/4" (H)
RPDA	Watts	957ZRPDA-BF	####	VUVU	########		N	9	(yyy)	N	Watts 919QT 3/4" (H)
RPDA	Watts	957ZRPDA-BF	#	VUVU	########		N	9	(yyy)	N	Watts 919QT 3/4" (H)
RPDA	Watts	957ZRPDA-BF	#	VUVU	########		N	9	(yyy)	N	Watts 919QT 3/4" (H)
RPDA	Watts	957ZRPDA-BF	#	VUVU	########		N	9	(yyy)		Watts 919QT 3/4" (H)
RPDA	Watts	957ZRPDA-GV	####	VUVU	########		N	9	(zzz)	N	Watts 919QT 3/4" (H)
RPDA	Watts	957ZRPDA-GV	#	VUVU	########		N	9	(zzz)	N	Watts 919QT 3/4" (H)
RPDA	Watts	957ZRPDA-GV	#	VUVU	########		N	9	(zzz)	N	Watts 919QT 3/4" (H)
RPDA	Watts	957ZRPDA-GV	#	VUVU	########		N	9	(zzz)		Watts 919QT 3/4" (H)
RPDA	Watts	967NRPDA-BF	####	VUVU	########		N	9	(yyy)	N	Watts 919QT 3/4" (H)
RPDA	Watts	967NRPDA-BF	#	VUVU	########	########	N	9	(yyy)	N	Watts 919QT 3/4" (H)
RPDA	Watts	967NRPDA-BF	#	VUVU	########	########	N	9	(yyy)		Watts 919QT 3/4" (H)
RPDA	Watts	967NRPDA-BF	#	VUVU	########		N	9	(yyy)		Watts 919QT 3/4" (H)
RPDA	Watts	967NRPDA-GV	####	VUVU	########	########	N	9	(zzz)	N	Watts 919QT 3/4" (H)
RPDA	Watts	967NRPDA-GV	#	VUVU	########	########	N	9	(zzz)	N	Watts 919QT 3/4" (H)
RPDA	Watts	967NRPDA-GV	#	VUVU	########	########	N	9	(zzz)		Watts 919QT 3/4" (H)
RPDA	Watts	967NRPDA-GV	#	VUVU	########		N	9	(zzz)		Watts 919QT 3/4" (H)
RPDA	Watts	967RPDA-GV	####	H	########	########	N	9	(zzz)	N	Watts 919QT 3/4" (H)
RPDA	Watts	967RPDA-GV	#	H	########	########	N	9	(zzz)	N	Watts 919QT 3/4" (H)
RPDA	Watts	967RPDA-GV	#	H	########	########	N	9	(zzz)	N	Watts 919QT 3/4" (H)
RPDA	Watts	967RPDA-GV	#	H	########	########	N	9	(zzz)		Watts 919QT 3/4" (H)
RPDA	Watts	967RPDA-GV	#	H	########	########	N	9	(zzz)	N	Watts 919QT 3/4" (H)
RPDA	Watts	967RPDA-GV	##	H	########	########	N	9	(zzz)	N	Watts 919QT 3/4" (H)
RPDA	Watts	967ZRPDA-BF	####	VUVU	########		N	9	(yyy)	N	Watts 919QT 3/4" (H)
RPDA	Watts	967ZRPDA-BF	#	VUVU	########		N	9	(yyy)	N	Watts 919QT 3/4" (H)
RPDA	Watts	967ZRPDA-BF	#	VUVU	########		N	9	(yyy)		Watts 919QT 3/4" (H)
RPDA	Watts	967ZRPDA-GV	####	VUVU	########		N	9	(zzz)	N	Watts 919QT 3/4" (H)
RPDA	Watts	967ZRPDA-GV	#	VUVU	########		N	9	(zzz)	N	Watts 919QT 3/4" (H)
RPDA	Watts	967ZRPDA-GV	#	VUVU	########		N	9	(zzz)		Watts 919QT 3/4" (H)
RPDA	Watts	990RPDA	#	H	########	########	N	8	pp,hh,mm,uu,zz	Y	Watts 009QT 3/4 (H)
RPDA	Watts	990RPDA	#	H	########	########	N	8	oo,gg,hh,ll,mm,pp,tt,uu	Y	Watts 009QT 3/4 (H)
RPDA	Watts	992RPDA	#	H	########	########	N	8	oo	Y	Watts 009QT 3/4 (H)
RPDA	Watts	992RPDA	##	H	########	########	N	8	oo	Y	Watts 009QT 3/4 (H)
RPDA	Watts	LF957NRPDA-B	####	VUVU	########		Y	9	(zzz)	N	Watts LF919QT 3/4" (H)
RPDA	Watts	LF957NRPDA-B	#	VUVU	########		Y	9	(zzz)	N	Watts LF919QT 3/4" (H)
RPDA	Watts	LF957NRPDA-B	#	VUVU	########		Y	9	(zzz)	N	Watts LF919QT 3/4" (H)
RPDA	Watts	LF957NRPDA-G	####	VUVU	########		Y	9	(zzz)	N	Watts LF919QT 3/4" (H)
RPDA	Watts	LF957NRPDA-G	#	VUVU	########		Y	9	(zzz)	N	Watts LF919QT 3/4" (H)
RPDA	Watts	LF957NRPDA-G	#	VUVU	########		Y	9	(zzz)	N	Watts LF919QT 3/4" (H)
RPDA	Watts	LF957RPDA-GV	####	H	########		Y	9	(zzz)	N	Watts LF919QT 3/4" (H)
RPDA	Watts	LF957RPDA-GV	#	H	########		Y	9	(zzz)	N	Watts LF919QT 3/4" (H)
RPDA	Watts	LF957RPDA-GV	#	H	########		Y	9	(zzz)	N	Watts LF919QT 3/4" (H)
RPDA	Watts	LF957RPDA-GV	#	H	########		Y	9	(zzz)	N	Watts LF919QT 3/4" (H)
RPDA	Watts	LF957RPDAGV	#	H	########		Y	9	(zzz)	N	Watts LF919QT 3/4" (H)
RPDA	Watts	LF957RPDAGV	##	H	########		Y	9	(zzz)	N	Watts LF919QT 3/4" (H)
RPDA	Watts	LF957ZRPDA-B	####	VUVU	########		Y	9	(zzz)	N	Watts LF919QT 3/4" (H)
RPDA	Watts	LF957ZRPDA-B	#	VUVU	########		Y	9	(zzz)	N	Watts LF919QT 3/4" (H)
RPDA	Watts	LF957ZRPDA-B	#	VUVU	########		Y	9	(zzz)	N	Watts LF919QT 3/4" (H)
RPDA	Watts	LF957ZRPDA-G	####	VUVU	########		Y	9	(zzz)	N	Watts LF919QT 3/4" (H)
RPDA	Watts	LF957ZRPDA-G	#	VUVU	########		Y	9	(zzz)	N	Watts LF919QT 3/4" (H)
RPDA	Watts	LF957ZRPDA-G	#	VUVU	########		Y	9	(zzz)	N	Watts LF919QT 3/4" (H)
RPDA	Wilkins	375ADA	####	H	########	########	N	9	(qqq),ttt,www,yyy,zzz,uuuu,vvvv,xxxx,yyyy,kkkkk,lllll	N	Wilkins 975XLD 3/4 (H)
RPDA	Wilkins	375ADA	####	H	########		Y	9	(qqq),ttt,www,yyy,uuuu,vvvv,xxxx,yyyy,kkkkk,lllll	N	Wilkins 975XLD 3/4 (H)
RPDA	Wilkins	375ADA	#	H	########	########	N	9	(qqq),ttt,www,yyy,zzz,uuuu,vvvv,xxxx,yyyy,kkkkk,lllll	N	Wilkins 975XLD 3/4 (H)
RPDA	Wilkins	375ADA	#	H	########		Y	9	(qqq),ttt,www,yyy,uuuu,vvvv,xxxx,yyyy,kkkkk,lllll	N	Wilkins 975XLD 3/4 (H)
RPDA	Wilkins	375ADA	#	H	########	########	N	9	(qqq),ttt,www,yyy,zzz,eeee,uuuu,vvvv,xxxx,yyyy,kkkkk,lllll	N	Wilkins 975XLD 3/4" (H)
RPDA	Wilkins	375ADA	#	H	########		Y	9	(qqq),ttt,www,yyy,xxxx,yyyy,kkkkk,lllll	N	Wilkins 975XLD 3/4" (H)
RPDA	Wilkins	375ADA	#	H	########	########	N	9	(qqq),ttt,www,yyy,zzz,eeee,uuuu,vvvv,xxxx,yyyy,kkkkk,lllll	N	Wilkins 975XLD 3/4" (H)
RPDA	Wilkins	375ADA	#	H	########		Y	9	(qqq),ttt,www,yyy,xxxx,yyyy,kkkkk,lllll	N	Wilkins 975XLD 3/4" (H)
RPDA	Wilkins	375ADA	#	H	########	########	N	9	(qqq),ttt,www,yyy,zzz,eeee,uuuu,vvvv,xxxx,yyyy,kkkkk,lllll	N	Wilkins 975XLD 3/4" (H)
RPDA	Wilkins	375ADA	#	H	########		Y	9	(qqq),ttt,www,yyy,xxxx,yyyy,kkkkk,lllll	N	Wilkins 975XLD 3/4" (H)
RPDA	Wilkins	375ADA	##	H	########	########	N	9	(qqq), ttt, www, yyy, zzz, eeee,uuuu,vvvv,xxxx,yyyy,kkkkk,lllll	N	Wilkins 975XLD 3/4" (H)

Type	Manufacturer	Model	Size	Orientation(s)	Approved	Renewed	≤0.25% Pb	Manual	Shutoffs	Spare Parts	Bypass
RPDA	Wilkins	375ADA	##	H	########		Y	9	(qqq),ttt,www,yyy,xxxx,yyyy,kkkkk,lllll	N	Wilkins 975XLD 3/4" (H)
RPDA	Wilkins	375ADAR	####	H	########	########	N	9	(qqq),ttt,www,yyy,zzz,uuuu,vvvv,xxxx,yyyy,kkkkk,lllll	N	Wilkins 975XLD 3/4 (H)
RPDA	Wilkins	375ADAR	####	H	########		Y	9	(qqq),ttt,www,yyy,uuuu,vvvv,xxxx,yyyy,kkkkk,lllll	N	Wilkins 975XLD 3/4 (H)
RPDA	Wilkins	375ADAR	#	H	########	########	N	9	(qqq),ttt,www,yyy,zzz,uuuu,vvvv,xxxx,yyyy,kkkkk,lllll	N	Wilkins 975XLD 3/4 (H)
RPDA	Wilkins	375ADAR	#	H	########		Y	9	(qqq),ttt,www,yyy,uuuu,vvvv,xxxx,yyyy,kkkkk,lllll	N	Wilkins 975XLD 3/4 (H)
RPDA	Wilkins	375ADAR	#	H	########	########	N	9	(qqq),ttt,www,yyy,zzz,eeee,uuuu,vvvv,xxxx,yyyy,kkkkk,lllll	N	Wilkins 975XLD 3/4 (H)
RPDA	Wilkins	375ADAR	#	H	########		Y	9	(qqq),ttt,www,yyy,xxxx,yyyy,kkkkk,lllll	N	Wilkins 975XLD 3/4 (H)
RPDA	Wilkins	375ADAR	#	H	########	########	N	9	(qqq),ttt,www,yyy,zzz,eeee,uuuu,vvvv,xxxx,yyyy,kkkkk,lllll	N	Wilkins 975XLD 3/4 (H)
RPDA	Wilkins	375ADAR	#	H	########		Y	9	(qqq),ttt,www,yyy,xxxx,yyyy,kkkkk,lllll	N	Wilkins 975XLD 3/4 (H)
RPDA	Wilkins	375ADAR	#	H	########	########	N	9	(qqq),ttt,www,yyy,zzz,eeee,uuuu,vvvv,xxxx,yyyy,kkkkk,lllll	N	Wilkins 975XLD 3/4 (H)
RPDA	Wilkins	375ADAR	##	H	########	########	N	9	(qqq),ttt,www,yyy,zzz,eeee,uuuu,vvvv,xxxx,yyyy,kkkkk,lllll	N	Wilkins 975XLD 3/4 (H)
RPDA	Wilkins	375ADAR	##	H	########		Y	9	(qqq),ttt,www,yyy,xxxx,yyyy,kkkkk,lllll	N	Wilkins 975XLD 3/4 (H)
RPDA	Wilkins	375ASTDA	####	H	########		N	10	(yyy),qqq,ttt,uuuu,vvvv,xxxx,yyyy,kkkkk,lllll	N	Wilkins 975XLD 3/4 (H)
RPDA	Wilkins	375ASTDA	####	H	########		Y	10	(yyy),qqq,ttt,uuuu,vvvv,xxxx,yyyy,kkkkk,lllll	N	Wilkins 975XLD 3/4 (H)
RPDA	Wilkins	375ASTDA	#	H	########		N	10	(yyy),qqq,ttt,uuuu,vvvv,xxxx,yyyy,kkkkk,lllll	N	Wilkins 975XLD 3/4 (H)
RPDA	Wilkins	375ASTDA	#	H	########		Y	10	(yyy),qqq,ttt,uuuu,vvvv,xxxx,yyyy,kkkkk,lllll	N	Wilkins 975XLD 3/4 (H)
RPDA	Wilkins	375ASTDA	#	H	########		N	10	(yyy),qqq,ttt,uuuu,vvvv,xxxx,yyyy,kkkkk,lllll	N	Wilkins 975XLD 3/4" (H)
RPDA	Wilkins	375ASTDA	#	H	########		Y	10	(yyy),qqq,ttt,uuuu,vvvv,xxxx,yyyy,kkkkk,lllll	N	Wilkins 975XLD 3/4" (H)
RPDA	Wilkins	375ASTDA	#	H	########		Y	10	(yyyy),ttt,www,yyy,uuuu,vvvv,xxxx,kkkkk,lllll	N	Wilkins 975XLD 3/4" (H)
RPDA	Wilkins	375ASTDA	#	H	########		Y	10	(yyyy),ttt,www,yyy,uuuu,vvvv,xxxx,kkkkk,lllll	N	Wilkins 975XLD 3/4" (H)
RPDA	Wilkins	375ASTDA	##	H	########		Y	10	(yyyy),ttt,www,yyy,uuuu,vvvv,xxxx,kkkkk,lllll	N	Wilkins 975XLD 3/4" (H)
RPDA	Wilkins	375ASTDAR	#	H	########		Y	10	(yyyy),ttt,www,yyy,uuuu,vvvv,xxxx,kkkkk,lllll	N	Wilkins 975XLD 3/4" (H)
RPDA	Wilkins	375ASTDAR	#	H	########		Y	10	(yyyy),ttt,www,yyy,uuuu,vvvv,xxxx,kkkkk,lllll	N	Wilkins 975XLD 3/4" (H)
RPDA	Wilkins	375ASTDAR	#	H	########		Y	10	(yyyy),ttt,www,yyy,uuuu,vvvv,xxxx,kkkkk,lllll	N	Wilkins 975XLD 3/4" (H)
RPDA	Wilkins	375ASTDAR	#	H	########		Y	10	(yyyy),ttt,www,yyy,uuuu,vvvv,xxxx,kkkkk,lllll	N	Wilkins 975XLD 3/4" (H)
RPDA	Wilkins	375ASTDAR	##	H	########		Y	10	(yyyy),ttt,www,yyy,uuuu,vvvv,xxxx,kkkkk,lllll	N	Wilkins 975XLD 3/4" (H)
RPDA	Wilkins	375ASTDAR	2 1/2	H	########		Y	10	(yyyy),ttt,www,yyy,uuuu,vvvv,xxxx,kkkkk,lllll	N	Wilkins 975XLD 3/4" (H)
RPDA	Wilkins	375DA	####	H	########	########	N	9	(hh),ff,mm,uu,zz,vvvv,wwww,yyyy,zzzz,kkkkk	N	Wilkins 975XLD 3/4 (H)
RPDA	Wilkins	375DA	####	H	########		Y	9	(hh),qqq,vvv,www,yyyy,zzzz,kkkkk	N	Wilkins 975XLD 3/4 (H)
RPDA	Wilkins	375DA	#	H	########	########	N	9	(hh),ff,mm,uu,zz,vvvv,wwww,yyyy,zzzz,kkkkk	N	Wilkins 975XLD 3/4 (H)
RPDA	Wilkins	375DA	#	H	########		Y	9	(hh),qqq,vvv,www,yyyy,zzzz	N	Wilkins 975XLD 3/4 (H)
RPDA	Wilkins	375DA	#	H	########	########	N	9	(hh),ff,mm,uu,zz,qqq,vvv,www.zzz,eeee,vvvv,wwww,yyyy,zzzz,kkkkk	N	Wilkins 975XLD 3/4 (H)
RPDA	Wilkins	375DA	#	H	########		Y	9	(hh),qqq,vvv,www,yyyy,zzzz	N	Wilkins 975XLD 3/4 (H)
RPDA	Wilkins	375DA	#	H	########	########	N	9	(hh),ff,mm,uu,zz,qqq,vvv,www.zzz,eeee,vvvv,wwww,yyyy,zzzz,kkkkk	N	Wilkins 975XLD 3/4 (H)
RPDA	Wilkins	375DA	#	H	########		Y	9	(hh),qqq,vvv,www,yyyy,zzzz	N	Wilkins 975XLD 3/4 (H)
RPDA	Wilkins	375DA	#	H	########	########	N	9	(hh),ff,mm,uu,zz,qqq,vvv,www.zzz,eeee,vvvv,wwww,yyyy,zzzz,kkkkk	N	Wilkins 975XLD 3/4" (H)
RPDA	Wilkins	375DA	#	H	########		Y	9	(hh),qqq,vvv,www,yyyy,zzzz	N	Wilkins 975XLD 3/4" (H)
RPDA	Wilkins	375DA	##	H	########	########	N	9	(hh),ff,mm,uu,zz,qqq,vvv,www.zzz,eeee,vvvv,wwww,yyyy,zzzz,kkkkk	N	Wilkins 975XLD 3/4" (H)
RPDA	Wilkins	375DA	##	H	########		Y	9	(hh),qqq,vvv,www,yyyy,zzzz	N	Wilkins 975XLD 3/4" (H)
RPDA	Wilkins	475DA	#	VUVU	########	########	N	9	(qqq),ttt,www,yyy,zzz,eeee,uuuu,vvvv,xxxx,yyyy,kkkkk,lllll	N	Wilkins 975XLD 3/4 (H)
RPDA	Wilkins	475DA	#	VUVU	########		Y	9	(hh),qqq,vvv,www,yyyy,zzzz	N	Wilkins 975XLD 3/4 (H)
RPDA	Wilkins	475DA	#	VUVU	########	########	N	9	(qqq),ttt,www,yyy,zzz,eeee,uuuu,vvvv,xxxx,yyyy,kkkkk,lllll	N	Wilkins 975XLD 3/4 (H)
RPDA	Wilkins	475DA	#	VUVU	########		Y	9	(hh),qqq,vvv,www,yyyy,zzzz	N	Wilkins 975XLD 3/4 (H)
RPDA	Wilkins	475DA	#	VUVU	########	########	N	9	(qqq),ttt,www,yyy,zzz,eeee,uuuu,vvvv,xxxx,yyyy,kkkkk,lllll	N	Wilkins 975XLD 3/4 (H)
RPDA	Wilkins	475DA	#	VUVU	########		Y	9	(hh),qqq,vvv,www,yyyy,zzzz	N	Wilkins 975XLD 3/4 (H)
RPDA	Wilkins	475DAV	#	VUVU	########	########	N	9	(qqq),mm,ttt,www,yyy,zzz,eeee,uuuu,vvvv,xxxx,yyyy,kkkkk,lllll	N	Wilkins 975XLD 3/4 (H)
RPDA	Wilkins	475DAV	#	VUVU	########		Y	9	(hh),qqq,vvv,www,yyyy,zzzz	N	Wilkins 975XLD 3/4 (H)
RPDA	Wilkins	475DAV	#	VUVU	########	########	N	9	(qqq),mm,ttt,www,yyy,zzz,eeee,uuuu,vvvv,xxxx,yyyy,kkkkk,lllll	N	Wilkins 975XLD 3/4 (H)
RPDA	Wilkins	475DAV	#	VUVU	########		Y	9	(hh),qqq,vvv,www,yyyy,zzzz	N	Wilkins 975XLD 3/4 (H)
RPDA	Wilkins	475DAV	#	VUVU	########	########	N	9	(qqq),mm,ttt,www,yyy,zzz,eeee,uuuu,vvvv,xxxx,yyyy,kkkkk,lllll	N	Wilkins 975XLD 3/4 (H)
RPDA	Wilkins	475DAV	#	VUVU	########		Y	9	(hh),qqq,vvv,www,yyyy,zzzz	N	Wilkins 975XLD 3/4 (H)
RPDA	Wilkins	975DA	####	H	########	########	N	8	(hh),ff,uu,zz,vvvv,wwww,yyyy,zzzz	N	Wilkins 975 3/4 (H)
RPDA	Wilkins	975DA	#	H	########	########	N	8	(hh),ff,uu,zz,vvvv,wwww,yyyy,zzzz	N	Wilkins 975 3/4 (H)
RPDA	Wilkins	975DA	#	H	########	########	N	8	hh,ff,mm,uu,zz,vvvv,wwww,yyyy,zzzz	Y	Wilkins 975 3/4 (H)
RPDA	Wilkins	975DA	#	H	########	########	N	8	hh,ff,mm,uu,zz,vvvv,wwww,yyyy,zzzz	Y	Wilkins 975 3/4 (H)
RPDA	Wilkins	975DA	#	H	########	########	N	8	(hh),ff,uu,zz,vvvv,wwww,yyyy,zzzz	N	Wilkins 975 3/4 (H)
RPDA	Wilkins	975DA	##	H	########	########	N	8	(hh),ff,uu,zz,vvvv,wwww,yyyy,zzzz	N	Wilkins 975 3/4 (H)
RPDA	Febco	LF866	####	H	########		Y	10	(mm), ll	N	Watts 3/4" LF619 (H)
RPDA	Febco	LF866	#	H	########		Y	10	(mm), ll	N	Watts 3/4" LF619 (H)
RPDA	Febco	LF866	#	H	########		Y	10	(mm), ll	N	Watts 3/4" LF619 (H)
RPDA	Febco	LF866	#	H	########		Y	10	(mm), ll	N	Watts 3/4" LF619 (H)
RPDA	Febco	LF866	#	H	########		Y	10	(mm), ll	N	Watts 3/4" LF619 (H)
RPDA	Febco	LF866	##	H	########		Y	10	(mm), ll	N	Watts 3/4" LF619 (H)
RPDA	Febco	LF886V	####	VUVU	########		Y	10	(mm), ll	N	Watts 3/4" LF619 (HVU)
RPDA	Febco	LF886V	####	VUVU	########		Y	10	(mm), ll	N	Watts 3/4" LF619 (HVD)
RPDA	Febco	LF886V	#	VUVU	########		Y	10	(mm), ll	N	Watts 3/4" LF619 (HVU)
RPDA	Febco	LF886V	#	VUVU	########		Y	10	(mm), ll	N	Watts 3/4" LF619 (HVD)
RPDA	Febco	LF886V	#	VUVU	########		Y	10	(mm), ll	N	Watts 3/4" LF619 (HVU)
RPDA	Febco	LF886V	#	VUVU	########		Y	10	(mm), ll	N	Watts 3/4" LF619 (HVD)
RPDA	Febco	LF886V	#	VUVU	########		Y	10	(mm), ll	N	Watts 3/4" LF619 (HVU)
RPDA	Febco	LF886V	#	VUVU	########		Y	10	(mm), ll	N	Watts 3/4" LF619 (HVD)
RPDA	Febco	LF886V	#	VUVU	########		Y	10	(mm), ll	N	Watts 3/4" LF619 (HVU)
RPDA	Febco	LF886V	#	VUVU	########		Y	10	(mm), ll	N	Watts 3/4" LF619 (HVD)
SVB	Watts	008PCQT	3/8	VUH	########	########	N	9	(vv),xx,ooo,hhhh,pppp	N	
SVB	Watts	008PCQT	1/2	VUH	########	########	N	9	(vv),xx,ooo,hhhh,pppp,rrrrr	N	
SVB	Watts	008PCQT	3/4	VUH	########	########	N	9	(vv),xx,ooo,hhhh,pppp,rrrrr	N	
SVB	Watts	008PCQT	#	VUH	########	########	N	9	(vv),xx,ooo,hhhh,pppp,rrrrr	N	
SVB	Watts	LF008PCQT	3/8	VUH	########		Y	9	(vv),xx,ooo,hhhh,pppp	N	
SVB	Watts	LF008PCQT	1/2	VUH	########		Y	9	(vv),xx,ooo,hhhh,pppp,rrrrr	N	
SVB	Watts	LF008PCQT	3/4	VUH	########		Y	9	(vv),xx,ooo,hhhh,pppp,rrrrr	N	
SVB	Watts	LF008PCQT	#	VUH	########		Y	9	(vv),xx,ooo,hhhh,pppp,rrrrr	N	
SVB	Wilkins	460	3/8	VUH	########	########	N	9	(ooo),ii	N	
SVB	Wilkins	460	1/2	VUH	########	########	N	9	(ooo),ii	N	
SVB	Wilkins	460	3/4	VUH	########	########	N	9	(ooo),ii	N	
SVB	Wilkins	460	#	VUH	########	########	N	9	(ooo),ii	N	
SVB	Wilkins	460XL	3/8	VUH	########	########	Y	9	(iiii)	N	
SVB	Wilkins	460XL	1/2	VUH	########	########	Y	9	(iiii)	N	
SVB	Wilkins	460XL	3/4	VUH	########	########	Y	9	(iiii)	N	
SVB	Wilkins	460XL	#	VUH	########	########	Y	9	(iiii)	N	

Special Notices

From time to time the Foundation issues Special Notices when specific information needs to be brought before the Members of the Foundation. A copy of the notices are sent to Foundation Members as they are published. Notices may also be found on the Internet at the World Wide Web address of http://www.usc.edu/fccchr/notice.html

Notices are summarized as follows.

Notice 96-001
This notice lists Ames assemblies which have been reported with low check valve readings. Corrections to the problem are discussed.
Notice 97-001
This Notice discusses changes in the Wilkins 975 8" and 10" reduced pressure principle assemblies. A change in the retaining cup in the relief valve stem.
Notice 97-002
This notice identifies Ames 2000SS, 3000SS, and 4000SS series assemblies were discovered to have unapproved components.
Notice 97-003
This notice lists assemblies which were NOT Approved by the Foundation, although advertisements may have implied otherwise.
Notice 98-001
This notice advises members of certain action in the Federal Register regarding cross-connection control programs.
Notice 98-002
This notice advises members of Wilkins 950 series and 975 series modifications.
Notice 99-001
This notice lists assemblies which were NOT Approved by the Foundation, although advertisements may have implied otherwise.
Notice 99-002
This notice lists assemblies which were NOT Approved by the Foundation, although advertisements may have implied otherwise.
Notice 99-003
This notice lists assemblies which were NOT Approved by the Foundation, although advertisements may have implied otherwise.
Notice 01-001
Discuss silicon parts in certain Febco relief valves
Notice 01-002/Revised Notice 01-002-R1
This notice discusses some check valves not approved in certain Ames and Watts asemblies
Notice 01-003
This notice lists assemblies which were NOT Approved by the Foundation, although advertisements may have implied otherwise.
Notice 02-001
This notice explains there are some specific Febco assemblies with unapproved check valve retainers.
Notice 03-001
This notice explains there are some improper markings of model designations on some Wilkins assemblies
Notice 03-002
This notice explains there is the possibility of the interference of the check valves on some Ames and Watts assemblies
Notice 04-001
This notice identifies some Febco 825YA assemblies sold with a dimensional variation
Notice 05-001
This Notice identifies some Ames and Watts assemblies sold with unapproved disc material.
Notice 06-001
This notice identifies unapproved guides found in certain Febco assemblies
Notice 06-002
This notice identifies a change in the design of the Flomatic PVBs
Notice 06-003
Notice regarding Cash-Acme Assemblies
Notice 07-001
Out of tolerance springs on Conbraco assemblies
Notice 09-001
Unapproved Third party components are being distributed
Notice 13-001
Modifications to guiding surfaces of the check valves on Wilkins Assemblies
Notice 14-001
Clarifies the Approval status of Apollo/Conbraco backflow prevention assemblies
Notice 14-002
Clarifies the method in which the model designation is indicated on the Wilkins 3/4" 950XLD and 975XLD assemblies
Notice 15-001
This notice has been prepared to review Special Notice 14-002 and clarify the USC Approval Status of Wilkins Reduced Pressure Principle Detector Assemblies (RPDAs).