List of Approved Backflow Prevention Assemblies

10 June 2016

Supersedes All Prior Lists

2016 © University of Southern California

Foundation for Cross-Connection Control and Hydraulic Research

a Division of the University of Southern California

ADDITIONS:

Double Check Valve Assemblies

Reduced Pressure Priciple Assemblies

Double Check Detector Assemblies

Reduced Pressure Principle Detector Assembly

Type	Manufacturer	Model	Size	Orientation(s)	Approved
RPDA	Apollo/Conbraco	RPDALF4AN	2 1/2	VUVD	12-May-2016
RPDA	Apollo/Conbraco	RPDALF4AN	2 1/2	VUVU	12-May-2016
RPDA	Apollo/Conbraco	RPDALF4AN	3	VUVD	12-May-2016
RPDA	Apollo/Conbraco	RPDALF4AN	3	VUVU	12-May-2016

Double Check Detector Assemblies-Type II

Reduced Pressure Principle Detector Assemblies-Type II

Spill Resistant Pressure Vacuum Breakers

Notices

NOTICE REGARDING RENEWALS:
The original Certificate of Approval–identified by the Edition of the Manual and the Approved date shown in this list–is valid as of the date of this list, only if the original or renewal date shown hereon is within three (3) years of the date of this list. The responsibility to request a renewal of an Approval is that of each manufacturer. The USC Foundation retains the right of determining the extent of re-evaluation required before renewal is granted. Certificates of Approval are not recalled for the purpose of updating the effective date. This revision of date is only published via the current List of Approved Backflow Prevention Assemblies.

NOTICE REGARDING INSTALLATION:
Unless otherwise specified by the manufacturer all assemblies are to be installed on cold potable water applications - below 110oF. Also all of the assemblies listed are Approved for the INDICATED ORIENTATION(S) ONLY (Please see the legend page 6). Rotation of assemblies on either axis will invalidate the USC Foundation's Approval. Use of spare parts other than those of the original manufacturer invalidates the Approval. Rotation of shutoff valves of one bolt hole only is permitted only for the 2 1/2" and larger flanged assemblies.
NOTICE REGARDING LEAD CONTENT:
In order to determine if backflow preventers comply with lead-free requirements of several states and the Safe Drinking Water Act, USC Foundation Approved assemblies which comply with the ≤ 0.25% lead requirement are indicated by a Y in the column ≤ 0.25%Pb.

NOTICE REGARDING LIST UPDATES

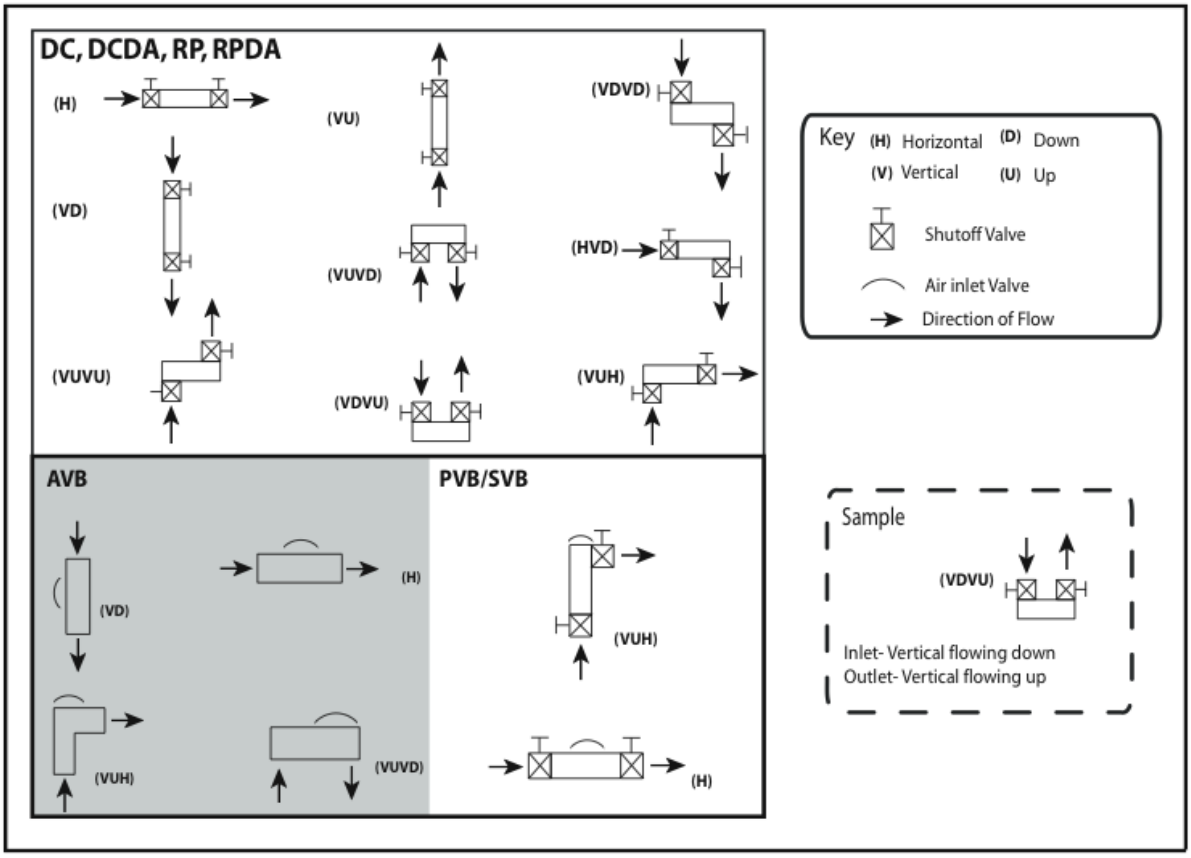
DC, DCDA, RP, RPDA
(H)
(VU)
(VDVD)
(VD)
(VUVD)
(HVD)
(VUVU)
(VDVU)
(VUH)
AVB
(VD)
(H)
(VUH)
(VUVD)
PVB/SVB
(VUH)
(H)
Key
(H) Horizontal
(D) Down
(V) Vertical
(U) Up
Shutoff Valve
Air inlet Valve
Direction of Flow
Sample
(VDVU)
Inlet- Vertical flowing down
Outlet- Vertical flowing up

Shutoff Valve Designations

The backflow prevention assemblies shown on this list have been evaluated with a specific set of shutoff valves as an integral part of the assembly. The specific shutoff valves are coded by a parenthetic code shown with each assembly. This coding of shutoff valves is defined below. Other shutoff valves having similar performance characteristics which permit the assembly to comply with the standards are also shown immediately after the original shutoff valves. The use of any shutoff valve on a specific assembly, other than those listed for that specific assembly invalidates the Approval. Assemblies listed with a Y in the “spare parts only" column may not include the shutoff valve designation.

(aa)	American Figure 1-QT
(bb)	American Figure 17-NRS RW
(cc)	American Figure 370OSY RW
(dd)	Apollo Series 7B-QT
(ee)	AVK Series 25-NRS
(ff)	AVK Series 25-OSY (Nibco F607RW OSY)
(gg)	Clow R/W Model 2640 (FxF) - NRS
	(formerly Clow R/W F6102-NRS)
(hh)	Clow R/W Model 2640 (FxF) - OSY
	(formerly Clow R/W F6136-OSY)
(ii)	Fortune Series 620/623 (C84400 Bronze) (Formerly Figure 601)
	Private labeled as: Ames, Buckner, Febco, Flomatic, Hersey and Wilkins
(jj)	Kennedy Ken Seal I-NRS
(kk)	Kennedy Ken Seal-OSY
(ll)	Kennedy Model KS-FW Figure 8561 (FxF) - NRS (2 1/2" - 10")
	Kennedy Model KS-RW Figure 7561 (FxF) - NRS (4" - 10")
	(formerly Kennedy Ken Seal II-NRS)
(mm)	Kennedy Model KS-FW Figure 8068 (FxF) - OSY (2 1/2" - 10")
	Kennedy Model KS-RW Figure 7068 (FxF) - OSY (4" - 10")
	(formerly Kennedy Ken Seal II-OSY)
(nn)	Lee Brass-QT
(oo)	Watts Model 405 (2-1/2" - 10" NRS-RW FxF)
(pp)	Watts Model 408 (2-1/2" - 10" OSY-RW FxF)
(qq)	Mueller R/W HP NRS
(rr)	Mueller R/W HP OSY
(ss)	Toro.Orion Integral Ball Valve-QT
(tt)	American Flow Control (Waterous) Series 500-NRS
(uu)	American Flow Control (Waterous Series 500-OSY
(vv)	Watts Model FBV & FBV-E (1/4" - 2" Ball Valve QT)
	Ames Model FBV & FBV-E (1/4" - 2" Ball Valve QT)
(ww)	Watts Moel G4000-FDA (2-1/2" -10" Ball Valve FxF)
(xx)	Watts Model 6080 & 6080-E (1/4" - 2" Ball Valve QT)
(yy)	Matco-Norca 10RW (NRS)
(zz)	Matco-Norca 105U (OSY)
(aaa)	American Flow Control Series 2500-NRS
(bbb)	American Flow Control Series 2500-OSY
(ccc)	M&H Model 4067-02 (NRS)
(ddd)	M&H Model 4068-02(OSY)
(eee)	Stockham Model G-610 (OSY)
(fff)	Febco Series 620 QT
(ggg)	Fortune Figure 620U-QT
(hhh)	Watts Model S-FBV & S-FBV-E (1/4" - 1" Ball Valve QT)
(iii)	Mueller Model A2360-NRS
(int)	Shutoff Valve is integral part of assembly
(jjj)	Febco Series 621-QT
(kkk)	Febco Series 620U-QT
(lll)	Mueller Model R2360-OSY
(mmm)	Conbraco Series IBVE-125-QT
(nnn)	Kennedy Model KS-FW Figure 8701 (FxF) - NRS (3" - 10") Post Indicator/Tapping
	Kennedy Model KS-RW Figure 7701 (FxF) - NRS (4" - 10") Post Indicator/Tapping
	(formerly Kennedy Ken Seal II Post Indicator/Tapping)
(ooo)	Ningbo Ball Valves (Febco 622F & 622FT, Watts Series 855-QT & Wilkins Series 850-QT)(1/4" - 2" Ball Valve QT)
(ppp)	Clow R/W Model 2639 (GxF) - NRS (2 1/2" - 3")
	Clow R/W Model 2638 (GxF) - NRS (4" - 10")
	(formerly Clow Series F6105-NRS)
(qqq)	Clow R/W Model 2639 (GxF) - OSY (2 1/2" - 3")
	Clow R/W Model 2638 (GxF) - OSY (4" - 10")
	(formerly Clow Series F6138-OSY)
(rrr)	Apollo Series 7B-308-01 (& 7B-308-31)
(sss)	Clow R/W Model 2639 (GxG) - NRS (2 1/2" - 3")
	Clow R/W Model 2638 (GxFG) - NRS (4" - 10")
	(formerly Clow Series F6104-NRS)
(ttt)	Clow R/W Model 2639 (GxG) - OSY (2 1/2" - 3")
	Clow R/W Model 2638 (GxFG) - OSY (4" - 10")
	(formerly Clow Series F6137-OSY)
(uuu)	Apollo Series 7H-QT
(vvv)	Clow R/W Model 2640 (FxF) - OSY Post Indicator/Tapping Valve
	(formerly Clow R/W F6136-OSY Post Indicator/Tapping Valve)
(www)	Clow R/W Model 2639 (GxF) - OSY (2 1/2" - 3") Post Indicator/Tapping Valve
	Clow R/W Model 2640 (GxF) - OSY (4" - 10") Post Indicator/Tapping Valve
	(formerly Clow R/W F6138-OSY Post Indicator/Tapping Valve)
(xxx)	Ningbo Union Ball Valves (Febco 622UF & 622UFT & Wilkins 850U-QT)(1/2" - 2" Ball Valve QT)
(yyy)	Victaulic Series 702 (Butterfly valves)
(zzz)	Kennedy Model KS-RW Figure 7092ABF (FxG) - OSY
	(formerly Kennedy Series 7092ABF-OSY)
(aaaa)	Union Model GV12 (flange by groove)-OSY
(bbbb)	Enbee Model GV12 (flange by groove)-OSY
(cccc)	Kennedy Model KS-RW Figure 7092 (FxG) - OSY
	(formerly Kennedy Series 7092 (GxF) - OSY)
(dddd)	Kennedy Model KS-RW Figure 7592 (FxG) - NRS
	(formerly Kennedy Series 7592ABF - NRS)
(eeee)	Kennedy Model KS-RW Figure 7592PABF (FxG) - NRS Post Indicator/Tapping Valve
	(formerly Kennedy Series 7592PABF-Post Indicator/Tapping Valve)
(ffff)	Watts Model 409 (2-1/2" - 10" OSY-RW FxF)
(gggg)	Watts Model 409 (2-1/2" - 10" OSY-RW FxG)
(hhhh)	Watts Model LF-FBV & LF-FBV-E (1/4" - 2" Ball Valve QT)
	Ames Model LF-FBV & LF-FBV-E (1/4" - 2" Ball Valve QT)
	Febco Model LF-FBV & LF-FBV-E (1/4" - 2" Ball Valve QT)
(iiii)	Wilkins Series 850XL (850TXL) - QT
(jjjj)	WATTS Model 409 (2" OSY-RW NPTxNPT)
(kkkk)	Kennedy Model KS-RW Figure 7093 (GxG) - OSY
(llll)	Kennedy Model KS-RW Figure 7593 (GxG) - NRS
(mmmm)	Kennedy Model KS-RW Figure 7093ABF (GxG) - OSY
(nnnn)	Kennedy Model KS-RW Figure 7593ABF (GxG) - NRS

(oooo)	Kennedy Model KS-RW Figure 7593PABF (GxG) - NRS Post Indicator
(pppp)	Watts Model L-FBV & L-FBV-E (1/4" - 2" Ball Valve QT)
	Ames Model L-FBV & L-FBV-E (1/4" - 2" Ball Valve QT)
	Febco Model L-FBV & L-FBV-E (1/4" - 2" Ball Valve QT)
(qqqq)	Kennedy Figure G300E - Butterfly Valve (4",6")
(rrrr)	Kennedy Figure 02G - Butterfly Valve (8")
(ssss)	Wilkins Model 48 (GXF) - NRS (2-1/2" - 12")
(tttt)	Wilkins Model 48 (FXF) - NRS (2-1/2" - 12")
(uuuu)	Wilkins Model 48 (GXG) - NRS (2-1/2" - 12") Post Indicator/Tapping Valve
(vvvv)	Wilkins Model 48 (GXF) - NRS (2-1/2" - 12") Post Indicator/Tapping Valve
(wwww)	Wilkins Model 48 (FXF) - NRS (2-1/2" - 12") Post Indicator/Tapping Valve
(xxxx)	Wilkins Model 48 (GXG) - OSY (2-1/2" - 12")
(yyyy)	Wilkins Model 48 (GXF) - OSY (2-1/2" - 12")
(zzzz)	Wilkins Model 48 (FXF) - OSY (2-1/2" - 12")
(aaaaa)	Wilkins Model 48 (GXG) - NRS (2-1/2" - 12")
(bbbbb)	Milwaukee BB-SC100 - Butterfly Valve
(ccccc)	Milwaukee BB-SCS02 - Butterfly Valve (with gearbox)
(ddddd)	Flomatic Model NRS
(eeeee)	Watts Model FBV-FP & FBV-E-FP (3/4" - 2" Ball Valve w/Gearbox)
	Ames Model LFAFBV-FP & LFAFBV-E-FP (3/4" - 2" Ball Valve w/Gearbox)
(fffff)	Watts Model L-FBV-QT (2-1/2" - 4" Ball Valve NPTxG)
(ggggg)	Wilkins Model 850MSS
(hhhhh)	Fortune Series 620/623 (c89520 unleaded bronze)
(iiiii)	Apollo Series 77B-100 and 77C-100 - QT
(jjjjj)	Apollo Series 77BLF-100 and 77CLF-100 - QT
(kkkkk)	Wilkins Model 49 (GXF) - (2 1/2" - 10")
(lllll)	Wilkins Model 49 (GXG) - (2 1/2" - 10")
(mmmmm	Wilkins 850UXL (850TUXL) -QT
(nnnnn)	Watts Model 405 (2 1/2" - 10" NRS-RW FxG)
(ooooo)	ARI HC260 and HC262 Ball Valves - QT
(ppppp)	Febco Model LF622UF & LF622UFT (1/2" - 2" Ball Valve QT)
(qqqqq)	Febco Model LF622F & LF622FT (1/2" - 2" Ball Valve QT)
(rrrrr)	Watts Model LFFBV-FRG & LFFBV-E-FRG (1/2" - 2" Ball Valve QT)
(sssss)	Apollo Series 91B and 91C-QT (1/2 - 2")
(ttttt)	Apollo Series 91BLF and 91CLF-QT (1/2 - 2")
(uuuuu)	Apollo Model 77B-LFU and 77C-LFU Union Ball Valves - QT (1/2")
(vvvvv)	Apollo Series 91BLF-U and 91CLF-U-QT (3/4"-2")
(wwwww)	Apollo Series 91B-U and 91C-U-QT (3/4"-2")
(xxxxx)	Apollo Model GV (FXG) - NRS (2-1/2" - 10")
(yyyyy)	Apollo Model GV (GXG) - NRS (2-1/2" - 10")
(zzzzz)	Apollo Model GV (FXG) - OSY (2-1/2" - 10")
(aaaaaa)	Apollo Model GV (GXG) - OSY (2-1/2" - 10")
(bbbbbb)	Apollo Model GV (FXF) - NRS (2-1/2" - 10")
(cccccc)	Apollo Model GV (FXF) - OSY (2-1/2" - 10")

Detector Assembly Meters

The Double Check Detector Assemblies (DCDA) and Reduced Pressure Principle Detector Assemblies (RPDA) contained herein have been evaluated with a specific meter as the detector element of the assembly. That specific meter is coded by a parenthetic letter shown in the "meters" column. The coding of meters is shown in this Section. Other meters having similar performance characteristics to permit the assembly to meet the Specifications are shown immediately after the original evaluation meter. The use of any other meter or modified bypass piping invalidates the Approval.

Some of the DCDA's and RPDA's utilize a line-size assembly, which is not a standard or stock Approved assembly. Increased loads are required in these line-size units to allow the assembly to accurately record low flow rates in the bypass meter. Therefore, various 'off the shelf' components can not be assembled and expected to perform satisfactorily. The bypass backflow preventer Approved with the detector assembly is listed under the "bypass" column. This is only for verification purposes. Should replacement parts or a complete by-pass be needed the model number of the complete detector assembly should be used in ordering these components.

A Hersey Model F-F 5/8" x 3/4"
B Carlon 5/8" x 3/4"
C Dandé Model D-3 5/8" x 3/4"
D Gamon-Calmet 5/8"
E Hays Acumeter 5/8" x 3/4"
F Arad 5/8" x 3/4" (Master Meter)
G Schlumberger 5/8" x 3/4" Model MBRF
H Rockwell (Sensus) SR-II 5/8" x 3/4"
I Hersey Model 430 - 5/8"
J Elster AMCO Model C700 5/8"x3/4" (Formerly Kent, ABB)
K Precision 5/8"
L Neptune Trident 8 5/8"
M Neptune T-10 5/8"(Lead free compliant version identified with NSF61 mark on meter)
N Badger Model 25 3/4"
O Badger 5/8" x 3/4" Model 25 (Lead free compliant version identified with NSF61 mark on meter)
P Hersey Model 430 Series II 5/8"
Q Hersey Model MVR-30 3/4"
R Neptune T-10 1"
S Neptune T-10 1 1/2"

Manufacturers of Approved Backflow Prevention Assemblies

Ames Fire & Waterworks - A Watts Water Technologies Company
http://www.amesfirewater.com/
1427 N. Market Blvd., Ste. 9
Sacramento, CA 95834
(916) 928-0123

Apollo/Conbraco Industries, Inc.
http://www.apollovalves.com/
P. O. Box 247
Matthews, NC 28105
(704) 847-9191

A.R.I. FLOW CONTROL ACCESSORIES
http://www.arivalves.com
Kibbutz Kfar Charuv
M.P. South Golan
ISRAEL, 12932
972-4-6761800 or 972-4-6761988

Arrowhead Brass
http://www.arrowheadbrass.com/
5147 Alhambra Ave.
Los Angeles, CA 90032
(323) 343-9790

Cash Acme
http://www.cashacme.com
2400 7th Avenue S.W.
Cullman, Alabama 35055
(256) 775-8200

Cla-Val Company
http://www.cla-val.com/
P. O. Box 1325
Newport Beach, CA 92659-0325
(949) 722-4800

Backflow Direct
www.backflowdirect.com
3290 Monier Circle, Ste. 300
Rancho Cordova, CA 95742
(916) 760-4524

FEBCO - A Watts Water Technologies Company
http://www.febcoonline.com
P. O. Box 8070
Fresno, CA 93747
(559) 252-0791

Flomatic
http://www.flomatic.com/
15 Pruyn's Island Dr.
Glen Falls, NY 12801-4424
(800) 833-2040

Hersey Meters
http://www.herseymeters.com/
10210 Statesville Blvd.
Cleveland, NC 27013
(800) 323-8584

Watts - A Watts Water Technologies Company
http://www.wattsreg.com/
815 Chestnut Street
North Andover, MA 01845
(978) 688-1811

Wilkins Regulator Company
http://www.zurn.com/operations/wilkins/pages/home.asp
1747 Commerce Way
Paso Robles, CA 93446
(800) 817-8177

Type	Manufacturer	Model	Size	Orientation(s)	Approved	Renewed	<0.25% Pb	Manual	Shutoffs	Spare Parts	Bypass
AVB	Ames	A100	3/4	VUH	1-Nov-1991	1-Nov-2015	N	8		N	
AVB	Ames	A100	1	VUH	1-Nov-1991	1-Nov-2015	N	8		N	
AVB	Ames	A100	1 1/2	VUH	27-Sep-1991	27-Sep-2015	N	8		N	
AVB	Ames	A100	2	VUH	21-Aug-1991	21-Aug-2015	N	8		N	
AVB	Watts	288AM3	1 1/4	VUH	12-Aug-1991	12-Aug-2015	N	8		N	
AVB	Watts	288AM3	1 1/2	VUH	27-Sep-1991	27-Sep-2015	N	8		N	
AVB	Watts	288AM3	2	VUH	21-Aug-1991	21-Aug-2015	N	8		N	
AVB	Watts	288AM3	2 1/2	VUH	10-Sep-1991	10-Sep-2015	N	8		N	
AVB	Watts	288AM3	3	VUH	16-Sep-1991	16-Sep-2015	N	8		N	
AVB	Watts	288AM5	3/4	VUH	1-Nov-1991	1-Nov-2015	N	8		N	
AVB	Watts	288AM5	1	VUH	1-Nov-1991	1-Nov-2015	N	8		N	
DC	Ames	2000-DC	10	H	4-Aug-1987	2-Aug-2014	N	7	tt,ee,ff,gg,hh,ll,mm,oo,pp,uu,ccc,ddd,ffff,gggg	Y	
DC	Ames	2000-DCA	4	H	11-Jan-1988	11-Jan-2015	N	7	tt,ee,ff,gg,hh,ll,mm,oo,pp,uu,ccc,ddd,ffff,gggg	Y	
DC	Ames	2000-DCA	6	H	11-Jan-1988	11-Jan-2015	N	7	tt,ee,ff,gg,hh,ll,mm,oo,pp,uu,ccc,ddd,ffff,gggg	Y	
DC	Ames	2000-DCA	8	H	11-Jan-1988	11-Jan-2015	N	7	tt,ee,ff,gg,hh,ll,mm,oo,pp,uu,ccc,ddd,ffff,gggg	Y	
DC	Ames	2000-G-DC	10	H	4-Aug-1987	4-Aug-2014	N	7	tt,ee,ff,gg,hh,ll,mm,oo,pp,uu,ccc,ddd,ffff,gggg	Y	
DC	Ames	2000-G-DCA	4	H	11-Jan-1988	11-Jan-2015	N	7	tt,ee,ff,gg,hh,ll,mm,oo,pp,uu,ccc,ddd,ffff,gggg	Y	
DC	Ames	2000-G-DCA	6	H	11-Jan-1988	11-Jan-2015	N	7	tt,ee,ff,gg,hh,ll,mm,oo,pp,uu,ccc,ddd,ffff,gggg	Y	
DC	Ames	2000-G-DCA	8	H	11-Jan-1988	11-Jan-2015	N	7	tt,ee,ff,gg,hh,ll,mm,oo,pp,uu,ccc,ddd,ffff,gggg	Y	
DC	Ames	2000B	1/2	H	6-Dec-1983	6-Dec-2013	N	8	(vv),xx,ooo,hhhh,pppp,rrrrr	N	
DC	Ames	2000B	1/2	H	16-Jun-1997	16-Jun-2015	N	9	(vv),xx,ooo,hhhh,pppp,rrrrr	N	
DC	Ames	2000B	1/2	VU	16-Jun-1997	16-Jun-2015	N	9	(vv),xx,ooo,hhhh,pppp,rrrrr	N	
DC	Ames	2000B	3/4	H	5-Apr-1993	5-Apr-2014	N	8	(vv),xx,ooo,hhhh,pppp,rrrrr	N	
DC	Ames	2000B	3/4	VU	27-Aug-1996	27-Aug-2014	N	8	(vv),xx,ooo,hhhh,pppp,rrrrr	N	
DC	Ames	2000B	1	H	18-May-1998	18-May-2013	N	9	(vv),xx,ooo,hhhh,pppp,rrrrr	N	
DC	Ames	2000B	1	H	26-Feb-1991	26-Feb-2015	N	8	(vv),xx,ooo,hhhh,pppp,rrrrr	N	
DC	Ames	2000B	1	VU	18-May-1998	18-May-2013	N	9	(vv),xx,ooo,hhhh,pppp,rrrrr	N	
DC	Ames	2000B	1 1/4	H	1-Oct-1996	1-Oct-2014	N	8	(vv),xx,ooo,hhhh,pppp,rrrrr	N	
DC	Ames	2000B	1 1/4	VU	1-Oct-1996	1-Oct-2014	N	8	(vv),xx,ooo,hhhh,pppp,rrrrr	N	
DC	Ames	2000B	1 1/2	H	24-May-1994	24-May-2015	N	8	(vv),xx,ooo,hhhh,pppp,rrrrr	N	
DC	Ames	2000B	1 1/2	VU	11-Mar-1996	11-Mar-2014	N	8	(vv),xx,ooo,hhhh,pppp,rrrrr	N	
DC	Ames	2000B	2	H	30-Jun-1992	30-Jun-2013	N	8	(vv),xx,ooo,hhhh,pppp,rrrrr	N	
DC	Ames	2000B	2	VU	8-Mar-1996	8-Mar-2014	N	8	(vv),xx,ooo,hhhh,pppp,rrrrr	N	
DC	Ames	2000B-FP	3/4	H	1-Sep-2009	1-Sep-2015	N	9	(eeeee)	N	
DC	Ames	2000B-FP	1	H	1-Sep-2009	1-Sep-2015	N	9	(eeeee)	N	
DC	Ames	2000B-FP	1 1/4	H	1-Sep-2009	1-Sep-2015	N	9	(eeeee)	N	
DC	Ames	2000B-FP	1 1/2	H	1-Sep-2009	1-Sep-2015	N	9	(eeeee)	N	
DC	Ames	2000B-FP	2	H	1-Sep-2009	1-Sep-2015	N	9	(eeeee)	N	
DC	Ames	2000BM3	3/4	H	27-Mar-2000	27-Mar-2015	N	9	(vv),xx,ooo,hhhh,pppp,rrrrr	N	
DC	Ames	2000BM3	3/4	VU	27-Mar-2000	27-Mar-2015	N	9	(vv),xx,ooo,hhhh,pppp,rrrrr	N	
DC	Ames	2000BM3-FP	3/4	H	1-Sep-2009	1-Sep-2015	N	9	(eeeee)	N	
DC	Ames	2000CIV	4	H	15-Jan-1982	15-Jan-2015	N	6	(oo),gg,hh,ll,mm,pp,tt,uu,eee	N	
DC	Ames	2000CIV	4	VU	11-Mar-1996	11-Mar-2014	N	8	(oo),gg,hh,ll,mm,pp,tt,uu,eee	N	
DC	Ames	2000CIV	6	H	18-May-1982	18-May-2015	N	6	(oo),gg,hh,ll,mm,pp,tt,uu,eee	N	
DC	Ames	2000CIV	6	VU	5-Dec-1996	5-Dec-2014	N	8	(oo),gg,hh,ll,mm,pp,tt,uu,eee	N	
DC	Ames	2000CIV	8	H	6-Jul-1981	6-Jul-2014	N	6	(oo),gg,hh,ll,mm,pp,tt,uu,eee	N	
DC	Ames	2000CIV	8	VU	5-Dec-1996	5-Dec-2014	N	8	(oo),gg,hh,ll,mm,pp,tt,uu,eee	N	
DC	Ames	2000CIV	10	H	16-Mar-1983	16-Mar-2016	N	6	(oo),gg,hh,ll,mm,pp,tt,uu,eee	N	
DC	Ames	2000CIV	10	VU	5-Dec-1996	5-Dec-2014	N	8	(oo),gg,hh,ll,mm,pp,tt,uu,eee	N	
DC	Ames	2000SE	2 1/2	H	10-Sep-1996	10-Sep-2014	N	8	(mm),ee,ff,gg,hh,ll,mm,oo,pp,tt,uu,ccc,ddd,ffff,gggg	N	
DC	Ames	2000SE	6	H	22-Nov-1993	22-Nov-2014	N	8	tt,ee,ff,gg,hh,ll,mm,oo,pp,uu,ccc,ddd,ffff,gggg	Y	
DC	Ames	2000SE	8	H	9-Sep-1992	9-Sep-2013	N	8	tt,ee,ff,gg,hh,ll,mm,oo,pp,uu,ccc,ddd,ffff,gggg	Y	
DC	Ames	2000SS	3/4	H	5-May-1995	5-May-2013	N	8	ii	Y	
DC	Ames	2000SS	1	H	5-May-1995	5-May-2013	N	8	ii	Y	
DC	Ames	2000SS	1 1/4	H	14-Jul-1995	14-Jul-2013	N	8	ii	Y	
DC	Ames	2000SS	1 1/2	H	13-Oct-1995	13-Oct-2013	N	8	ii	Y	
DC	Ames	2000SS	2	H	13-Oct-1995	13-Oct-2013	N	8	ii	Y	
DC	Ames	2000SS	2 1/2	H	11-Jul-1991	11-Jul-2015	N	8	(tt),ee,ff,gg,hh,pp,uu,ccc,ddd	N	
DC	Ames	2000SS	2 1/2	H	11-Jul-1991	11-Jul-2015	Y	8	ll,mm,oo,ffff,gggg	N	
DC	Ames	2000SS	3	H	11-Jul-1991	11-Jul-2015	N	8	(tt),ee,ff,gg,hh,pp,uu,ccc,ddd	N	
DC	Ames	2000SS	3	H	11-Jul-1991	11-Jul-2015	Y	8	ll,mm,oo,ffff,gggg	N	
DC	Ames	2000SS	4	H	11-Jul-1991	11-Jul-2015	N	8	(tt),ee,ff,gg,hh,pp,uu,ccc,ddd	N	
DC	Ames	2000SS	4	H	11-Jul-1991	11-Jul-2015	Y	8	ll,mm,oo,ffff,gggg	N	
DC	Ames	2000SS	6	H	9-Sep-1992	9-Sep-2013	N	8	(tt),ee,ff,gg,hh,pp,uu,ccc,ddd	N	
DC	Ames	2000SS	6	H	9-Sep-1992	9-Sep-2013	Y	8	ll,mm,oo,ffff,gggg	N	
DC	Ames	2000SS	8	H	16-Sep-1996	16-Sep-2014	N	8	(tt),ee,ff,gg,hh,pp,uu,ccc,ddd	N	
DC	Ames	2000SS	8	H	16-Sep-1996	16-Sep-2014	Y	8	ll,mm,oo,ffff,gggg	N	
DC	Ames	2000SS	10	H	16-Feb-2001	16-Feb-2016	N	8	pp,	N	
DC	Ames	2000SS	10	H	16-Feb-2001	16-Feb-2016	Y	8	(ll),mm,oo	N	
DC	Ames	2000SS	12	H	22-Jul-2009	22-Jul-2015	N	9	pp,	N	
DC	Ames	2000SS	12	H	22-Jul-2009	22-Jul-2015	Y	9	(ll),mm,oo	N	
DC	Ames	2000SS	12	VU	22-Feb-2011	22-Feb-2014	N	9	pp,	N	
DC	Ames	2000SS	12	VU	22-Feb-2011	22-Feb-2014	Y	9	(ll),mm,oo	N	
DC	Ames	2000SS-M	4	H	5-May-1995	5-May-2013	N	8	(tt),ee,ff,gg,hh,ll,mm,oo,pp,uu,ccc,ddd,ffff,gggg	N	
DC	Ames	2000SS-M	6	H	5-May-1995	5-May-2013	N	8	(tt),ee,ff,gg,hh,ll,mm,oo,pp,uu,ccc,ddd,ffff,gggg	N	
DC	Ames	200B	1/2	H	21-Apr-2006	21-Apr-2015	N	9	(vv),xx,ooo,hhhh,pppp,rrrrr	N	
DC	Ames	200B	1/2	VD	21-Apr-2006	21-Apr-2015	N	9	(vv),xx,ooo,hhhh,pppp,rrrrr	N	
DC	Ames	200B	1/2	VU	21-Apr-2006	21-Apr-2015	N	9	(vv),xx,ooo,hhhh,pppp,rrrrr	N	
DC	Ames	200B	3/4	H	21-Apr-2006	21-Apr-2015	N	9	(vv),xx,ooo,hhhh,pppp,rrrrr	N	
DC	Ames	200B	3/4	VD	21-Apr-2006	21-Apr-2015	N	9	(vv),xx,ooo,hhhh,pppp,rrrrr	N	
DC	Ames	200B	3/4	VU	21-Apr-2006	21-Apr-2015	N	9	(vv),xx,ooo,hhhh,pppp,rrrrr	N	
DC	Ames	200B	1	H	21-Apr-2006	21-Apr-2015	N	9	(vv),xx,ooo,hhhh,pppp,rrrrr	N	
DC	Ames	200B	1	VD	21-Apr-2006	21-Apr-2015	N	9	(vv),xx,ooo,hhhh,pppp,rrrrr	N	
DC	Ames	200B	1	VU	21-Apr-2006	21-Apr-2015	N	9	(vv),xx,ooo,hhhh,pppp,rrrrr	N	
DC	Ames	200B	1 1/4	H	21-Apr-2006	21-Apr-2015	N	9	(vv),xx,ooo,hhhh,pppp,rrrrr	N	
DC	Ames	200B	1 1/4	VD	21-Apr-2006	21-Apr-2015	N	9	(vv),xx,ooo,hhhh,pppp,rrrrr	N	
DC	Ames	200B	1 1/4	VU	21-Apr-2006	21-Apr-2015	N	9	(vv),xx,ooo,hhhh,pppp,rrrrr	N	
DC	Ames	200B	1 1/2	H	21-Apr-2006	21-Apr-2015	N	9	(vv),xx,ooo,hhhh,pppp,rrrrr	N	
DC	Ames	200B	1 1/2	VD	21-Apr-2006	21-Apr-2015	N	9	(vv),xx,ooo,hhhh,pppp,rrrrr	N	
DC	Ames	200B	1 1/2	VU	21-Apr-2006	21-Apr-2015	N	9	(vv),xx,ooo,hhhh,pppp,rrrrr	N	
DC	Ames	200B	2	H	21-Apr-2006	21-Apr-2015	N	9	(vv),xx,ooo,hhhh,pppp,rrrrr	N	
DC	Ames	200B	2	VD	21-Apr-2006	21-Apr-2015	N	9	(vv),xx,ooo,hhhh,pppp,rrrrr	N	
DC	Ames	200B	2	VU	21-Apr-2006	21-Apr-2015	N	9	(vv),xx,ooo,hhhh,pppp,rrrrr	N	
DC	Ames	200B R10	1/2	H	21-Apr-2006	21-Apr-2015	N	9	(vv),xx,ooo,hhhh,pppp,rrrrr	N	
DC	Ames	200B R10	1/2	VD	21-Apr-2006	21-Apr-2015	N	9	(vv),xx,ooo,hhhh,pppp,rrrrr	N	
DC	Ames	200B R10	1/2	VU	21-Apr-2006	21-Apr-2015	N	9	(vv),xx,ooo,hhhh,pppp,rrrrr	N	
DC	Ames	200B R10	3/4	H	21-Apr-2006	21-Apr-2015	N	9	(vv),xx,ooo,hhhh,pppp,rrrrr	N	
DC	Ames	200B R10	3/4	VD	21-Apr-2006	21-Apr-2015	N	9	(vv),xx,ooo,hhhh,pppp,rrrrr	N	
DC	Ames	200B R10	3/4	VU	21-Apr-2006	21-Apr-2015	N	9	(vv),xx,ooo,hhhh,pppp,rrrrr	N	
DC	Ames	200B-A	1/2	VUVD	21-Apr-2006	21-Apr-2015	N	9	(vv),xx,ooo,hhhh,pppp,rrrrr	N	
DC	Ames	200B-A	1	VUVD	21-Apr-2006	21-Apr-2015	N	9	(vv),xx,ooo,hhhh,pppp,rrrrr	N	
DC	Ames	200B-A	1 1/4	VUVD	21-Apr-2006	21-Apr-2015	N	9	(vv),xx,ooo,hhhh,pppp,rrrrr	N	
DC	Ames	200B-A	1 1/2	VUVD	21-Apr-2006	21-Apr-2015	N	9	(vv),xx,ooo,hhhh,pppp,rrrrr	N	
DC	Ames	200B-A	2	VUVD	21-Apr-2006	21-Apr-2015	N	9	(vv),xx,ooo,hhhh,pppp,rrrrr	N	
DC	Ames	200B-AR10	1/2	VUVD	3-Jul-2013		N	9	(vv),xx,ooo,hhhh,pppp,rrrrr	N	
DC	Ames	200B-AR10	3/4	VUVD	3-Jul-2013		N	9	(vv),xx,ooo,hhhh,pppp,rrrrr	N	
DC	Ames	Colt 200	2 1/2	H	20-Jul-2004	20-Jul-2013	N	9	(ppp),qqq,nnnnn	N	
DC	Ames	Colt 200	2 1/2	H	20-Jul-2004	20-Jul-2013	Y	9	yyy,zzz,dddd,eeee,dddd,gggg,kkkk,llll,mmmm,nnnn	N	
DC	Ames	Colt 200	2 1/2	VU	20-Jul-2004	20-Jul-2013	N	9	(ppp),qqq,nnnnn	N	
DC	Ames	Colt 200	2 1/2	VU	20-Jul-2004	20-Jul-2013	Y	9	yyy,zzz,dddd,eeee,dddd,gggg,kkkk,llll,mmmm,nnnn	N	
DC	Ames	Colt 200	3	H	20-Jul-2004	20-Jul-2013	N	9	(ppp),qqq,nnnnn	N	
DC	Ames	Colt 200	3	H	20-Jul-2004	20-Jul-2013	Y	9	yyy,zzz,dddd,eeee,dddd,gggg,kkkk,llll,mmmm,nnnn	N	
DC	Ames	Colt 200	3	VU	20-Jul-2004	20-Jul-2013	N	9	(ppp),qqq,nnnnn	N	
DC	Ames	Colt 200	3	VU	20-Jul-2004	20-Jul-2013	Y	9	yyy,zzz,dddd,eeee,dddd,gggg,kkkk,llll,mmmm,nnnn	N	
DC	Ames	Colt 200	4	H	20-Jul-2004	20-Jul-2013	N	9	(ppp),qqq,nnnnn	N	
DC	Ames	Colt 200	4	H	20-Jul-2004	20-Jul-2013	Y	9	yyy,zzz,dddd,eeee,dddd,gggg,kkkk,llll,mmmm,nnnn	N	
DC	Ames	Colt 200	4	VU	20-Jul-2004	20-Jul-2013	N	9	(ppp),qqq,nnnnn	N	
DC	Ames	Colt 200	4	VU	20-Jul-2004	20-Jul-2013	Y	9	yyy,zzz,dddd,eeee,dddd,gggg,kkkk,llll,mmmm,nnnn	N	
DC	Ames	Colt 200	6	H	21-Apr-2006	21-Apr-2015	N	9	(ppp),qqq,aaaa,bbbb,nnnnn	N	
DC	Ames	Colt 200	6	H	21-Apr-2006	21-Apr-2015	Y	9	yyy,zzz,dddd,eeee,ffff,gggg,kkkk,llll,mmmm,nnnn	N	
DC	Ames	Colt 200	6	VU	21-Apr-2006	21-Apr-2015	N	9	(ppp),qqq,aaaa,bbbb,nnnnn	N	
DC	Ames	Colt 200	6	VU	21-Apr-2006	21-Apr-2015	Y	9	yyy,zzz,dddd,eeee,ffff,gggg,kkkk,llll,mmmm,nnnn	N	
DC	Ames	Colt 200	8	H	11-Aug-2004	11-Aug-2013	N	9	ppp,qqq,aaaa,bbbb,nnnnn	N	
DC	Ames	Colt 200	8	H	11-Aug-2004	11-Aug-2013	Y	9	(yyy),zzz,dddd,eeee,gggg,kkkk,llll,mmmm,nnnn	N	
DC	Ames	Colt 200	8	VU	10-Feb-2006	10-Feb-2015	N	9	ppp,qqq,aaaa,bbbb,nnnnn	N	

Type	Manufacturer	Model	Size	Orientation(s)	Approved	Renewed	≤0.25% Pb	Manual	Shutoffs	Spare Parts	Bypass
DC	Ames	Colt 200	8	VU	10-Feb-2006	10-Feb-2015	Y	9	(yyy),zzz,dddd,eeee,gggg,kkkk,llll,mmmm,nnnn	N	
DC	Ames	Colt 200	10	H	2-May-2008	2-May-2014	N	9	ppp,qqq,aaaa,bbbb	N	
DC	Ames	Colt 200	10	H	2-May-2008	2-May-2014	Y	9	yyy,zzz,dddd,eeee,ggg,kkkk,llll,mmmm,nnnn	N	
DC	Ames	Colt 200	10	VU	2-May-2008	2-May-2014	N	9	(ppp),qqq,aaaa,bbbb	N	
DC	Ames	Colt 200	10	VU	5-Dec-2014		Y	9	yyy,zzz,dddd,eeee,ggg,kkkk,llll,mmmm,nnnn	N	
DC	Ames	Colt 200a	2 1/2	H	7-Oct-2002	7-Oct-2014	N	9	(ppp),fff,qqq,yyy,zzz,aaaa,bbbb,dddd,eeee,gggg,kkkk,llll,mmmm,nnnn,nnnnn	N	
DC	Ames	Colt 200a	2 1/2	VU	7-Oct-2002	7-Oct-2014	N	9	(ppp),qqq,yyy,zzz,aaaa,bbbb,dddd,eeee,ffff,gggg,kkkk,llll,mmmm,nnnn,nnnnn	N	
DC	Ames	Colt 200a	3	H	7-Oct-2002	7-Oct-2014	N	9	(ppp),qqq,yyy,zzz,aaaa,bbbb,dddd,eeee,ffff,gggg,kkkk,llll,mmmm,nnnn,nnnnn	N	
DC	Ames	Colt 200a	3	VU	7-Oct-2002	7-Oct-2014	N	9	(ppp),qqq,yyy,zzz,aaaa,bbbb,dddd,eeee,ffff,gggg,kkkk,llll,mmmm,nnnn,nnnnn	N	
DC	Ames	Colt 200a	4	H	7-Oct-2002	7-Oct-2014	N	9	(ppp),qqq,yyy,zzz,aaaa,bbbb,dddd,eeee,ffff,gggg,kkkk,llll,mmmm,nnnn,nnnnn	N	
DC	Ames	Colt 200a	4	VU	7-Oct-2002	7-Oct-2014	N	9	(ppp),qqq,yyy,zzz,aaaa,bbbb,dddd,eeee,ffff,gggg,kkkk,llll,mmmm,nnnn,nnnnn	N	
DC	Ames	Colt 200a	6	H	3-Jul-2003	3-Jul-2015	N	9	(ppp),qqq,yyy,zzz,aaaa,bbbb,dddd,eeee,ffff,gggg,kkkk,llll,mmmm,nnnn,nnnnn	N	
DC	Ames	Colt 200a	6	VU	3-Jul-2003	3-Jul-2015	N	9	(ppp),qqq,yyy,zzz,aaaa,bbbb,dddd,eeee,ffff,gggg,kkkk,llll,mmmm,nnnn,nnnnn	N	
DC	Ames	Colt 200N	2 1/2	VUVD	7-Apr-2009	7-Apr-2015	N	9	(ppp),qqq,nnnnn	N	
DC	Ames	Colt 200N	2 1/2	VUVD	7-Apr-2009	7-Apr-2015	Y	9	yyy,zzz,dddd,eeee,dddd,gggg,kkkk,llll,mmmm,nnnn	N	
DC	Ames	Colt 200N	3	VUVD	7-Apr-2009	7-Apr-2015	N	9	(ppp),qqq,nnnnn	N	
DC	Ames	Colt 200N	3	VUVD	7-Apr-2009	7-Apr-2015	Y	9	yyy,zzz,dddd,eeee,dddd,gggg,kkkk,llll,mmmm,nnnn	N	
DC	Ames	Colt 200N	4	VUVD	7-Apr-2009	7-Apr-2015	N	9	(ppp),qqq,nnnnn	N	
DC	Ames	Colt 200N	4	VUVD	7-Apr-2009	7-Apr-2015	Y	9	yyy,zzz,dddd,eeee,dddd,gggg,kkkk,llll,mmmm,nnnn	N	
DC	Ames	Colt 200N	6	VUVD	7-Apr-2009	7-Apr-2015	N	9	(ppp),qqq,nnnnn	N	
DC	Ames	Colt 200N	6	VUVD	7-Apr-2009	7-Apr-2015	Y	9	yyy,zzz,dddd,eeee,dddd,gggg,kkkk,llll,mmmm,nnnn	N	
DC	Ames	Colt 200N	8	VUVD	3-Jan-2013	3-Jan-2016	N	9	ppp,qqq,aaaa,bbbb	N	
DC	Ames	Colt 200N	8	VUVD	3-Jan-2013	3-Jan-2016	Y	9	yyy, zzz,dddd,eeee,gggg,kkkk,llll,mmmm,nnnn	N	
DC	Ames	Colt 200N	10	VUVD	1-Sep-2009	1-Sep-2015	N	9	(ppp),qqq	N	
DC	Ames	Colt 200N	10	VUVD	1-Sep-2009	1-Sep-2015	Y	9	yyy,zzz,dddd,eeee,dddd,gggg,kkkk,llll,mmmm,nnnn	N	
DC	Ames	Colt 200Na	2 1/2	VUVD	20-Mar-2003	20-Mar-2015	N	9	(ppp),qqq,yyy,zzz,aaaa,bbbb,dddd,eeee,ffff,gggg,kkkk,llll,mmmm,nnnn,nnnnn	N	
DC	Ames	Colt 200Na	3	VUVD	20-Mar-2003	20-Mar-2015	N	9	(ppp),qqq,yyy,zzz,aaaa,bbbb,dddd,eeee,ffff,gggg,kkkk,llll,mmmm,nnnn,nnnnn	N	
DC	Ames	Colt 200Na	4	VUVD	20-Mar-2003	20-Mar-2015	N	9	(ppp),qqq,yyy,zzz,aaaa,bbbb,dddd,eeee,ffff,gggg,kkkk,llll,mmmm,nnnn,nnnnn	N	
DC	Ames	Colt 200Na	6	VUVD	3-Jul-2003	3-Jul-2015	N	9	(ppp),qqq,yyy,zzz,aaaa,bbbb,dddd,eeee,ffff,gggg,kkkk,llll,mmmm,nnnn,nnnnn	N	
DC	Ames	DC	4	H	14-Jun-1985	14-Jun-2015	N	6	oo,pp,ffff,gggg	Y	
DC	Ames	DC	6	H	14-Jun-1985	14-Jun-2015	N	6	oo,pp,ffff,gggg	Y	
DC	Ames	DC	8	H	4-Aug-1987	4-Aug-2014	N	7	oo,pp,ffff,gggg	Y	
DC	Ames	DC	10								
DC	Ames	DC	10								
DC	Ames	DCA	4								
DC	Ames	DCA	4								
DC	Ames	DCA	6								
DC	Ames	DCA	6								
DC	Ames	DCA	8								
DC	Ames	DCA	8								
DC	Ames	LF2000B	1/2	H	25-Sep-2013		Y	9	(hhhh)	N	
DC	Ames	LF2000B	1/2	VU	25-Sep-2013		Y	9	(hhhh)	N	
DC	Ames	LF2000BM1	1	H	25-Sep-2013		Y	9	(hhhh)	N	
DC	Ames	LF2000BM1	1	VU	25-Sep-2013		Y	9	(hhhh)	N	
DC	Ames	LF2000BM1	2	H	25-Sep-2013		Y	9	(hhhh)	N	
DC	Ames	LF2000BM1	2	VU	25-Sep-2013		Y	9	(hhhh)	N	
DC	Ames	LF2000BM2	1 1/4	H	25-Sep-2013		Y	8	(hhhh)	N	
DC	Ames	LF2000BM2	1 1/4	VU	25-Sep-2013		Y	8	(hhhh)	N	
DC	Ames	LF2000BM2	1 1/2	H	25-Sep-2013		Y	8	(hhhh)	N	
DC	Ames	LF2000BM2	1 1/2	VU	25-Sep-2013		Y	8	(hhhh)	N	
DC	Ames	LF2000BM3	3/4	H	25-Sep-2013		Y	9	(hhhh)	N	
DC	Ames	LF2000BM3	3/4	VU	25-Sep-2013		Y	9	(hhhh)	N	
DC	Ames	LF200B	1/2	H	3-Jul-2013		Y	9	(hhhh)	N	
DC	Ames	LF200B	1/2	VD	3-Jul-2013		Y	9	(hhhh)	N	
DC	Ames	LF200B	1/2	VU	3-Jul-2013		Y	9	(hhhh)	N	
DC	Ames	LF200B	3/4	H	3-Jul-2013		Y	9	(hhhh)	N	
DC	Ames	LF200B	3/4	VD	3-Jul-2013		Y	9	(hhhh)	N	
DC	Ames	LF200B	3/4	VU	3-Jul-2013		Y	9	(hhhh)	N	
DC	Ames	LF200B	1	H	14-Jun-2006	14-Jun-2015	N	9	(vv),xx,ooo,hhhh,pppp,rrrrr	N	
DC	Ames	LF200B	1	VD	14-Jun-2006	14-Jun-2015	N	9	(vv),xx,ooo,hhhh,pppp,rrrrr	N	
DC	Ames	LF200B	1	VU	14-Jun-2006	14-Jun-2015	N	9	(vv),xx,ooo,hhhh,pppp,rrrrr	N	
DC	Ames	LF200B	1 1/4	H	14-Jun-2006	14-Jun-2015	N	9	(vv),xx,ooo,hhhh,pppp,rrrrr	N	
DC	Ames	LF200B	1 1/4	VD	14-Jun-2006	14-Jun-2015	N	9	(vv),xx,ooo,hhhh,pppp,rrrrr	N	
DC	Ames	LF200B	1 1/4	VU	14-Jun-2006	14-Jun-2015	N	9	(vv),xx,ooo,hhhh,pppp,rrrrr	N	
DC	Ames	LF200B	1 1/2	H	14-Jun-2006	14-Jun-2015	N	9	(vv),xx,ooo,hhhh,pppp,rrrrr	N	
DC	Ames	LF200B	1 1/2	VD	14-Jun-2006	14-Jun-2015	N	9	(vv),xx,ooo,hhhh,pppp,rrrrr	N	
DC	Ames	LF200B	1 1/2	VU	14-Jun-2006	14-Jun-2015	N	9	(vv),xx,ooo,hhhh,pppp,rrrrr	N	
DC	Ames	LF200B	2	H	14-Jun-2006	14-Jun-2015	N	9	(vv),xx,ooo,hhhh,pppp,rrrrr	N	
DC	Ames	LF200B	2	VD	14-Jun-2006	14-Jun-2015	N	9	(vv),xx,ooo,hhhh,pppp,rrrrr	N	
DC	Ames	LF200B	2	VU	14-Jun-2006	14-Jun-2015	N	9	(vv),xx,ooo,hhhh,pppp,rrrrr	N	
DC	Ames	LF200B R10	1/2	H	14-Jun-2006	14-Jun-2015	N	9	(vv),xx,ooo,hhhh,pppp,rrrrr	N	
DC	Ames	LF200B R10	1/2	VD	14-Jun-2006	14-Jun-2015	N	9	(vv),xx,ooo,hhhh,pppp,rrrrr	N	
DC	Ames	LF200B R10	1/2	VU	14-Jun-2006	14-Jun-2015	N	9	(vv),xx,ooo,hhhh,pppp,rrrrr	N	
DC	Ames	LF200B R10	3/4	H	14-Jun-2006	14-Jun-2015	N	9	(vv),xx,ooo,hhhh,pppp,rrrrr	N	
DC	Ames	LF200B R10	3/4	VD	14-Jun-2006	14-Jun-2015	N	9	(vv),xx,ooo,hhhh,pppp,rrrrr	N	
DC	Ames	LF200B R10	3/4	VU	14-Jun-2006	14-Jun-2015	N	9	(vv),xx,ooo,hhhh,pppp,rrrrr	N	
DC	Ames	LF200B-A	1	VUVD	14-Jun-2006	14-Jun-2015	N	9	(vv),xx,ooo,hhhh,pppp,rrrrr	N	
DC	Ames	LF200B-A	1 1/4	VUVD	14-Jun-2006	14-Jun-2015	N	9	(vv),xx,ooo,hhhh,pppp,rrrrr	N	
DC	Ames	LF200B-A	1 1/2	VUVD	14-Jun-2006	14-Jun-2015	N	9	(vv),xx,ooo,hhhh,pppp,rrrrr	N	
DC	Ames	LF200B-A	2	VUVD	14-Jun-2006	14-Jun-2015	N	9	(vv),xx,ooo,hhhh,pppp,rrrrr	N	
DC	Ames	LFU200B	1	H	14-Jun-2006	14-Jun-2015	N	9	(vv),xx,ooo,hhhh,pppp	N	
DC	Ames	LFU200B	1	VD	14-Jun-2006	14-Jun-2015	N	9	(vv),xx,ooo,hhhh,pppp	N	
DC	Ames	LFU200B	1	VU	14-Jun-2006	14-Jun-2015	N	9	(vv),xx,ooo,hhhh,pppp	N	
DC	Ames	LFU200B	1 1/4	H	14-Jun-2006	14-Jun-2015	N	9	(vv),xx,ooo,hhhh,pppp	N	
DC	Ames	LFU200B	1 1/4	VD	14-Jun-2006	14-Jun-2015	N	9	(vv),xx,ooo,hhhh,pppp	N	
DC	Ames	LFU200B	1 1/4	VU	14-Jun-2006	14-Jun-2015	N	9	(vv),xx,ooo,hhhh,pppp	N	
DC	Ames	LFU200B	1 1/2	H	14-Jun-2006	14-Jun-2015	N	9	(vv),xx,ooo,hhhh,pppp	N	
DC	Ames	LFU200B	1 1/2	VD	14-Jun-2006	14-Jun-2015	N	9	(vv),xx,ooo,hhhh,pppp	N	
DC	Ames	LFU200B	1 1/2	VU	14-Jun-2006	14-Jun-2015	N	9	(vv),xx,ooo,hhhh,pppp	N	
DC	Ames	LFU200B	2	H	14-Jun-2006	14-Jun-2015	N	9	(vv),xx,ooo,hhhh,pppp	N	
DC	Ames	LFU200B	2	VD	14-Jun-2006	14-Jun-2015	N	9	(vv),xx,ooo,hhhh,pppp	N	
DC	Ames	LFU200B	2	VU	14-Jun-2006	14-Jun-2015	N	9	(vv),xx,ooo,hhhh,pppp	N	
DC	Ames	Maxim 200	2 1/2	H	20-Jul-2004	20-Jul-2013	N	9	(ppp),qqq,nnnnn	N	
DC	Ames	Maxim 200	2 1/2	H	20-Jul-2004	20-Jul-2013	Y	9	yyy,dddd,eeee,gggg,kkkk,llll,mmmm,nnnn	N	
DC	Ames	Maxim 200	2 1/2	VU	20-Jul-2004	20-Jul-2013	N	9	(ppp),qqq,nnnnn	N	
DC	Ames	Maxim 200	2 1/2	VU	20-Jul-2004	20-Jul-2013	Y	9	yyy,dddd,eeee,gggg,kkkk,llll,mmmm,nnnn	N	
DC	Ames	Maxim 200	3	H	20-Jul-2004	20-Jul-2013	N	9	(ppp),qqq,nnnnn	N	
DC	Ames	Maxim 200	3	H	20-Jul-2004	20-Jul-2013	Y	9	yyy,dddd,eeee,gggg,kkkk,llll,mmmm,nnnn	N	
DC	Ames	Maxim 200	3	VU	20-Jul-2004	20-Jul-2013	N	9	(ppp),qqq,nnnnn	N	
DC	Ames	Maxim 200	3	VU	20-Jul-2004	20-Jul-2013	Y	9	yyy,dddd,eeee,gggg,kkkk,llll,mmmm,nnnn	N	
DC	Ames	Maxim 200	4	H	21-Apr-2006	21-Apr-2015	N	9	(ppp),qqq,aaaa,bbbb,nnnnn	N	
DC	Ames	Maxim 200	4	H	21-Apr-2006	21-Apr-2015	Y	9	yyy,zzz,dddd,eeee,gggg,kkkk,llll,mmmm,nnnn	N	
DC	Ames	Maxim 200	4	VU	21-Apr-2006	21-Apr-2015	N	9	(ppp),qqq,aaaa,bbbb,nnnnn	N	
DC	Ames	Maxim 200	4	VU	21-Apr-2006	21-Apr-2015	Y	9	yyy,zzz,dddd,eeee,gggg,kkkk,llll,mmmm,nnnn	N	
DC	Ames	Maxim 200	6	H	11-Aug-2004	11-Aug-2013	N	9	ppp,qqq,aaaa,bbbb,nnnnn	N	
DC	Ames	Maxim 200	6	H	11-Aug-2004	11-Aug-2013	Y	9	(yyy),zzz,dddd,eeee,gggg,kkkk,llll,mmmm,nnnn	N	
DC	Ames	Maxim 200	6	VU	10-Feb-2006	10-Feb-2015	N	9	ppp,qqq,aaaa,bbbb,nnnnn	N	
DC	Ames	Maxim 200	6	VU	10-Feb-2006	10-Feb-2015	Y	9	(yyy),zzz,dddd,eeee,gggg,kkkk,llll,mmmm,nnnn	N	
DC	Ames	Maxim 200	8	H	2-May-2008	2-May-2014	N	9	ppp,qqq,aaaa,bbbb,nnnnn	N	
DC	Ames	Maxim 200	8	H	2-May-2008	2-May-2014	Y	9	(yyy),zzz,dddd,eeee,gggg	N	
DC	Ames	Maxim 200	8	VU	2-May-2008	2-May-2014	N	9	ppp,qqq,aaaa,bbbb,nnnnn	N	
DC	Ames	Maxim 200	8	VU	2-May-2008	2-May-2014	Y	9	(yyy),zzz,dddd,eeee,gggg	N	
DC	Ames	Maxim 200	10	H	20-Oct-2008	20-Oct-2014	N	9	(ppp),qqq,aaaa,bbbb	N	
DC	Ames	Maxim 200	10	H	20-Oct-2008	20-Oct-2014	Y	9	yyy,zzz,dddd,eeee,gggg	N	
DC	Ames	Maxim 200	10	VU	20-Oct-2008	20-Oct-2014	N	9	(ppp),qqq,aaaa,bbbb	N	
DC	Ames	Maxim 200	10	VU	20-Oct-2008	20-Oct-2014	Y	9	yyy,zzz,dddd,eeee,gggg	N	
DC	Ames	Maxim 200a	2 1/2	H	7-Oct-2002	7-Oct-2014	N	9	(yyy),ppp,qqq,zzz,aaaa,bbbb,dddd,eeee,gggg,nnnnn	N	
DC	Ames	Maxim 200a	2 1/2	VU	7-Oct-2002	7-Oct-2014	N	9	(yyy),ppp,qqq,zzz,aaaa,bbbb,dddd,eeee,gggg,nnnnn	N	
DC	Ames	Maxim 200a	3	H	7-Oct-2002	7-Oct-2014	N	9	(yyy),ppp,qqq,zzz,aaaa,bbbb,dddd,eeee,gggg,nnnnn	N	
DC	Ames	Maxim 200a	3	VU	7-Oct-2002	7-Oct-2014	N	9	(yyy),ppp,qqq,zzz,aaaa,bbbb,dddd,eeee,gggg,nnnnn	N	
DC	Ames	Maxim 200a	4	H	3-Jul-2003	3-Jul-2015	N	9	(yyy),ppp,qqq,zzz,aaaa,bbbb,dddd,eeee,gggg,nnnnn	N	
DC	Ames	Maxim 200a	4	VU	3-Jul-2003	3-Jul-2015	N	9	(yyy),ppp,qqq,zzz,aaaa,bbbb,dddd,eeee,gggg,nnnnn	N	
DC	Ames	Maxim 200N	2 1/2	VUVD	7-Apr-2009	7-Apr-2015	N	9	(ppp),qqq,nnnnn	N	
DC	Ames	Maxim 200N	2 1/2	VUVD	7-Apr-2009	7-Apr-2015	Y	9	yyy,zzz,dddd,eeee,dddd,gggg,kkkk,llll,mmmm,nnnn	N	
DC	Ames	Maxim 200N	3	VUVD	7-Apr-2009	7-Apr-2015	N	9	(ppp),qqq,nnnnn	N	

Type	Manufacturer	Model	Size	Orientation(s)	Approved	Renewed	≤0.25% Pb	Manual	Shutoffs	Spare Parts	Bypass
DC	Ames	Maxim 200N	3	VUVD	7-Apr-2009	7-Apr-2015	Y	9	yyy,zzz,dddd,eeee,dddd,gggg,kkkk,llll,mmmm,nnnn	N	
DC	Ames	Maxim 200N	4	VUVD	7-Apr-2009	7-Apr-2015	N	9	(ppp),qqq,nnnnn	N	
DC	Ames	Maxim 200N	4	VUVD	7-Apr-2009	7-Apr-2015	Y	9	yyy,zzz,dddd,eeee,dddd,gggg,kkkk,llll,mmmm,nnnn	N	
DC	Ames	Maxim 200N	6	VUVD	3-Jan-2013	3-Jan-2016	N	9	ppp,qqq,aaaa,bbbb	N	
DC	Ames	Maxim 200N	6	VUVD	3-Jan-2013	3-Jan-2016	Y	9	yyy,zzz,dddd,eeee,gggg,kkkk,llll,mmmm,nnnn	N	
AVB	Watts	288AM5	3/4	VUH	1-Nov-1991	1-Nov-2015	N	8		N	
AVB	Watts	288AM5	1	VUH	1-Nov-1991	1-Nov-2015	N	8		N	
DC	Ames	2000-DC	10	H	4-Aug-1987	2-Aug-2014	N	7	tt,ee,ff,gg,hh,ll,mm,oo,pp,uu,ccc,ddd,ffff,gggg	Y	
DC	Ames	2000-DCA	4	H	11-Jan-1988	11-Jan-2015	N	7	tt,ee,ff,gg,hh,ll,mm,oo,pp,uu,ccc,ddd,ffff,gggg	Y	
DC	Ames	2000-DCA	6	H	11-Jan-1988	11-Jan-2015	N	7	tt,ee,ff,gg,hh,ll,mm,oo,pp,uu,ccc,ddd,ffff,gggg	Y	
DC	Ames	2000-DCA	8	H	11-Jan-1988	11-Jan-2015	N	7	tt,ee,ff,gg,hh,ll,mm,oo,pp,uu,ccc,ddd,ffff,gggg	Y	
DC	Ames	2000-G-DC	10	H	4-Aug-1987	4-Aug-2014	N	7	tt,ee,ff,gg,hh,ll,mm,oo,pp,uu,ccc,ddd,ffff,gggg	Y	
DC	Ames	2000-G-DCA	4	H	11-Jan-1988	11-Jan-2015	N	7	tt,ee,ff,gg,hh,ll,mm,oo,pp,uu,ccc,ddd,ffff,gggg	Y	
DC	Ames	2000-G-DCA	6	H	11-Jan-1988	11-Jan-2015	N	7	tt,ee,ff,gg,hh,ll,mm,oo,pp,uu,ccc,ddd,ffff,gggg	Y	
DC	Ames	2000-G-DCA	8	H	11-Jan-1988	11-Jan-2015	N	7	tt,ee,ff,gg,hh,ll,mm,oo,pp,uu,ccc,ddd,ffff,gggg	Y	
DC	Ames	2000B	1/2	H	6-Dec-1983	6-Dec-2013	N	8	(vv),xx,ooo,hhhh,pppp,rrrrr	N	
DC	Ames	2000B	1/2	H	16-Jun-1997	16-Jun-2015	N	9	(vv),xx,ooo,hhhh,pppp,rrrrr	N	
DC	Ames	2000B	1/2	VU	16-Jun-1997	16-Jun-2015	N	9	(vv),xx,ooo,hhhh,pppp,rrrrr	N	
DC	Ames	2000B	3/4	H	5-Apr-1993	5-Apr-2014	N	8	(vv),xx,ooo,hhhh,pppp,rrrrr	N	
DC	Ames	2000B	3/4	VU	27-Aug-1996	27-Aug-2014	N	8	(vv),xx,ooo,hhhh,pppp,rrrrr	N	
DC	Ames	2000B	1	H	18-May-1998	18-May-2013	N	9	(vv),xx,ooo,hhhh,pppp,rrrrr	N	
DC	Ames	2000B	1	H	26-Feb-1991	26-Feb-2015	N	8	(vv),xx,ooo,hhhh,pppp,rrrrr	N	
DC	Ames	2000B	1	VU	18-May-1998	18-May-2013	N	9	(vv),xx,ooo,hhhh,pppp,rrrrr	N	
DC	Ames	2000B	1 1/4	H	1-Oct-1996	1-Oct-2014	N	8	(vv),xx,ooo,hhhh,pppp,rrrrr	N	
DC	Ames	2000B	1 1/4	VU	1-Oct-1996	1-Oct-2014	N	8	(vv),xx,ooo,hhhh,pppp,rrrrr	N	
DC	Ames	2000B	1 1/2	H	24-May-1994	24-May-2015	N	8	(vv),xx,ooo,hhhh,pppp,rrrrr	N	
DC	Ames	2000B	1 1/2	VU	11-Mar-1996	11-Mar-2014	N	8	(vv),xx,ooo,hhhh,pppp,rrrrr	N	
DC	Ames	2000B	2	H	30-Jun-1992	30-Jun-2013	N	8	(vv),xx,ooo,hhhh,pppp,rrrrr	N	
DC	Ames	2000B	2	VU	8-Mar-1996	8-Mar-2014	N	8	(vv),xx,ooo,hhhh,pppp,rrrrr	N	
DC	Ames	2000B-FP	3/4	H	1-Sep-2009	1-Sep-2015	N	9	(eeeee)	N	
DC	Ames	2000B-FP	1	H	1-Sep-2009	1-Sep-2015	N	9	(eeeee)	N	
DC	Ames	2000B-FP	1 1/4	H	1-Sep-2009	1-Sep-2015	N	9	(eeeee)	N	
DC	Ames	2000B-FP	1 1/2	H	1-Sep-2009	1-Sep-2015	N	9	(eeeee)	N	
DC	Ames	2000B-FP	2	H	1-Sep-2009	1-Sep-2015	N	9	(eeeee)	N	
DC	Ames	2000BM3	3/4	H	27-Mar-2000	27-Mar-2015	N	9	(vv),xx,ooo,hhhh,pppp,rrrrr	N	
DC	Ames	2000BM3	3/4	VU	27-Mar-2000	27-Mar-2015	N	9	(vv),xx,ooo,hhhh,pppp,rrrrr	N	
DC	Ames	2000BM3-FP	3/4	H	1-Sep-2009	1-Sep-2015	N	9	(eeeee)	N	
DC	Ames	2000CIV	4	H	15-Jan-1982	15-Jan-2015	N	6	(oo),gg,hh,ll,mm,pp,tt,uu,eee	N	
DC	Ames	2000CIV	4	VU	11-Mar-1996	11-Mar-2014	N	8	(oo),gg,hh,ll,mm,pp,tt,uu,eee	N	
DC	Ames	2000CIV	6	H	18-May-1982	18-May-2015	N	6	(oo),gg,hh,ll,mm,pp,tt,uu,eee	N	
DC	Ames	2000CIV	6	VU	5-Dec-1996	5-Dec-2014	N	8	(oo),gg,hh,ll,mm,pp,tt,uu,eee	N	
DC	Ames	2000CIV	8	H	6-Jul-1981	6-Jul-2014	N	6	(oo),gg,hh,ll,mm,pp,tt,uu,eee	N	
DC	Ames	2000CIV	8	VU	5-Dec-1996	5-Dec-2014	N	8	(oo),gg,hh,ll,mm,pp,tt,uu,eee	N	
DC	Ames	2000CIV	10	H	16-Mar-1983	16-Mar-2016	N	6	(oo),gg,hh,ll,mm,pp,tt,uu,eee	N	
DC	Ames	2000CIV	10	VU	5-Dec-1996	5-Dec-2014	N	8	(oo),gg,hh,ll,mm,pp,tt,uu,eee	N	
DC	Ames	2000SE	2 1/2	H	10-Sep-1996	10-Sep-2014	N	8	(mm),ee,ff,gg,hh,ll,mm,oo,pp,tt,uu,ccc,ddd,ffff,gggg	N	
DC	Ames	2000SE	6	H	22-Nov-1993	22-Nov-2014	N	8	tt,ee,ff,gg,hh,ll,mm,oo,pp,uu,ccc,ddd,ffff,gggg	Y	
DC	Ames	2000SE	8	H	9-Sep-1992	9-Sep-2013	N	8	tt,ee,ff,gg,hh,ll,mm,oo,pp,uu,ccc,ddd,ffff,gggg	Y	
DC	Ames	2000SS	3/4	H	5-May-1995	5-May-2013	N	8	ii	Y	
DC	Ames	2000SS	1	H	5-May-1995	5-May-2013	N	8	ii	Y	
DC	Ames	2000SS	1 1/4	H	14-Jul-1995	14-Jul-2013	N	8	ii	Y	
DC	Ames	2000SS	1 1/2	H	13-Oct-1995	13-Oct-2013	N	8	ii	Y	
DC	Ames	2000SS	2	H	13-Oct-1995	13-Oct-2013	N	8	ii	Y	
DC	Ames	2000SS	2 1/2	H	11-Jul-1991	11-Jul-2015	N	8	(tt),ee,ff,gg,hh,pp,uu,ccc,ddd	N	
DC	Ames	2000SS	2 1/2	H	11-Jul-1991	11-Jul-2015	Y	8	ll,mm,oo,ffff,gggg	N	
DC	Ames	2000SS	3	H	11-Jul-1991	11-Jul-2015	N	8	(tt),ee,ff,gg,hh,pp,uu,ccc,ddd	N	
DC	Ames	2000SS	3	H	11-Jul-1991	11-Jul-2015	Y	8	ll,mm,oo,ffff,gggg	N	
DC	Ames	2000SS	4	H	11-Jul-1991	11-Jul-2015	N	8	(tt),ee,ff,gg,hh,pp,uu,ccc,ddd	N	
DC	Ames	2000SS	4	H	11-Jul-1991	11-Jul-2015	Y	8	ll,mm,oo,ffff,gggg	N	
DC	Ames	2000SS	6	H	9-Sep-1992	9-Sep-2013	N	8	(tt),ee,ff,gg,hh,pp,uu,ccc,ddd	N	
DC	Ames	2000SS	6	H	9-Sep-1992	9-Sep-2013	Y	8	ll,mm,oo,ffff,gggg	N	
DC	Ames	2000SS	8	H	16-Sep-1996	16-Sep-2014	N	8	(tt),ee,ff,gg,hh,pp,uu,ccc,ddd	N	
DC	Ames	2000SS	8	H	16-Sep-1996	16-Sep-2014	Y	8	ll,mm,oo,ffff,gggg	N	
DC	Ames	2000SS	10	H	16-Feb-2001	16-Feb-2016	N	8	pp,	N	
DC	Ames	2000SS	10	H	16-Feb-2001	16-Feb-2016	Y	8	(ll),mm,oo	N	
DC	Ames	2000SS	12	H	22-Jul-2009	22-Jul-2015	N	9	pp,	N	
DC	Ames	2000SS	12	H	22-Jul-2009	22-Jul-2015	Y	9	(ll),mm,oo	N	
DC	Ames	2000SS	12	VU	22-Feb-2011	22-Feb-2014	N	9	pp,	N	
DC	Ames	2000SS	12	VU	22-Feb-2011	22-Feb-2014	Y	9	(ll),mm,oo	N	
DC	Ames	2000SS-M	4	H	5-May-1995	5-May-2013	N	8	(tt),ee,ff,gg,hh,ll,mm,oo,pp,uu,ccc,ddd,ffff,gggg	N	
DC	Ames	2000SS-M	6	H	5-May-1995	5-May-2013	N	8	(tt),ee,ff,gg,hh,ll,mm,oo,pp,uu,ccc,ddd,ffff,gggg	N	
DC	Ames	200B	1/2	H	21-Apr-2006	21-Apr-2015	N	9	(vv),xx,ooo,hhhh,pppp,rrrrr	N	
DC	Ames	200B	1/2	VD	21-Apr-2006	21-Apr-2015	N	9	(vv),xx,ooo,hhhh,pppp,rrrrr	N	
DC	Ames	200B	1/2	VU	21-Apr-2006	21-Apr-2015	N	9	(vv),xx,ooo,hhhh,pppp,rrrrr	N	
DC	Ames	200B	3/4	H	21-Apr-2006	21-Apr-2015	N	9	(vv),xx,ooo,hhhh,pppp,rrrrr	N	
DC	Ames	200B	3/4	VD	21-Apr-2006	21-Apr-2015	N	9	(vv),xx,ooo,hhhh,pppp,rrrrr	N	
DC	Ames	200B	3/4	VU	21-Apr-2006	21-Apr-2015	N	9	(vv),xx,ooo,hhhh,pppp,rrrrr	N	
DC	Ames	200B	1	H	21-Apr-2006	21-Apr-2015	N	9	(vv),xx,ooo,hhhh,pppp,rrrrr	N	
DC	Ames	200B	1	VD	21-Apr-2006	21-Apr-2015	N	9	(vv),xx,ooo,hhhh,pppp,rrrrr	N	
DC	Ames	200B	1	VU	21-Apr-2006	21-Apr-2015	N	9	(vv),xx,ooo,hhhh,pppp,rrrrr	N	
DC	Ames	200B	1 1/4	H	21-Apr-2006	21-Apr-2015	N	9	(vv),xx,ooo,hhhh,pppp,rrrrr	N	
DC	Ames	200B	1 1/4	VD	21-Apr-2006	21-Apr-2015	N	9	(vv),xx,ooo,hhhh,pppp,rrrrr	N	
DC	Ames	200B	1 1/4	VU	21-Apr-2006	21-Apr-2015	N	9	(vv),xx,ooo,hhhh,pppp,rrrrr	N	
DC	Ames	200B	1 1/2	H	21-Apr-2006	21-Apr-2015	N	9	(vv),xx,ooo,hhhh,pppp,rrrrr	N	
DC	Ames	200B	1 1/2	VD	21-Apr-2006	21-Apr-2015	N	9	(vv),xx,ooo,hhhh,pppp,rrrrr	N	
DC	Ames	200B	1 1/2	VU	21-Apr-2006	21-Apr-2015	N	9	(vv),xx,ooo,hhhh,pppp,rrrrr	N	
DC	Ames	200B	2	H	21-Apr-2006	21-Apr-2015	N	9	(vv),xx,ooo,hhhh,pppp,rrrrr	N	
DC	Ames	200B	2	VD	21-Apr-2006	21-Apr-2015	N	9	(vv),xx,ooo,hhhh,pppp,rrrrr	N	
DC	Ames	200B	2	VU	21-Apr-2006	21-Apr-2015	N	9	(vv),xx,ooo,hhhh,pppp,rrrrr	N	
DC	Ames	200B R10	1/2	H	21-Apr-2006	21-Apr-2015	N	9	(vv),xx,ooo,hhhh,pppp,rrrrr	N	
DC	Ames	200B R10	1/2	VD	21-Apr-2006	21-Apr-2015	N	9	(vv),xx,ooo,hhhh,pppp,rrrrr	N	
DC	Ames	200B R10	1/2	VU	21-Apr-2006	21-Apr-2015	N	9	(vv),xx,ooo,hhhh,pppp,rrrrr	N	
DC	Ames	200B R10	3/4	H	21-Apr-2006	21-Apr-2015	N	9	(vv),xx,ooo,hhhh,pppp,rrrrr	N	
DC	Ames	200B R10	3/4	VD	21-Apr-2006	21-Apr-2015	N	9	(vv),xx,ooo,hhhh,pppp,rrrrr	N	
DC	Ames	200B R10	3/4	VU	21-Apr-2006	21-Apr-2015	N	9	(vv),xx,ooo,hhhh,pppp,rrrrr	N	
DC	Ames	200B-A	1/2	VUVD	21-Apr-2006	21-Apr-2015	N	9	(vv),xx,ooo,hhhh,pppp,rrrrr	N	
DC	Ames	200B-A	1	VUVD	21-Apr-2006	21-Apr-2015	N	9	(vv),xx,ooo,hhhh,pppp,rrrrr	N	
DC	Ames	200B-A	1 1/4	VUVD	21-Apr-2006	21-Apr-2015	N	9	(vv),xx,ooo,hhhh,pppp,rrrrr	N	
DC	Ames	200B-A	1 1/2	VUVD	21-Apr-2006	21-Apr-2015	N	9	(vv),xx,ooo,hhhh,pppp,rrrrr	N	
DC	Ames	200B-A	2	VUVD	21-Apr-2006	21-Apr-2015	N	9	(vv),xx,ooo,hhhh,pppp,rrrrr	N	
DC	Ames	200B-AR10	1/2	VUVD	3-Jul-2013		N	9	(vv),xx,ooo,hhhh,pppp,rrrrr	N	
DC	Ames	200B-AR10	3/4	VUVD	3-Jul-2013		N	9	(vv),xx,ooo,hhhh,pppp,rrrrr	N	
DC	Ames	Colt 200	2 1/2	H	20-Jul-2004	20-Jul-2013	N	9	(ppp),qqq,nnnnn	N	
DC	Ames	Colt 200	2 1/2	H	20-Jul-2004	20-Jul-2013	Y	9	yyy,zzz,dddd,eeee,dddd,gggg,kkkk,llll,mmmm,nnnn	N	
DC	Ames	Colt 200	2 1/2	VU	20-Jul-2004	20-Jul-2013	N	9	(ppp),qqq,nnnnn	N	
DC	Ames	Colt 200	2 1/2	VU	20-Jul-2004	20-Jul-2013	Y	9	yyy,zzz,dddd,eeee,dddd,gggg,kkkk,llll,mmmm,nnnn	N	
DC	Ames	Colt 200	3	H	20-Jul-2004	20-Jul-2013	N	9	(ppp),qqq,nnnnn	N	
DC	Ames	Colt 200	3	H	20-Jul-2004	20-Jul-2013	Y	9	yyy,zzz,dddd,eeee,dddd,gggg,kkkk,llll,mmmm,nnnn	N	
DC	Ames	Colt 200	3	VU	20-Jul-2004	20-Jul-2013	N	9	(ppp),qqq,nnnnn	N	
DC	Ames	Colt 200	3	VU	20-Jul-2004	20-Jul-2013	Y	9	yyy,zzz,dddd,eeee,dddd,gggg,kkkk,llll,mmmm,nnnn	N	
DC	Ames	Colt 200	4	H	20-Jul-2004	20-Jul-2013	N	9	(ppp),qqq,nnnnn	N	
DC	Ames	Colt 200	4	H	20-Jul-2004	20-Jul-2013	Y	9	yyy,zzz,dddd,eeee,dddd,gggg,kkkk,llll,mmmm,nnnn	N	
DC	Ames	Colt 200	4	VU	20-Jul-2004	20-Jul-2013	N	9	(ppp),qqq,nnnnn	N	
DC	Ames	Colt 200	4	VU	20-Jul-2004	20-Jul-2013	Y	9	yyy,zzz,dddd,eeee,dddd,gggg,kkkk,llll,mmmm,nnnn	N	
DC	Ames	Colt 200	6	H	21-Apr-2006	21-Apr-2015	N	9	(ppp),qqq,aaaa,bbbb,nnnnn	N	
DC	Ames	Colt 200	6	H	21-Apr-2006	21-Apr-2015	Y	9	yyy,zzz,dddd,eeee,ffff,gggg,kkkk,llll,mmmm,nnnn	N	
DC	Ames	Colt 200	6	VU	21-Apr-2006	21-Apr-2015	N	9	(ppp),qqq,aaaa,bbbb,nnnnn	N	
DC	Ames	Colt 200	6	VU	21-Apr-2006	21-Apr-2015	Y	9	yyy,zzz,dddd,eeee,ffff,gggg,kkkk,llll,mmmm,nnnn	N	
DC	Ames	Colt 200	8	H	11-Aug-2004	11-Aug-2013	N	9	ppp,qqq,aaaa,bbbb,nnnnn	N	
DC	Ames	Colt 200	8	H	11-Aug-2004	11-Aug-2013	Y	9	(yyy),zzz,dddd,eeee,gggg,kkkk,llll,mmmm,nnnn	N	
DC	Ames	Colt 200	8	VU	10-Feb-2006	10-Feb-2015	N	9	ppp,qqq,aaaa,bbbb,nnnnn	N	
DC	Ames	Colt 200	8	VU	10-Feb-2006	10-Feb-2015	Y	9	(yyy),zzz,dddd,eeee,gggg,kkkk,llll,mmmm,nnnn	N	
DC	Ames	Colt 200	10	H	2-May-2008	2-May-2014	N	9	ppp,qqq,aaaa,bbbb	N	
DC	Ames	Colt 200	10	H	2-May-2008	2-May-2014	Y	9	yyy,zzz,dddd,eeee,ggg,kkkk,llll,mmmm,nnnn	N	
DC	Ames	Colt 200	10	VU	2-May-2008	2-May-2014	N	9	(ppp),qqq,aaaa,bbbb	N	

Type	Manufacturer	Model	Size	Orientation(s)	Approved	Renewed	≤0.25% Pb	Manual	Shutoffs	Spare Parts	Bypass
DC	Apollo/Conbraco	4SG-100U	3								
DC	Apollo/Conbraco	4SG-100U	4								
DC	Apollo/Conbraco	4SG-100U	6								
DC	Apollo/Conbraco	4SG-100U	8								
DC	Apollo/Conbraco	6DC	6	H	16-Oct-2000	16-Oct-2015	N	9	(ll),mm	Y	
DC	Apollo/Conbraco	6DC	6	VU	16-Oct-2000	16-Oct-2015	N	9	(ll),mm	Y	
DC	Apollo/Conbraco	6DC7	6	H	23-Oct-2001	23-Oct-2013	N	9	(mm)[#1SOV], (qqq)[#2SOV]	Y	
DC	Apollo/Conbraco	6DC7	6	VU	23-Oct-2001	23-Oct-2013	N	9	(mm)[#1SOV], (qqq)[#2SOV]	Y	
DC	Apollo/Conbraco	6DC8	6	H	29-Sep-2004	29-Sep-2013	N	9	(ppp),qqq	Y	
DC	Apollo/Conbraco	6DC8	6	VU	29-Sep-2004	29-Sep-2013	N	9	(ppp),qqq	Y	
DC	Apollo/Conbraco	6DCU	6	VUVD	10-Apr-2001	10-Apr-2016	N	9	(ll),mm	Y	
DC	Apollo/Conbraco	8DC	8	H	16-Jan-2003	16-Jan-2015	N	9	(mm),ll	Y	
DC	Apollo/Conbraco	8DC	8	VU	16-Jan-2003	16-Jan-2015	N	9	(mm),ll	Y	
DC	Apollo/Conbraco	8DC8	8	H	29-Sep-2004	29-Sep-2013	N	9	(ppp),qqq	Y	
DC	Apollo/Conbraco	8DC8	8	VU	29-Sep-2004	29-Sep-2013	N	9	(ppp),qqq	Y	
DC	Apollo/Conbraco	DC40	3/4	H	27-Jun-1996	27-Jun-2014	N	8	(dd)	Y	
DC	Apollo/Conbraco	DC40	1	H	27-Jun-1996	27-Jun-2014	N	8	(dd)	Y	
DC	Apollo/Conbraco	DC40	1 1/4	H	9-Oct-1996	9-Oct-2014	N	8	(dd)	Y	
DC	Apollo/Conbraco	DC40	1 1/2	H	9-Oct-1996	9-Oct-2014	N	8	(dd)	Y	
DC	Apollo/Conbraco	DC40	2	H	9-Oct-1996	9-Oct-2014	N	8	(dd)	Y	
DC	Apollo/Conbraco	DC4A	1/2	H	27-Apr-2011	27-Apr-2014	N	9	(iiiii),sssss	N	
DC	Apollo/Conbraco	DC4A	1/2	VU	27-Apr-2011	27-Apr-2014	N	9	(iiiii),sssss	N	
DC	Apollo/Conbraco	DC4A	3/4	H	27-Apr-2011	27-Apr-2014	N	9	(iiiii),sssss	N	
DC	Apollo/Conbraco	DC4A	3/4	VU	6-Apr-2011	6-Apr-2014	N	9	(iiiii),sssss	N	
DC	Apollo/Conbraco	DC4A	1	H	27-Sep-2011	27-Sep-2014	N	9	(iiiii),sssss,wwwww	N	
DC	Apollo/Conbraco	DC4A	1	VU	6-Apr-2011	6-Apr-2014	N	9	(iiiii),sssss,wwwww	N	
DC	Apollo/Conbraco	DC4A	1 1/4	H	7-Feb-2012	7-Feb-2015	N	9	(iiiii),sssss,wwwww	N	
DC	Apollo/Conbraco	DC4A	1 1/4	VU	7-Feb-2012	7-Feb-2015	N	9	(iiiii),sssss,wwwww	N	
DC	Apollo/Conbraco	DC4A	1 1/2	H	7-Feb-2012	7-Feb-2015	N	9	(iiiii),sssss,wwwww	N	
DC	Apollo/Conbraco	DC4A	1 1/2	VU	7-Feb-2012	7-Feb-2015	N	9	(iiiii),sssss,wwwww	N	
DC	Apollo/Conbraco	DC4A	2	H	7-Feb-2012	7-Feb-2015	N	9	(iiiii),sssss,wwwww	N	
DC	Apollo/Conbraco	DC4A	2	VU	27-Mar-2012	27-Mar-2015	N	9	(iiiii),sssss,wwwww	N	
DC	Apollo/Conbraco	DC4S	1/2	H	18-Sep-2000	18-Sep-2015	N	9	(dd)	N	
DC	Apollo/Conbraco	DC4S	1/2	VU	18-Sep-2000	18-Sep-2015	N	9	(dd)	N	
DC	Apollo/Conbraco	DC4S	10	H	16-Jan-2003	16-Jan-2015	N	9	(mm),ll, xxxxx, zzzzz, bbbbbb, cccccc	N	
DC	Apollo/Conbraco	DC4S	10	VU	16-Jan-2003	16-Jan-2015	N	9	(mm),ll, xxxxx, zzzzz, bbbbbb, cccccc	N	
DC	Apollo/Conbraco	DC4SG	2 1/2	H	18-Oct-2007	18-Oct-2013	N	9	(yyy)ppp,qqq,ttt	N	
DC	Apollo/Conbraco	DC4SG	2 1/2	VU	18-Oct-2007	18-Oct-2013	N	9	(yyy)ppp,qqq,ttt	N	
DC	Apollo/Conbraco	DC4SG	3	H	25-Sep-2007	25-Sep-2013	N	9	(yyy)ppp,qqq,ttt	N	
DC	Apollo/Conbraco	DC4SG	3	VU	25-Sep-2007	25-Sep-2013	N	9	(yyy)ppp,qqq,ttt	N	
DC	Apollo/Conbraco	DC4SG	4	H	25-Sep-2007	25-Sep-2013	N	9	(yyy)ppp,qqq,ttt	N	
DC	Apollo/Conbraco	DC4SG	4	VU	25-Sep-2007	25-Sep-2013	N	9	(yyy)ppp,qqq,ttt	N	
DC	Apollo/Conbraco	DC4SG	6	H	25-Sep-2007	25-Sep-2013	N	9	(yyy)ppp,qqq,ttt	N	
DC	Apollo/Conbraco	DC4SG	6	VU	25-Sep-2007	25-Sep-2013	N	9	(yyy)ppp,qqq,ttt	N	
DC	Apollo/Conbraco	DC4SG	8	H	25-Sep-2007	25-Sep-2013	N	9	(yyy)ppp,qqq,ttt, xxxxx, yyyyy, zzzzz, aaaaaa	N	
DC	Apollo/Conbraco	DC4SG	8	VU	25-Sep-2007	25-Sep-2013	N	9	(yyy)ppp,qqq,ttt, xxxxx, yyyyy, zzzzz, aaaaaa	N	
DC	Apollo/Conbraco	DC4SGN	2 1/2	VUVD	18-Oct-2007	18-Oct-2013	N	9	(yyy)ppp,qqq,ttt	N	
DC	Apollo/Conbraco	DC4SGN	3	VUVD	18-Oct-2007	18-Oct-2013	N	9	(yyy)ppp,qqq,ttt	N	
DC	Apollo/Conbraco	DC4SGN	4	VUVD	18-Oct-2007	18-Oct-2013	N	9	(yyy)ppp,qqq,ttt	N	
DC	Apollo/Conbraco	DC4SGN	6	VUVD	25-Sep-2007	25-Sep-2013	N	9	(yyy)ppp,qqq,ttt	N	
DC	Apollo/Conbraco	DC4SGN	8	VUVD	25-Sep-2007	25-Sep-2013	N	9	(yyy)ppp,qqq,ttt	N	
DC	Apollo/Conbraco	DCLF4A	1/2	H	27-Apr-2011	27-Apr-2014	Y	10	(jjjjj),ttttt, uuuuu	N	
DC	Apollo/Conbraco	DCLF4A	1/2	VU	27-Apr-2011	27-Apr-2014	Y	10	(jjjjj),ttttt, uuuuu	N	
DC	Apollo/Conbraco	DCLF4A	3/4	H	27-Apr-2011	27-Apr-2014	Y	9	(jjjjj),ttttt	N	
DC	Apollo/Conbraco	DCLF4A	3/4	VU	6-Apr-2011	6-Apr-2014	Y	9	(jjjjj),ttttt	N	
DC	Apollo/Conbraco	DCLF4A	1	H	27-Sep-2011	27-Sep-2014	Y	9	(jjjjj),ttttt,vvvvv	N	
DC	Apollo/Conbraco	DCLF4A	1	VU	6-Apr-2011	6-Apr-2014	Y	9	(jjjjj),ttttt,vvvvv	N	
DC	Apollo/Conbraco	DCLF4A	1 1/4	H	7-Feb-2012	7-Feb-2015	Y	9	(jjjjj),ttttt,vvvvv	N	
DC	Apollo/Conbraco	DCLF4A	1 1/4	VU	7-Feb-2012	7-Feb-2015	Y	9	(jjjjj),ttttt,vvvvv	N	
DC	Apollo/Conbraco	DCLF4A	1 1/2	H	7-Feb-2012	7-Feb-2015	Y	9	(jjjjj),ttttt,vvvvv	N	
DC	Apollo/Conbraco	DCLF4A	1 1/2	VU	7-Feb-2012	7-Feb-2015	Y	9	(jjjjj),ttttt,vvvvv	N	
DC	Apollo/Conbraco	DCLF4A	2	H	7-Feb-2012	7-Feb-2015	Y	9	(jjjjj),ttttt,vvvvv	N	
DC	Apollo/Conbraco	DCLF4A	2	VU	27-Mar-2012	27-Mar-2015	Y	9	(jjjjj),ttttt,vvvvv	N	
DC	Apollo/Conbraco	DCLF4A	2 1/2	H	5-Nov-2013		Y	10	(yyy), cccc, dddd, mmmm, nnnn, xxxxx, yyyyy, zzzzz, aaaaaa	N	
DC	Apollo/Conbraco	DCLF4A	2 1/2	VU	5-Nov-2013		Y	10	(yyy), cccc, dddd, mmmm, nnnn, xxxxx, yyyyy, zzzzz, aaaaaa	N	
DC	Apollo/Conbraco	DCLF4A	3	H	5-Nov-2013		Y	10	(yyy), cccc, dddd, mmmm, nnnn, xxxxx, yyyyy, zzzzz, aaaaaa	N	
DC	Apollo/Conbraco	DCLF4A	3	VU	5-Nov-2013		Y	10	(yyy), cccc, dddd, mmmm, nnnn, xxxxx, yyyyy, zzzzz, aaaaaa	N	
DC	Apollo/Conbraco	DCLF4A	4	H	24-Jun-2013		Y	10	(yyy), cccc, dddd, mmmm, nnnn, xxxxx, yyyyy, zzzzz, aaaaaa	N	
DC	Apollo/Conbraco	DCLF4A	4	VU	24-Jun-2013		Y	10	(yyy), cccc, dddd, mmmm, nnnn, xxxxx, yyyyy, zzzzz, aaaaaa	N	
DC	Apollo/Conbraco	DCLF4A	6	H	24-Jun-2013		Y	10	(yyy), cccc, dddd, mmmm, nnnn, xxxxx, yyyyy, zzzzz, aaaaaa	N	
DC	Apollo/Conbraco	DCLF4A	6	VU	24-Jun-2013		Y	10	(yyy), cccc, dddd, mmmm, nnnn, xxxxx, yyyyy, zzzzz, aaaaaa	N	
DC	Apollo/Conbraco	DCLF4A	8	H	15-May-2014		Y	10	(yyy), cccc, dddd, mmmm, nnnn, xxxxx, yyyyy, zzzzz, aaaaaa	N	
DC	Apollo/Conbraco	DCLF4A	8	VU	15-May-2014		Y	10	(yyy), cccc, dddd, mmmm, nnnn, xxxxx, yyyyy, zzzzz, aaaaaa	N	
DC	Apollo/Conbraco	DCLF4AN	2 1/2	VUVD	10-Jun-2014		Y	10	(yyy), cccc, dddd, mmmm, nnnn, xxxxx, yyyyy, zzzzz, aaaaaa	N	
DC	Apollo/Conbraco	DCLF4AN	3	VUVD	8-Apr-2014		Y	10	(yyy), cccc, dddd, mmmm, nnnn, xxxxx, yyyyy, zzzzz, aaaaaa	N	
DC	Apollo/Conbraco	DCLF4AN	4	VUVD	22-Nov-2013		Y	10	(yyy), cccc, dddd, mmmm, nnnn, xxxxx, yyyyy, zzzzz, aaaaaa	N	
DC	Apollo/Conbraco	DCLF4AN	6	VUVD	15-Apr-2014		Y	10	(yyy), cccc, dddd, mmmm, nnnn, xxxxx, yyyyy, zzzzz, aaaaaa	N	
DC	Apollo/Conbraco	DCLF4AN	8	VUVD	20-Feb-2014		Y	10	(yyy), cccc, dddd, mmmm, nnnn, xxxxx, yyyyy, zzzzz, aaaaaa	N	
DC	Apollo/Conbraco	DCLF4AR	2 1/2	H	9-Nov-2015		N	10	(cccc), dddd, mmmm, nnnn, xxxxx, yyyyy, zzzzz, aaaaaa	N	
DC	Apollo/Conbraco	DCLF4AR	2 1/2	VU	9-Nov-2015		N	10	(cccc), dddd, mmmm, nnnn, xxxxx, yyyyy, zzzzz, aaaaaa	N	
DC	Apollo/Conbraco	DCLF4AR	3	H	9-Nov-2015		N	10	(cccc), dddd, mmmm, nnnn, xxxxx, yyyyy, zzzzz, aaaaaa	N	
DC	Apollo/Conbraco	DCLF4AR	3	VU	9-Nov-2015		N	10	(cccc), dddd, mmmm, nnnn, xxxxx, yyyyy, zzzzz, aaaaaa	N	
DC	Apollo/Conbraco	DCLF4AR	4	H	21-Sep-2015		N	10	(cccc), dddd, mmmm, nnnn, xxxxx, yyyyy, zzzzz, aaaaaa	N	
DC	Apollo/Conbraco	DCLF4AR	4	VU	21-Sep-2015		N	10	(cccc), dddd, mmmm, nnnn, xxxxx, yyyyy, zzzzz, aaaaaa	N	
DC	Apollo/Conbraco	DCLF4AR	6	H	21-Sep-2015		N	10	(cccc), dddd, mmmm, nnnn, xxxxx, yyyyy, zzzzz, aaaaaa	N	
DC	Apollo/Conbraco	DCLF4AR	6	VU	21-Sep-2015		N	10	(cccc), dddd, mmmm, nnnn, xxxxx, yyyyy, zzzzz, aaaaaa	N	
DC	Apollo/Conbraco	DCLF4AR	8	H	21-Dec-2015		N	10	(cccc), dddd, mmmm, nnnn, xxxxx, yyyyy, zzzzz, aaaaaa	N	
DC	Apollo/Conbraco	DCLF4AR	8	VU	21-Dec-2015		N	10	(cccc), dddd, mmmm, nnnn, xxxxx, yyyyy, zzzzz, aaaaaa	N	
DC	Apollo/Conbraco	DCLF4SG	2 1/2	H	23-Jan-2015		Y	9	(yyy), cccc, dddd, mmmm, nnnn, xxxxx, yyyyy, zzzzz, aaaaaa	N	
DC	Apollo/Conbraco	DCLF4SG	2 1/2	VU	23-Jan-2015		Y	9	(yyy), cccc, dddd, mmmm, nnnn, xxxxx, yyyyy, zzzzz, aaaaaa	N	
DC	Apollo/Conbraco	DCLF4SG	3	H	23-Jan-2015		Y	9	(yyy), cccc, dddd, mmmm, nnnn, xxxxx, yyyyy, zzzzz, aaaaaa	N	
DC	Apollo/Conbraco	DCLF4SG	3	VU	23-Jan-2015		Y	9	(yyy), cccc, dddd, mmmm, nnnn, xxxxx, yyyyy, zzzzz, aaaaaa	N	
DC	Apollo/Conbraco	DCLF4SG	4	H	23-Jan-2015		Y	9	(yyy), cccc, dddd, mmmm, nnnn, xxxxx, yyyyy, zzzzz, aaaaaa	N	
DC	Apollo/Conbraco	DCLF4SG	4	VU	23-Jan-2015		Y	9	(yyy), cccc, dddd, mmmm, nnnn, xxxxx, yyyyy, zzzzz, aaaaaa	N	
DC	Apollo/Conbraco	DCLF4SG	6	H	23-Jan-2015		Y	9	(yyy), cccc, dddd, mmmm, nnnn, xxxxx, yyyyy, zzzzz, aaaaaa	N	
DC	Apollo/Conbraco	DCLF4SG	6	VU	23-Jan-2015		Y	9	(yyy), cccc, dddd, mmmm, nnnn, xxxxx, yyyyy, zzzzz, aaaaaa	N	
DC	Apollo/Conbraco	W432100	1/2	H	18-Oct-2007	18-Oct-2013	N	9	(dd)	N	
DC	Apollo/Conbraco	W432100	1/2	VU	18-Oct-2007	18-Oct-2013	N	9	(dd)	N	
DC	ARI	DC 500	1/2	H	3-Jan-2013	3-Jan-2016	N	9	(ooooo), ii, ooo	N	
DC	ARI	DC 500	1/2	H	18-Feb-2014		Y	9	(ooooo)	N	
DC	ARI	DC 500	3/4	H	2-Mar-2007	2-Mar-2016	N	9	(ii),ooo, ooooo	N	
DC	ARI	DC 500	3/4	H	18-Feb-2014		Y	9	(ooooo)	N	
DC	ARI	DC 500	1	H	2-Mar-2007	2-Mar-2016	N	9	(ii),ooo, ooooo	N	
DC	ARI	DC 500	1	H	18-Feb-2014		Y	9	(ooooo)	N	
DC	ARI	DC 500	1 1/4	H	8-Jan-2014		Y	10	(ooooo)	N	
DC	ARI	DC 500	1 1/2	H	8-Jan-2014		Y	10	(ooooo)	N	
DC	ARI	DC 500	2	H	8-Jan-2014		Y	10	(ooooo)	N	
DC	Backflow Direct	Deringer 20	2 1/2	H	21-Dec-2015		Y	10	(int)	N	
DC	Backflow Direct	Deringer 20	2 1/2	VU	21-Dec-2015		Y	10	(int)	N	
DC	Backflow Direct	Deringer 20	3	H	21-Dec-2015		Y	10	(int)	N	
DC	Backflow Direct	Deringer 20	3	VU	21-Dec-2015		Y	10	(int)	N	
DC	Backflow Direct	Deringer 20	4	H	30-Sep-2015		Y	10	(int)	N	
DC	Backflow Direct	Deringer 20	4	VU	30-Sep-2015		Y	10	(int)	N	
DC	Cash Acme	DC 500	3/4	H	19-Apr-2012	19-Apr-2015	Y	9	(ii),ooo	N	
DC	Cash Acme	DC 500	1	H	19-Apr-2012	19-Apr-2015	Y	9	(ii),ooo	N	
DC	Cash Acme	DC100	3/4	H	20-Oct-2008	20-Oct-2014	N	8	(ii)	N	
DC	Cash Acme	DC100	1	H	20-Oct-2008	20-Oct-2014	N	8	(ii)	N	
DC	Cash Acme	DC100	1 1/2	H	20-Oct-2008	20-Oct-2014	N	8	(ii)	N	
DC	Cash Acme	DC100	2	H	20-Oct-2008	20-Oct-2014	N	8	(ii)	N	
DC	Cla-Val	D4	8	H	22-Jun-1989	22-Jun-2013	N	8	(gg),hh,qq,rr	Y	
DC	Cla-Val	D4	10	H	22-Jun-1989	22-Jun-2013	N	8	(gg),hh,qq,rr	Y	
DC	Conbraco						N				
DC	Febco	750	10	H	17-Sep-2009	17-Sep-2015	N	9	(ppp),qqq,aaaa,bbbb	N	
DC	Febco	750	10	H	17-Sep-2009	17-Sep-2015	Y	9	yyy,zzz,dddd,eeee,ffff,gggg,kkkk,llll,mmmm,nnnn	N	
DC	Febco	750	10	VU	17-Sep-2009	17-Sep-2015	N	9	(ppp),qqq,aaaa,bbbb	N	

Type	Manufacturer	Model	Size	Orientation(s)	Approved	Renewed	≤0.25% Pb	Manual	Shutoffs	Spare Parts	Bypass
DC	Febco	750	10	VU	17-Sep-2009	17-Sep-2015	Y	9	yyy,zzz,dddd,eeee,ffff,gggg,kkkk,llll,mmmm,nnnn	N	
DC	Febco	850	1/2	H	21-Nov-1997	21-Nov-2015	N	9	(fff),ooo	N	
DC	Febco	850	1/2	VD	13-Apr-2000	13-Apr-2015	N	9	(fff),ooo	N	
DC	Febco	850	1/2	VU	17-Dec-1999	17-Dec-2014	N	9	(fff),ooo	N	
DC	Febco	850	3/4	H	21-Nov-1997	21-Nov-2015	N	9	(fff),jjj,ooo	N	
DC	Febco	850	3/4	VD	10-Apr-2000	10-Apr-2015	N	9	(fff),jjj,ooo	N	
DC	Febco	850	3/4	VU	17-Dec-1999	17-Dec-2014	N	9	(fff),jjj,ooo	N	
DC	Febco	850	1	H	21-Nov-1997	21-Nov-2015	N	9	(fff),jjj,ooo	N	
DC	Febco	850	1	VD	14-Jan-2000	14-Jan-2015	N	9	(fff),jjj,ooo	N	
DC	Febco	850	1	VU	7-Sep-2000	7-Sep-2015	N	9	(fff),jjj,ooo	N	
DC	Febco	850	1 1/4	H	21-Nov-1997	21-Nov-2015	N	9	(fff),jjj,ooo	N	
DC	Febco	850	1 1/4	VD	13-Apr-2000	13-Apr-2015	N	9	(fff),jjj,ooo	N	
DC	Febco	850	1 1/4	VU	17-Jul-1999	17-Jul-2014	N	9	(fff),jjj,ooo	N	
DC	Febco	850	1 1/2	H	19-Feb-1998	19-Feb-2016	N	9	(fff),jjj,ooo	N	
DC	Febco	850	1 1/2	VD	13-Apr-2000	13-Apr-2015	N	9	(fff),jjj,ooo	N	
DC	Febco	850	1 1/2	VU	17-Jul-1999	17-Jul-2014	N	9	(fff),jjj,ooo	N	
DC	Febco	850	2	H	19-Feb-1998	19-Feb-2016	N	9	(fff),ooo	N	
DC	Febco	850	2	VD	10-Apr-2000	10-Apr-2015	N	9	(fff),ooo	N	
DC	Febco	850	2	VU	17-Jul-1999	17-Jul-2014	N	9	(fff),ooo	N	
DC	Febco	850	2 1/2	H	14-Mar-1997	14-Mar-2015	N	8	(ee),ff,ll,mm,oo,pp,tt,uu,zzz,cccc,ffff,gggg	Y	
DC	Febco	850	2 1/2	VU	19-Mar-1997	19-Mar-2015	N	8	(ee),ff,ll,mm,oo,pp,tt,uu,zzz,cccc,ffff,gggg	Y	
DC	Febco	850	3	H	14-Mar-1997	14-Mar-2015	N	8	(ee),ff,ll,mm,oo,pp,tt,uu,zzz,cccc,ffff,gggg	Y	
DC	Febco	850	3	VU	19-Mar-1997	19-Mar-2015	N	8	(ee),ff,ll,mm,oo,pp,tt,uu,zzz,cccc,ffff,gggg	Y	
DC	Febco	850	4	H	4-May-1994	4-May-2015	N	8	(ee),ff,ll,mm,oo,pp,tt,uu,nnn,zzz,cccc,ffff,gggg	Y	
DC	Febco	850	4	VU	7-Feb-1995	7-Feb-2016	N	8	(ee),ff,ll,mm,oo,pp,tt,uu,nnn,zzz,cccc,ffff,gggg	Y	
DC	Febco	850	6	H	4-May-1994	4-May-2015	N	8	(ee),ff,ll,mm,oo,pp,tt,uu,nnn,zzz,cccc,ffff,gggg	Y	
DC	Febco	850	6	VU	31-May-1995	31-May-2013	N	8	(ee),ff,ll,mm,oo,pp,tt,uu,nnn,zzz,cccc,ffff,gggg	Y	
DC	Febco	850	8	H	4-Oct-1995	4-Oct-2013	N	8	(ee),ff,ll,mm,oo,pp,tt,uu,nnn,zzz,cccc,ffff,gggg	Y	
DC	Febco	850	8	VU	14-Oct-1996	14-Oct-2014	N	8	(ee),ff,ll,mm,oo,pp,tt,uu,nnn,zzz,cccc,ffff,gggg	Y	
DC	Febco	857	2 1/2	H	1-Aug-2006	1-Aug-2015	N	8	(oo), gg, hh,ll, mm, pp, tt, uu, yy, fff	Y	
DC	Febco	857	2 1/2	VU	1-Aug-2006	1-Aug-2015	N	8	(oo), gg, hh,ll, mm, pp, tt, uu, yy, fff	Y	
DC	Febco	857	3	H	1-Aug-2006	1-Aug-2015	N	8	(oo), gg, hh,ll, mm, pp, tt, uu, yy, fff	Y	
DC	Febco	857	3	VU	1-Aug-2006	1-Aug-2015	N	8	(oo), gg, hh,ll, mm, pp, tt, uu, yy, fff	Y	
DC	Febco	870	2 1/2	VUVD	10-Mar-1995	10-Mar-2016	N	8	ee,ff,ll,mm,oo,pp,tt,uu,zzz,ffff,gggg	Y	
DC	Febco	870	3	VUVD	10-Mar-1995	10-Mar-2016	N	8	ee,ff,ll,mm,oo,pp,tt,uu,zzz,ffff,gggg	Y	
DC	Febco	870	4	VUVD	4-May-1994	4-May-2015	N	8	ee,ff,ll,mm,oo,pp,tt,uu,zzz,ffff,gggg	Y	
DC	Febco	870	6	VUVD	4-May-1994	4-May-2015	N	8	ee,ff,ll,mm,oo,pp,tt,uu,zzz,ffff,gggg	Y	
DC	Febco	870	8	VUVD	24-May-1994	24-May-2015	N	8	ee,ff,ll,mm,oo,pp,tt,uu,zzz,ffff,gggg	Y	
DC	Febco	870	10	VUVD	4-Oct-1996	4-Oct-2014	N	8	ee,ff,ll,mm,oo,pp,tt,uu,zzz,ffff,gggg	Y	
DC	Febco	750	2 1/2	H	17-Sep-2009	17-Sep-2015	N	9	(ppp),qqq	N	
DC	Febco	750	2 1/2	H	17-Sep-2009	17-Sep-2015	Y	9	yyy,zzz,dddd,eeee,gggg,kkkk,llll,mmmm,nnnn	N	
DC	Febco	750	2 1/2	VU	17-Sep-2009	17-Sep-2015	N	9	(ppp),qqq	N	
DC	Febco	750	2 1/2	VU	17-Sep-2009	17-Sep-2015	Y	9	yyy,zzz,dddd,eeee,dddd,gggg,kkkk,llll,mmmm,nnnn	N	
DC	Febco	750	3	H	17-Sep-2009	17-Sep-2015	N	9	(ppp),qqq	N	
DC	Febco	750	3	H	17-Sep-2009	17-Sep-2015	Y	9	yyy,zzz,dddd,eeee,dddd,gggg,kkkk,llll,mmmm,nnnn	N	
DC	Febco	750	3	VU	17-Sep-2009	17-Sep-2015	N	9	(ppp),qqq	N	
DC	Febco	750	3	VU	17-Sep-2009	17-Sep-2015	Y	9	yyy,zzz,dddd,eeee,dddd,gggg,kkkk,llll,mmmm,nnnn	N	
DC	Febco	750	4	H	17-Sep-2009	17-Sep-2015	N	9	(ppp),qqq	N	
DC	Febco	750	4	H	17-Sep-2009	17-Sep-2015	Y	9	yyy,zzz,dddd,eeee,dddd,gggg,kkkk,llll,mmmm,nnnn	N	
DC	Febco	750	4	VU	17-Sep-2009	17-Sep-2015	N	9	(ppp),qqq	N	
DC	Febco	750	4	VU	17-Sep-2009	17-Sep-2015	Y	9	yyy,zzz,dddd,eeee,dddd,gggg,kkkk,llll,mmmm,nnnn	N	
DC	Febco	750	6	H	17-Sep-2009	17-Sep-2015	N	9	(ppp),qqq,aaaa,bbbb	N	
DC	Febco	750	6	H	17-Sep-2009	17-Sep-2015	Y	9	zzz,dddd,eeee,ffff,gggg,kkkk,llll,mmmm,nnnn	N	
DC	Febco	750	6	VU	17-Sep-2009	17-Sep-2015	N	9	(ppp),qqq,aaaa,bbbb	N	
DC	Febco	750	6	VU	17-Sep-2009	17-Sep-2015	Y	9	zzz,dddd,eeee,ffff,gggg,kkkk,llll,mmmm,nnnn	N	
DC	Febco	750	8	H	17-Sep-2009	17-Sep-2015	N	9	(yyy),ppp,qqq,aaaa,bbbb	N	
DC	Febco	750	8	H	17-Sep-2009	17-Sep-2015	Y	9	(yyy),zzz,dddd,eeee,gggg,kkkk,llll,mmmm,nnnn	N	
DC	Febco	750	8	VU	17-Sep-2009	17-Sep-2015	N	9	(yyy),ppp,qqq,aaaa,bbbb	N	
DC	Febco	750	8	VU	17-Sep-2009	17-Sep-2015	Y	9	(yyy),zzz,dddd,eeee,gggg,kkkk,llll,mmmm,nnnn	N	
DC	Febco	750N	2 1/2	VUVD	17-Sep-2009	17-Sep-2015	N	9	(ppp),qqq	N	
DC	Febco	750N	2 1/2	VUVD	17-Sep-2009	17-Sep-2015	Y	9	zzz,dddd,eeee,dddd,gggg,kkkk,llll,mmmm,nnnn	N	
DC	Febco	750N	3	VUVD	17-Sep-2009	17-Sep-2015	N	9	(ppp),qqq	N	
DC	Febco	750N	3	VUVD	17-Sep-2009	17-Sep-2015	Y	9	zzz,dddd,eeee,dddd,gggg,kkkk,llll,mmmm,nnnn	N	
DC	Febco	750N	4	VUVD	17-Sep-2009	17-Sep-2015	N	9	(ppp),qqq	N	
DC	Febco	750N	4	VUVD	17-Sep-2009	17-Sep-2015	Y	9	zzz,dddd,eeee,dddd,gggg,kkkk,llll,mmmm,nnnn	N	
DC	Febco	750N	6	VUVD	17-Sep-2009	17-Sep-2015	N	9	(ppp),qqq	N	
DC	Febco	750N	6	VUVD	17-Sep-2009	17-Sep-2015	Y	9	zzz,dddd,eeee,dddd,gggg,kkkk,llll,mmmm,nnnn	N	
DC	Febco	805 Type YD	2 1/2								
DC	Febco	805 Type YD	3								
DC	Febco	805 Type YD	4								
DC	Febco	805 Type YD	6								
DC	Febco	805 Type YD	8								
DC	Febco	805 Type YD	10								
DC	Febco	805Y	3/4	H	13-May-1982	13-May-2015	N	6	ii,fff,jjj,ooo	Y	
DC	Febco	805Y	1	H	13-May-1982	13-May-2015	N	6	ii,fff,jjj,ooo	Y	
DC	Febco	805Y	1 1/2	H	5-Jan-1983	5-Jan-2016	N	6	ii,fff,jjj,ooo	Y	
DC	Febco	805Y	2	H	5-Jan-1983	5-Jan-2016	N	6	ii,fff,ooo	Y	
DC	Febco	805YB	3/4	H	4-May-1994	4-May-2015	N	8	(ii),fff,jjj,ooo	N	
DC	Febco	805YB	3/4	VU	16-Apr-1996	16-Apr-2014	N	8	(ii),fff,jjj,ooo	N	
DC	Febco	805YD	2 1/2	H	31-May-1987	31-May-2014	N	7	(ee),ff,ll,mm,oo,pp,tt,uu,zzz,ffff,gggg	Y	
DC	Febco	805YD	3	H	31-May-1987	31-May-2014	N	7	(ee),ff,ll,mm,oo,pp,tt,uu,zzz,ffff,gggg	Y	
DC	Febco	805YD	4	H	31-May-1987	31-May-2014	N	7	(ee),ff,ll,mm,oo,pp,tt,uu,zzz,ffff,gggg	Y	
DC	Febco	805YD	6	H	31-May-1987	31-May-2014	N	7	(ee),ff,ll,mm,oo,pp,tt,uu,zzz,ffff,gggg	Y	
DC	Febco	805YD	8	H	31-May-1987	31-May-2014	N	7	(ee),ff,ll,mm,oo,pp,tt,uu,zzz,ffff,gggg	Y	
DC	Febco	805YD	10	H	31-May-1987	31-May-2014	N	7	(ee),ff,ll,mm,oo,pp,tt,uu,zzz,ffff,gggg	Y	
DC	Febco	805YR	3/4	H	22-Jan-1993	22-Jan-2014	N	8	ii,fff,jjj,ooo	Y	
DC	Febco	805YR	1	H	22-Jan-1993	22-Jan-2014	N	8	ii,fff,jjj,ooo	Y	
DC	Febco	850F	3/4	H	28-Sep-2001	28-Sep-2013	N	9	fff,jjj	Y	
DC	Febco	850F	3/4	VD	28-Sep-2001	28-Sep-2013	N	9	(fff),jjj	N	
DC	Febco	850F	3/4	VU	28-Sep-2001	28-Sep-2013	N	9	(fff),jjj	N	
DC	Febco	850U	1/2	H	12-Oct-1998	12-Oct-2013	N	9	(kkk)	N	
DC	Febco	850U	1/2	VD	16-Oct-2000	16-Oct-2015	N	9	(kkk)	N	
DC	Febco	850U	1/2	VU	17-Dec-1999	17-Dec-2014	N	9	(kkk)	N	
DC	Febco	850U	3/4	H	8-Mar-1999	8-Mar-2014	N	9	(kkk)	N	
DC	Febco	850U	3/4	VD	16-Oct-2000	16-Oct-2015	N	9	(kkk)	N	
DC	Febco	850U	3/4	VU	17-Dec-1999	17-Dec-2014	N	9	(kkk)	N	
DC	Febco	850U	1	H	4-Aug-1999	4-Aug-2014	N	9	(kkk)	N	
DC	Febco	850U	1	VD	14-Jan-2000	14-Jan-2015	N	9	(kkk)	N	
DC	Febco	850U	1	VU	16-Oct-2000	16-Oct-2015	N	9	(kkk)	N	
DC	Febco	850U	1 1/4	H	12-Oct-1998	12-Oct-2013	N	9	(kkk)	N	
DC	Febco	850U	1 1/4	VD	16-Oct-2000	16-Oct-2015	N	9	(kkk)	N	
DC	Febco	850U	1 1/4	VU	4-Aug-1999	4-Aug-2014	N	9	(kkk)	N	
DC	Febco	850U	1 1/2	H	12-Oct-1998	12-Oct-2013	N	9	(kkk)	N	
DC	Febco	850U	1 1/2	VD	16-Oct-2000	16-Oct-2015	N	9	(kkk)	N	
DC	Febco	850U	1 1/2	VU	4-Aug-1999	4-Aug-2014	N	9	(kkk)	N	
DC	Febco	850U	2	H	12-Oct-1998	12-Oct-2013	N	9	(kkk)	N	
DC	Febco	850U	2	VD	16-Oct-2000	16-Oct-2015	N	9	(kkk)	N	
DC	Febco	850U	2	VU	4-Aug-1999	4-Aug-2014	N	9	(kkk)	N	
DC	Febco	870V	2 1/2	VUVD	8-Mar-1996	8-Mar-2014	N	8	(ee),ff,ll,mm,oo,pp,tt,uu,zzz,cccc,ffff,gggg	Y	
DC	Febco	870V	2 1/2	VUVU	8-Mar-1996	8-Mar-2014	N	8	(ee),ff,ll,mm,oo,pp,tt,uu,zzz,cccc,ffff,gggg	Y	
DC	Febco	870V	3	VUVD	8-Mar-1996	8-Mar-2014	N	8	(ee),ff,ll,mm,oo,pp,tt,uu,zzz,cccc,ffff,gggg	Y	
DC	Febco	870V	3	VUVU	8-Mar-1996	8-Mar-2014	N	8	(ee),ff,ll,mm,oo,pp,tt,uu,zzz,cccc,ffff,gggg	Y	
DC	Febco	870V	4	VUVD	8-Mar-1996	8-Mar-2014	N	8	(ee),ff,ll,mm,oo,pp,tt,uu,zzz,cccc,ffff,gggg	Y	
DC	Febco	870V	4	VUVU	8-Mar-1996	8-Mar-2014	N	8	(ee),ff,ll,mm,oo,pp,tt,uu,zzz,cccc,ffff,gggg	Y	
DC	Febco	870V	6	VUVD	8-Mar-1996	8-Mar-2014	N	8	(ee),ff,ll,mm,oo,pp,tt,uu,zzz,cccc,ffff,gggg	Y	
DC	Febco	870V	6	VUVU	8-Mar-1996	8-Mar-2014	N	8	(ee),ff,ll,mm,oo,pp,tt,uu,zzz,cccc,ffff,gggg	Y	
DC	Febco	870V	8	VUVD	6-Jan-1997	6-Jan-2014	N	8	(ee),ff,ll,mm,oo,pp,tt,uu,zzz,cccc,ffff,gggg	Y	
DC	Febco	870V	8	VUVU	6-Jan-1997	6-Jan-2014	N	8	(ee),ff,ll,mm,oo,pp,tt,uu,zzz,cccc,ffff,gggg	Y	
DC	Febco	870V	10	VUVD	11-Jul-1997	11-Jul-2015	N	8	(ee),ff,ll,mm,oo,pp,tt,uu,zzz,cccc,dddd,eeee,ffff,gggg,nnnnn	N	
DC	Febco	870V	10	VUVU	11-Jul-1997	11-Jul-2015	N	8	(ee),ff,ll,mm,oo,pp,tt,uu,zzz,cccc,dddd,eeee,ffff,gggg,nnnnn	N	
DC	Febco	LF850	1/2	H	18-Feb-2010	18-Feb-2016	Y	9	(qqqqq), hhhh	N	
DC	Febco	LF850	3/4	H	18-Feb-2010	18-Feb-2016	Y	9	(qqqqq), hhhh	N	
DC	Febco	LF850	1	H	18-Feb-2010	18-Feb-2016	Y	9	(qqqqq), hhhh	N	
DC	Febco	LF850	1 1/4	H	18-Feb-2010	18-Feb-2016	Y	9	(qqqqq), hhhh	N	
DC	Febco	LF850	1 1/2	H	18-Feb-2010	18-Feb-2016	Y	9	(qqqqq), hhhh	N	

Type	Manufacturer	Model	Size	Orientation(s)	Approved	Renewed	≤0.25% Pb	Manual	Shutoffs	Spare Parts	Bypass
DC	Febco	LF850	2	H	18-Feb-2010	18-Feb-2016	Y	9	(qqqqq), hhhh	N	
DC	Febco	LF850	2 1/2	H	22-May-2012	22-May-2015	Y	9	(mm),ll,oo,pp,zzz,cccc,dddd,eeee,ffff,gggg,nnnnn	N	
DC	Febco	LF850	2 1/2	VU	22-May-2012	22-May-2015	Y	9	(mm),ll,oo,pp,zzz,cccc,dddd,eeee,ffff,gggg,nnnnn	N	
DC	Febco	LF850	3	H	22-May-2012	22-May-2015	Y	9	(mm),ll,oo,pp,zzz,cccc,dddd,eeee,ffff,gggg,nnnnn	N	
DC	Febco	LF850	3	VU	22-May-2012	22-May-2015	Y	9	(mm),ll,oo,pp,zzz,cccc,dddd,eeee,ffff,gggg,nnnnn	N	
DC	Febco	LF850	4	H	22-May-2012	22-May-2015	Y	9	(mm),ll,oo,pp,zzz,cccc,dddd,eeee,ffff,gggg,nnnnn	N	
DC	Febco	LF850	4	VU	22-May-2012	22-May-2015	Y	9	(mm),ll,oo,pp,zzz,cccc,dddd,eeee,ffff,gggg,nnnnn	N	
DC	Febco	LF850	6	H	22-May-2012	22-May-2015	Y	9	(mm),ll,oo,pp,zzz,cccc,dddd,eeee,ffff,gggg,nnnnn	N	
DC	Febco	LF850	6	VU	22-May-2012	22-May-2015	Y	9	(mm),ll,oo,pp,zzz,cccc,dddd,eeee,ffff,gggg,nnnnn	N	
DC	Febco	LF850	8	H	22-May-2012	22-May-2015	Y	9	(mm),ll,oo,pp,zzz,cccc,dddd,eeee,ffff,gggg,nnnnn	N	
DC	Febco	LF850	8	VU	22-May-2012	22-May-2015	Y	9	(mm),ll,oo,pp,zzz,cccc,dddd,eeee,ffff,gggg,nnnnn	N	
DC	Febco	LF850	10	H	24-Jun-2013		Y	9	(mm),ll,oo,pp,zzz,cccc,dddd,eeee,ffff,gggg,nnnnn	N	
DC	Febco	LF850	10	VU	24-Jun-2013		Y	9	(mm),ll,oo,pp,zzz,cccc,dddd,eeee,ffff,gggg,nnnnn	N	
DC	Febco	LF850U	1/2	H	3-Sep-2013		Y	9	(ppppp), hhhh	N	
DC	Febco	LF850U	3/4	H	3-Sep-2013		Y	9	(ppppp), hhhh	N	
DC	Febco	LF850U	1	H	3-Sep-2013		Y	9	(ppppp), hhhh	N	
DC	Febco	LF850U	1 1/4	H	3-Sep-2013		Y	9	(ppppp), hhhh	N	
DC	Febco	LF850U	1 1/2	H	3-Sep-2013		Y	9	(ppppp), hhhh	N	
DC	Febco	LF850U	2	H	3-Sep-2013		Y	9	(ppppp), hhhh	N	
DC	Febco	LF870V	2 1/2	VUVD	9-Aug-2012	9-Aug-2015	Y	9	(mm),ll,oo,pp,zzz,cccc,dddd,eeee,ffff,gggg,nnnnn	N	
DC	Febco	LF870V	2 1/2	VUVU	9-Aug-2012	9-Aug-2015	Y	9	(mm),ll,oo,pp,zzz,cccc,dddd,eeee,ffff,gggg,nnnnn	N	
DC	Febco	LF870V	3	VUVD	22-May-2012	22-May-2015	Y	9	(mm),ll,oo,pp,zzz,cccc,dddd,eeee,ffff,gggg,nnnnn	N	
DC	Febco	LF870V	3	VUVU	22-May-2012	22-May-2015	Y	9	(mm),ll,oo,pp,zzz,cccc,dddd,eeee,ffff,gggg,nnnnn	N	
DC	Febco	LF870V	4	VUVD	22-May-2012	22-May-2015	Y	9	(mm),ll,oo,pp,zzz,cccc,dddd,eeee,ffff,gggg,nnnnn	N	
DC	Febco	LF870V	4	VUVU	22-May-2012	22-May-2015	Y	9	(mm),ll,oo,pp,zzz,cccc,dddd,eeee,ffff,gggg,nnnnn	N	
DC	Febco	LF870V	6	VUVD	22-May-2012	22-May-2015	Y	9	(mm),ll,oo,pp,zzz,cccc,dddd,eeee,ffff,gggg,nnnnn	N	
DC	Febco	LF870V	6	VUVU	22-May-2012	22-May-2015	Y	9	(mm),ll,oo,pp,zzz,cccc,dddd,eeee,ffff,gggg,nnnnn	N	
DC	Febco	LF870V	8	VUVD	22-May-2012	22-May-2015	Y	9	(mm),ll,oo,pp,zzz,cccc,dddd,eeee,ffff,gggg,nnnnn	N	
DC	Febco	LF870V	8	VUVU	22-May-2012	22-May-2015	Y	9	(mm),ll,oo,pp,zzz,cccc,dddd,eeee,ffff,gggg,nnnnn	N	
DC	Flomatic	DCV	3/4	H	4-May-1994	4-May-2015	N	8	ii	Y	
DC	Flomatic	DCV	1	H	4-May-1994	4-May-2015	N	8	ii	Y	
DC	Flomatic	DCV	1 1/2	H	10-May-1995	10-May-2013	N	8	ii	Y	
DC	Flomatic	DCV	2	H	10-May-1995	10-May-2013	N	8	ii	Y	
DC	Flomatic	DCV	2 1/2	H	14-Feb-1997	14-Feb-2015	N	8	(gg),hh,jj,kk,ll,mm,yy,zz,ccc,ddd	Y	
DC	Flomatic	DCV	3	H	14-Feb-1997	14-Feb-2015	N	8	(gg),hh,jj,kk,ll,mm,yy,zz,ccc,ddd	Y	
DC	Flomatic	DCV	4	H	1-Jul-1999	1-Jul-2014	N	9	(gg),hh,jj,kk,ll,mm,yy,zz,ccc,ddd,ddddd	Y	
DC	Flomatic	DCV	4	H	1-Jul-1999	1-Jul-2014	Y	9	ddddd	Y	
DC	Flomatic	DCV	6	H	31-Jan-2002	31-Jan-2014	N	9	(gg),hh,jj,kk,ll,mm,yy,zz,ccc,ddd,ddddd	Y	
DC	Flomatic	DCV	6	H	31-Jan-2002	31-Jan-2014	Y	9	ddddd	Y	
DC	Flomatic	DCV	8	H	9-Nov-2004	9-Nov-2013	N	9	(mm), hh, jj, kk, ll, gg, yy, zz, ccc, ddd	Y	
DC	Flomatic	DCVE	3/4	H	7-Jun-2001	7-Jun-2013	Y	8	(hhhhh)	Y	
DC	Flomatic	DCVE	1	H	7-Jun-2001	7-Jun-2013	Y	8	(hhhhh)	Y	
DC	Flomatic	DCVE	1 1/2	H	7-Jun-2001	7-Jun-2013	Y	8	(hhhhh)	Y	
DC	Flomatic	DCVE	2	H	7-Jun-2001	7-Jun-2013	Y	8	(hhhhh)	Y	
DC	Hersey	2	3	H	27-Dec-1978	27-Dec-2014	N	5	tt,bb,qq,iii,lll	Y	
DC	Hersey	2	4	H	27-Dec-1978	27-Dec-2014	N	5	tt,bb,qq,iii,lll	Y	
DC	Hersey	2	6	H	22-Dec-1978	22-Dec-2014	N	5	tt,bb,qq,iii,lll	Y	
DC	Hersey	2	8	H	6-Jul-1981	6-Jul-2014	N	6	tt,bb,qq,iii,lll	Y	
DC	Hersey	2	10	H	19-Feb-1982	19-Feb-2015	N	6	tt,bb,qq,iii,lll	Y	
DC	Neptune						N				
DC	Watts	709	4	VU	11-Mar-1996	11-Mar-2014	N	8	(oo),gg,hh,ll,mm,pp,tt,uu,ww,yy,eee,ffff,gggg	N	
DC	Watts	709	6	VU	5-Dec-1996	5-Dec-2014	N	8	(oo),gg,hh,ll,mm,pp,tt,uu,ww,yy,eee,ffff,gggg	N	
DC	Watts	709	8	VU	5-Dec-1996	5-Dec-2014	N	8	(oo),gg,hh,ll,mm,pp,tt,uu,ww,yy,eee,ffff,gggg	N	
DC	Watts	709	10	VU	5-Dec-1996	5-Dec-2014	N	8	(oo),gg,hh,ll,mm,pp,tt,uu,ww,yy,eee,ffff,gggg	N	
DC	Watts	757	2 1/2	H	29-Sep-2004	29-Sep-2013	N	9	(ppp),qqq,aaaa,bbbb	N	
DC	Watts	757	2 1/2	H	29-Sep-2004	29-Sep-2013	Y	9	yyy,zzz,dddd,eeee,gggg,kkkk,llll,mmmm,nnnn,nnnnn	N	
DC	Watts	757	2 1/2	VU	29-Sep-2004	29-Sep-2013	N	9	(ppp),qqq,aaaa,bbbb	N	
DC	Watts	757	2 1/2	VU	29-Sep-2004	29-Sep-2013	Y	9	yyy,zzz,dddd,eeee,gggg,kkkk,llll,mmmm,nnnn,nnnnn	N	
DC	Watts	757	3	H	29-Sep-2004	29-Sep-2013	N	9	(ppp),qqq,aaaa,bbbb	N	
DC	Watts	757	3	H	29-Sep-2004	29-Sep-2013	Y	9	yyy,zzz,dddd,eeee,gggg,kkkk,llll,mmmm,nnnn,nnnnn	N	
DC	Watts	757	3	VU	29-Sep-2004	29-Sep-2013	N	9	(ppp),qqq,aaaa,bbbb	N	
DC	Watts	757	3	VU	29-Sep-2004	29-Sep-2013	Y	9	yyy,zzz,dddd,eeee,gggg,kkkk,llll,mmmm,nnnn,nnnnn	N	
DC	Watts	757	4	H	29-Sep-2004	29-Sep-2013	N	9	(ppp),qqq,aaaa,bbbb	N	
DC	Watts	757	4	H	29-Sep-2004	29-Sep-2013	Y	9	yyy,zzz,dddd,eeee,gggg,kkkk,llll,mmmm,nnnn,nnnnn	N	
DC	Watts	757	4	VU	29-Sep-2004	29-Sep-2013	N	9	(ppp),qqq,aaaa,bbbb	N	
DC	Watts	757	4	VU	29-Sep-2004	29-Sep-2013	Y	9	yyy,zzz,dddd,eeee,gggg,kkkk,llll,mmmm,nnnn,nnnnn	N	
DC	Watts	757	6	H	21-Apr-2006	21-Apr-2015	N	9	(ppp),qqq,aaaa,bbbb	N	
DC	Watts	757	6	H	21-Apr-2006	21-Apr-2015	Y	9	yyy,zzz,dddd,eeee,gggg,kkkk,llll,mmmm,nnnn,nnnnn	N	
DC	Watts	757	6	VU	21-Apr-2006	21-Apr-2015	N	9	(ppp),qqq,aaaa,bbbb	N	
DC	Watts	757	6	VU	21-Apr-2006	21-Apr-2015	Y	9	yyy,zzz,dddd,eeee,gggg,kkkk,llll,mmmm,nnnn,nnnnn	N	
DC	Watts	757	8	H	16-Sep-2004	16-Sep-2013	N	9	(ppp),qqq,aaaa,bbbb	N	
DC	Watts	757	8	H	16-Sep-2004	16-Sep-2013	Y	9	yyy,zzz,dddd,eeee,gggg,kkkk,llll,mmmm,nnnn,nnnnn	N	
DC	Watts	757	8	VU	10-Feb-2006	10-Feb-2015	N	9	(ppp),qqq,aaaa,bbbb	N	
DC	Watts	757	8	VU	10-Feb-2006	10-Feb-2015	Y	9	yyy,zzz,dddd,eeee,gggg,kkkk,llll,mmmm,nnnn,nnnnn	N	
DC	Watts	757	10	H	2-May-2008	2-May-2014	N	9	(ppp),qqq,aaaa,bbbb	N	
DC	Watts	757	10	H	2-May-2008	2-May-2014	Y	9	yyy,zzz,dddd,eeee,gggg,kkkk,llll,mmmm,nnnn,nnnnn	N	
DC	Watts	757	10	VU	2-May-2008	2-May-2014	N	9	(ppp),qqq,aaaa,bbbb	N	
DC	Watts	757	10	VU	2-May-2008	2-May-2014	Y	9	yyy,zzz,dddd,eeee,gggg,kkkk,llll,mmmm,nnnn,nnnnn	N	
DC	Watts	767	2 1/2	H	29-Sep-2004	29-Sep-2013	N	9	(ppp),qqq,yyy,zzz,aaaa,bbbb,dddd,eeee,gggg,kkkk,llll,mmmm,nnnn,nnnnn	N	
DC	Watts	767	2 1/2	VU	29-Sep-2004	29-Sep-2013	N	9	(ppp),qqq,yyy,zzz,aaaa,bbbb,dddd,eeee,gggg,kkkk,llll,mmmm,nnnn,nnnnn	N	
DC	Watts	767	3	H	29-Sep-2004	29-Sep-2013	N	9	(ppp),qqq,yyy,zzz,aaaa,bbbb,dddd,eeee,gggg,kkkk,llll,mmmm,nnnn,nnnnn	N	
DC	Watts	767	3	VU	29-Sep-2004	29-Sep-2013	N	9	(ppp),qqq,yyy,zzz,aaaa,bbbb,dddd,eeee,gggg,kkkk,llll,mmmm,nnnn,nnnnn	N	
DC	Watts	767	4	H	21-Apr-2006	21-Apr-2015	N	9	(ppp),qqq,yyy,zzz,aaaa,bbbb,dddd,eeee,gggg,kkkk,llll,mmmm,nnnn,nnnnn	N	
DC	Watts	767	4	VU	21-Apr-2006	21-Apr-2015	N	9	(ppp),qqq,yyy,zzz,aaaa,bbbb,dddd,eeee,gggg,kkkk,llll,mmmm,nnnn,nnnnn	N	
DC	Watts	767	6	H	16-Sep-2004	16-Sep-2013	N	9	(yyy),ppp,qqq,zzz,aaaa,bbbb,dddd,eeee,gggg,kkkk,llll,mmmm,nnnn,nnnnn	N	
DC	Watts	767	6	VU	10-Feb-2006	10-Feb-2015	N	9	(yyy),ppp,qqq,zzz,aaaa,bbbb,dddd,eeee,gggg,kkkk,llll,mmmm,nnnn,nnnnn	N	
DC	Watts	767	8	H	2-May-2008	2-May-2014	N	9	(yyy), ppp, qqq,zzz, aaaa, bbbb, dddd, eeee, ffff, gggg,nnnnn	N	
DC	Watts	767	8	VU	2-May-2008	2-May-2014	N	9	(yyy), ppp, qqq,zzz, aaaa, bbbb, dddd, eeee, ffff, gggg,nnnnn	N	
DC	Watts	767	10	H	20-Oct-2008	20-Oct-2014	N	9	(ppp),qqq,yyy,zzz,aaaa,bbbb,dddd,eeee,gggg	N	
DC	Watts	767	10	VU	20-Oct-2008	20-Oct-2014	N	9	(ppp),qqq,yyy,zzz,aaaa,bbbb,dddd,eeee,gggg	N	
DC	Watts	774	8	H	16-Sep-1996	16-Sep-2014	N	8	(tt),ee,ff,gg,hh,pp,uu,ccc,ddd	N	
DC	Watts	774	8	H	16-Sep-1996	16-Sep-2014	Y	8	ll,mm,oo,fff,gggg	N	
DC	Watts	774	10	H	16-Feb-2001	16-Feb-2016	Y	8	(ll),mm,fff,gggg	N	
DC	Watts	774	12	H	12-Jan-2010	12-Jan-2016	N	9	hh,gg	N	
DC	Watts	774	12	H	12-Jan-2010	12-Jan-2016	N	9	(ll),mm	N	
DC	Watts	007	2 1/2	H	30-Sep-1990	30-Sep-2014	N	8	(oo),gg,hh,ll,mm,pp,tt,uu,yy,ffff,gggg	N	
DC	Watts	007	2 1/2	VU	27-Aug-1996	27-Aug-2014	Y	8	(oo),gg,hh,ll,mm,pp,tt,uu,yy,ffff,gggg	N	
DC	Watts	007	3	H	30-Sep-1990	30-Sep-2014	N	8	(oo),gg,hh,ll,mm,pp,tt,uu,yy,eee,ffff,gggg	N	
DC	Watts	007	3	VU	27-Aug-1996	27-Aug-2014	Y	8	(oo),gg,hh,ll,mm,pp,tt,uu,yy,eee,ffff,gggg	N	
DC	Watts	007M1-FP	1	H	1-Sep-2009	1-Sep-2015	Y	9	(eeeee)	N	
DC	Watts	007M1-FP	2	H	1-Sep-2009	1-Sep-2015	Y	9	(eeeee)	N	
DC	Watts	007M1PCQT	3/4	H	10-Dec-1993	10-Dec-2014	Y	8	(vv),xx,ooo,hhhh,pppp	N	
DC	Watts	007M1PCQT	1	H	10-Dec-1993	10-Dec-2014	Y	8	(vv),xx,ooo,hhhh,pppp	N	
DC	Watts	007M1PCQT	1 1/2	H	27-Sep-1994	27-Sep-2015	Y	8	vv,xx,ooo,hhhh,pppp	Y	
DC	Watts	007M1PCQT	2	H	27-Sep-1994	27-Sep-2015	N	8	(vv),xx,ooo,hhhh,pppp	N	
DC	Watts	007M1QT	3/4	H	26-Feb-1991	26-Feb-2015	N	8	vv,xx,ooo,hhhh,pppp	Y	
DC	Watts	007M1QT	1	H	18-May-1998	18-May-2013	N	9	(vv),xx,ooo,hhhh,pppp	N	
DC	Watts	007M1QT	1	H	26-Feb-1991	26-Feb-2015	N	8	(vv),xx,ooo,hhhh,pppp	N	
DC	Watts	007M1QT	1	VU	18-May-1998	18-May-2013	N	9	(vv),xx,ooo,hhhh,pppp	N	
DC	Watts	007M1QT	1 1/2	H	30-Jun-1992	30-Jun-2013	N	8	vv,xx,ooo,hhhh,pppp	Y	
DC	Watts	007M1QT	2	H	30-Jun-1992	30-Jun-2013	N	8	(vv),xx,ooo,hhhh,pppp	N	
DC	Watts	007M1QT	2	VU	8-Mar-1996	8-Mar-2014	N	8	(vv),xx,ooo,hhhh,pppp	N	
DC	Watts	007M2-FP	1 1/4	H	1-Sep-2009	1-Sep-2015	N	9	(eeeee)	N	
DC	Watts	007M2-FP	1 1/2	H	1-Sep-2009	1-Sep-2015	N	9	(eeeee)	N	
DC	Watts	007M2PCQT	1 1/4	H	9-Dec-1996	9-Dec-2014	N	8	(vv),xx,ooo,hhhh,pppp	N	
DC	Watts	007M2PCQT	1 1/4	VU	9-Dec-1996	9-Dec-2014	N	8	(vv),xx,ooo,hhhh,pppp	N	
DC	Watts	007M2PCQT	1 1/2	H	12-Sep-1994	12-Sep-2015	N	8	(vv),xx,ooo,hhhh,pppp	N	
DC	Watts	007M2QT	3/4	H	5-Apr-1993	5-Apr-2014	N	8	(vv),xx,ooo,hhhh,pppp	N	
DC	Watts	007M2QT	3/4	VU	27-Aug-1996	27-Aug-2014	N	8	(vv),xx,ooo,hhhh,pppp	N	
DC	Watts	007M2QT	1 1/4	H	1-Oct-1996	1-Oct-2014	N	8	(vv),xx,ooo,hhhh,pppp	N	
DC	Watts	007M2QT	1 1/4	VU	1-Oct-1996	1-Oct-2014	N	8	(vv),xx,ooo,hhhh,pppp	N	
DC	Watts	007M2QT	1 1/2	H	24-May-1994	24-May-2015	N	8	(vv),xx,ooo,hhhh,pppp	N	
DC	Watts	007M2QT	1 1/2	VU	11-Mar-1996	11-Mar-2014	N	8	(vv),xx,ooo,hhhh,pppp	N	
DC	Watts	007M3-FP	3/4	H	1-Sep-2009	1-Sep-2015	N	9	(eeeee)	N	
DC	Watts	007M3QT	3/4	H	18-Oct-1999	18-Oct-2014	N	9	(vv),xx,ooo,hhhh,pppp	N	

Type	Manufacturer	Model	Size	Orientation(s)	Approved	Renewed	≤0.25% Pb	Manual	Shutoffs	Spare Parts	Bypass
DC	Watts	007M3QT	3/4	VU	18-Oct-1999	18-Oct-2014	N	9	(vv),xx,ooo,hhhh,pppp	N	
DC	Watts	007PCQT	1/2	H	17-Feb-1995	17-Feb-2016	N	8	(vv),xx,ooo,hhhh,pppp	N	
DC	Watts	007PCQT	1 1/2	H	27-Sep-1994	27-Sep-2015	N	8	vv,xx,ooo,hhhh,pppp	Y	
DC	Watts	007PCQT	2	H	27-Sep-1994	27-Sep-2015	N	8	vv,xx,ooo,hhhh,pppp	Y	
DC	Watts	007QT	1/2	H	6-Dec-1993	8-Dec-2014	N	8	(vv),xx,ooo,hhhh,pppp,rrrrr	N	
DC	Watts	007QT	1/2	H	16-Jun-1997	16-Jun-2015	N	9	(vv),xx,ooo,hhhh,pppp,rrrrr	N	
DC	Watts	007QT	1/2	VU	19-Apr-1996	19-Apr-2014	N	8	pppp,rrrrr	N	
DC	Watts	007QT	1/2	VU	16-Jun-1997	16-Jun-2015	N	9	(vv),xx,pppp,rrrrr	N	
DC	Watts	007QT	3/4	H	11-Jan-1988	11-Jan-2015	N	7	pppp,rrrrr	Y	
DC	Watts	007QT	1	H	11-Jan-1988	11-Jan-2015	N	7	pppp,rrrrr	Y	
DC	Watts	007QT	1 1/2	H	21-Jul-1988	21-Jul-2015	N	7	pppp,rrrrr	Y	
DC	Watts	007QT	2	H	21-Jul-1988	21-Jul-2015	N	7	pppp,rrrrr	Y	
DC	Watts	007SSM1PCQT	3/4	H	10-Dec-1993	10-Dec-2014	N	8	vv,xx,ooo,hhhh,pppp	Y	
DC	Watts	007SSM1PCQT	1	H	10-Dec-1993	10-Dec-2014	N	8	vv,xx,ooo,hhhh,pppp	Y	
DC	Watts	007SSM1QT	3/4	H	26-Feb-1991	26-Feb-2015	N	8	vv,xx,ooo,hhhh,pppp	Y	
DC	Watts	007SSM1QT	1	H	26-Feb-1991	26-Feb-2015	N	8	vv,xx,ooo,hhhh,pppp	Y	
DC	Watts	007SSPCQT	1 1/2	H	27-Sep-1994	27-Sep-2015	N	8	vv,xx,ooo,hhhh,pppp	Y	
DC	Watts	007SSPCQT	2	H	27-Sep-1994	27-Sep-2015	N	8	vv,xx,ooo,hhhh,pppp	Y	
DC	Watts	007SSQT	3/4	H	11-Jan-1988	11-Jan-2015	N	7	pppp	Y	
DC	Watts	007SSQT	1	H	11-Jan-1988	11-Jan-2015	N	7	pppp	Y	
DC	Watts	007SSQT	1 1/2	H	21-Jul-1988	21-Jul-2015	N	7	pppp	Y	
DC	Watts	007SSQT	2	H	21-Jul-1988	21-Jul-2015	N	7	pppp	Y	
DC	Watts	700	2 1/2	H	10-Jan-1981	10-Jan-2014	N	5		Y	
DC	Watts	700	3	H	10-Jan-1981	10-Jan-2014	N	5		Y	
DC	Watts	709	2 1/2	H	12-Jun-1986	12-Jun-2013	N	7	(oo),gg,hh,ll,mm,pp,tt,uu,ww,yy,ffff,gggg	N	
DC	Watts	709	3	H	12-Jun-1986	12-Jun-2013	N	7	(oo),gg,hh,ll,mm,pp,tt,uu,ww,yy,eee,ffff,gggg	N	
DC	Watts	709	4	H	15-Jan-1982	15-Jan-2015	N	6	(oo),gg,hh,ll,mm,pp,tt,uu,ww,yy,eee,ffff,gggg	N	
DC	Watts	709	6	H	18-May-1982	18-May-2015	N	6	(oo),gg,hh,ll,mm,pp,tt,uu,ww,yy,eee,ffff,gggg	N	
DC	Watts	709	8	H	6-Jul-1981	6-Jul-2014	N	6	(oo),gg,hh,ll,mm,pp,tt,uu,ww,yy,eee,ffff,gggg	N	
DC	Watts	709	10	H	16-Mar-1983	16-Mar-2016	N	6	(oo),gg,hh,ll,mm,pp,tt,uu,ww,yy,eee,ffff,gggg	N	
DC	Watts	709BB	2 1/2	H	20-Jul-1982	20-Jul-2015	N	6	(oo),gg,hh,ll,mm,pp,tt,uu,yy,ffff,gggg	N	
DC	Watts	709BB	3	H	20-Jul-1982	20-Jul-2015	N	6	(oo),gg,hh,ll,mm,pp,tt,uu,yy,ffff,gggg	N	
DC	Watts	709QT	3/4	H	4-Aug-1982	4-Aug-2015	N	6	vv,xx,ooo,hhhh,pppp	Y	
DC	Watts	709QT	1	H	4-Aug-1982	4-Aug-2015	N	6	vv,xx,ooo,hhhh,pppp	Y	
DC	Watts	709QT	1 1/2	H	27-Apr-1982	21-Apr-2015	N	6	vv,xx,ooo,hhhh,pppp	Y	
DC	Watts	709QT	2	H	27-Apr-1982	21-Apr-2015	N	6	vv,xx,ooo,hhhh,pppp	Y	
DC	Watts	719AQT	1/2	VUVD	4-Oct-2005	4-Oct-2014	N	9	(vv),xx,ooo,hhhh,pppp,rrrrr	N	
DC	Watts	719AQT	1	VUVD	4-Oct-2005	4-Oct-2014	N	9	(vv),xx,ooo,hhhh,pppp,rrrrr	N	
DC	Watts	719AQT	1 1/4	VUVD	4-Oct-2005	4-Oct-2014	N	9	(vv),xx,ooo,hhhh,pppp,rrrrr	N	
DC	Watts	719AQT	1 1/2	VUVD	4-Oct-2005	4-Oct-2014	N	9	(vv),xx,ooo,hhhh,pppp,rrrrr	N	
DC	Watts	719AQT	2	VUVD	4-Oct-2005	4-Oct-2014	N	9	(vv),xx,ooo,hhhh,pppp,rrrrr	N	
DC	Watts	719AQTR10	1/2	VUVD	3-Jul-2013		N	9	(vv),xx,ooo,hhhh,pppp	N	
DC	Watts	719AQTR10	3/4	VUVD	3-Jul-2013		N	9	(vv),xx,ooo,hhhh,pppp	N	
DC	Watts	719QT	1/2	H	4-Oct-2005	4-Oct-2014	N	9	(vv),xx,ooo,hhhh,pppp,rrrrr	N	
DC	Watts	719QT	1/2	VD	4-Oct-2005	4-Oct-2014	N	9	(vv),xx,ooo,hhhh,pppp,rrrrr	N	
DC	Watts	719QT	1/2	VU	4-Oct-2005	4-Oct-2014	N	9	(vv),xx,ooo,hhhh,pppp,rrrrr	N	
DC	Watts	719QT	3/4	H	4-Oct-2005	4-Oct-2014	N	9	(vv),xx,ooo,hhhh,pppp,rrrrr	N	
DC	Watts	719QT	3/4	VD	4-Oct-2005	4-Oct-2014	N	9	(vv),xx,ooo,hhhh,pppp,rrrrr	N	
DC	Watts	719QT	3/4	VU	4-Oct-2005	4-Oct-2014	N	9	(vv),xx,ooo,hhhh,pppp,rrrrr	N	
DC	Watts	719QT	1	H	4-Oct-2005	4-Oct-2014	N	9	(vv),xx,ooo,hhhh,pppp,rrrrr	N	
DC	Watts	719QT	1	VD	4-Oct-2005	4-Oct-2014	N	9	(vv),xx,ooo,hhhh,pppp,rrrrr	N	
DC	Watts	719QT	1	VU	4-Oct-2005	4-Oct-2014	N	9	(vv),xx,ooo,hhhh,pppp,rrrrr	N	
DC	Watts	719QT	1 1/4	H	4-Oct-2005	4-Oct-2014	N	9	(vv),xx,ooo,hhhh,pppp,rrrrr	N	
DC	Watts	719QT	1 1/4	VD	4-Oct-2005	4-Oct-2014	N	9	(vv),xx,ooo,hhhh,pppp,rrrrr	N	
DC	Watts	719QT	1 1/4	VU	4-Oct-2005	4-Oct-2014	N	9	(vv),xx,ooo,hhhh,pppp,rrrrr	N	
DC	Watts	719QT	1 1/2	H	4-Oct-2005	4-Oct-2014	N	9	(vv),xx,ooo,hhhh,pppp,rrrrr	N	
DC	Watts	719QT	1 1/2	VD	4-Oct-2005	4-Oct-2014	N	9	(vv),xx,ooo,hhhh,pppp,rrrrr	N	
DC	Watts	719QT	1 1/2	VU	4-Oct-2005	4-Oct-2014	N	9	(vv),xx,ooo,hhhh,pppp,rrrrr	N	
DC	Watts	719QT	2	H	4-Oct-2005	4-Oct-2014	N	9	(vv),xx,ooo,hhhh,pppp,rrrrr	N	
DC	Watts	719QT	2	VD	4-Oct-2005	4-Oct-2014	N	9	(vv),xx,ooo,hhhh,pppp,rrrrr	N	
DC	Watts	719QT	2	VU	4-Oct-2005	4-Oct-2014	N	9	(vv),xx,ooo,hhhh,pppp,rrrrr	N	
DC	Watts	719QTR10	1/2	H	4-Oct-2005	4-Oct-2014	N	9	(vv),xx,ooo,hhhh,pppp,rrrrrr	N	
DC	Watts	719QTR10	1/2	VD	4-Oct-2005	4-Oct-2014	N	9	(vv),xx,ooo,hhhh,pppp,rrrrrr	N	
DC	Watts	719QTR10	1/2	VU	4-Oct-2005	4-Oct-2014	N	9	(vv),xx,ooo,hhhh,pppp,rrrrrr	N	
DC	Watts	719QTR10	3/4	H	4-Oct-2005	4-Oct-2014	N	9	(vv),xx,ooo,hhhh,pppp,rrrrrr	N	
DC	Watts	719QTR10	3/4	VD	4-Oct-2005	4-Oct-2014	N	9	(vv),xx,ooo,hhhh,pppp,rrrrrr	N	
DC	Watts	719QTR10	3/4	VU	4-Oct-2005	4-Oct-2014	N	9	(vv),xx,ooo,hhhh,pppp,rrrrrr	N	
DC	Watts	757a	2 1/2	H	7-Oct-2002	7-Oct-2014	N	9	(ppp),qqq,yyy,zzz,aaaa,bbbb,dddd,eeee,gggg,kkkk,llll,mmmm,nnnn,nnnnn	N	
DC	Watts	757a	2 1/2	VU	7-Oct-2002	7-Oct-2014	N	9	(ppp),qqq,yyy,zzz,aaaa,bbbb,dddd,eeee,gggg,kkkk,llll,mmmm,nnnn,nnnnn	N	
DC	Watts	757a	3	H	7-Oct-2002	7-Oct-2014	N	9	(ppp),qqq,yyy,zzz,aaaa,bbbb,dddd,eeee,gggg,kkkk,llll,mmmm,nnnn,nnnnn	N	
DC	Watts	757a	3	VU	7-Oct-2002	7-Oct-2014	N	9	(ppp),qqq,yyy,zzz,aaaa,bbbb,dddd,eeee,gggg,kkkk,llll,mmmm,nnnn,nnnnn	N	
DC	Watts	757a	4	H	7-Oct-2002	7-Oct-2014	N	9	(ppp),qqq,yyy,zzz,aaaa,bbbb,dddd,eeee,gggg,kkkk,llll,mmmm,nnnn,nnnnn	N	
DC	Watts	757a	4	VU	7-Oct-2002	7-Oct-2014	N	9	(ppp),qqq,yyy,zzz,aaaa,bbbb,dddd,eeee,gggg,kkkk,llll,mmmm,nnnn,nnnnn	N	
DC	Watts	757a	6	H	3-Jul-2003	3-Jul-2015	N	9	(ppp),qqq,yyy,zzz,aaaa,bbbb,dddd,eeee,gggg,kkkk,llll,mmmm,nnnn,nnnnn	N	
DC	Watts	757a	6	VU	3-Jul-2003	3-Jul-2015	N	9	(ppp),qqq,yyy,zzz,aaaa,bbbb,dddd,eeee,gggg,kkkk,llll,mmmm,nnnn,nnnnn	N	
DC	Watts	757N	2 1/2	VUVD	7-Apr-2009	7-Apr-2015	N	9	(ppp),qqq,nnnnn	N	
DC	Watts	757N	2 1/2	VUVD	7-Apr-2009	7-Apr-2015	Y	9	yyy,zzz,dddd,eeee,dddd,gggg,kkkk,llll,mmmm,nnnn	N	
DC	Watts	757N	3	VUVD	7-Apr-2009	7-Apr-2015	N	9	(ppp),qqq,nnnnn	N	
DC	Watts	757N	3	VUVD	7-Apr-2009	7-Apr-2015	Y	9	yyy,zzz,dddd,eeee,dddd,gggg,kkkk,llll,mmmm,nnnn	N	
DC	Watts	757N	4	VUVD	7-Apr-2009	7-Apr-2015	N	9	(ppp),qqq,nnnnn	N	
DC	Watts	757N	4	VUVD	7-Apr-2009	7-Apr-2015	Y	9	yyy,zzz,dddd,eeee,dddd,gggg,kkkk,llll,mmmm,nnnn	N	
DC	Watts	757N	6	VUVD	7-Apr-2009	7-Apr-2015	N	9	(ppp),qqq,nnnnn	N	
DC	Watts	757N	6	VUVD	7-Apr-2009	7-Apr-2015	Y	9	yyy,zzz,dddd,eeee,dddd,gggg,kkkk,llll,mmmm,nnnn	N	
DC	Watts	757N	8	VUVD	3-Jan-2013	3-Jan-2016	N	9	ppp,qqq,aaaa,bbbb	N	
DC	Watts	757N	8	VUVD	3-Jan-2013	3-Jan-2016	Y	9	yyy, zzz,dddd,eeee,gggg,kkkk,llll,mmmm,nnnn	N	
DC	Watts	757N	10	VUVD	1-Sep-2009	1-Sep-2015	N	9	(ppp),qqq	N	
DC	Watts	757N	10	VUVD	1-Sep-2009	1-Sep-2015	Y	9	yyy,zzz,dddd,eeee,dddd,gggg,kkkk,llll,mmmm,nnnn	N	
DC	Watts	757Na	2 1/2	VUVD	20-Mar-2003	20-Mar-2015	N	9	(ppp),qqq,yyy,zzz,aaaa,bbbb,dddd,eeee,gggg,kkkk,llll,mmmm,nnnn,nnnnn	N	
DC	Watts	757Na	3	VUVD	20-Mar-2003	20-Mar-2015	N	9	(ppp),qqq,yyy,zzz,aaaa,bbbb,dddd,eeee,gggg,kkkk,llll,mmmm,nnnn,nnnnn	N	
DC	Watts	757Na	4	VUVD	20-Mar-2003	20-Mar-2015	N	9	(ppp),qqq,yyy,zzz,aaaa,bbbb,dddd,eeee,gggg,kkkk,llll,mmmm,nnnn,nnnnn	N	
DC	Watts	757Na	6	VUVD	3-Jul-2003	3-Jul-2015	N	9	(ppp),qqq,yyy,zzz,aaaa,bbbb,dddd,eeee,gggg,kkkk,llll,mmmm,nnnn,nnnnn	N	
DC	Watts	757NQT	2 1/2	VUVD	4-Dec-2009	4-Dec-2015	Y	9	ffffff	N	
DC	Watts	757NQT	3	VUVD	4-Dec-2009	4-Dec-2015	Y	9	ffffff	N	
DC	Watts	757NQT	4	VUVD	4-Dec-2009	4-Dec-2015	Y	9	ffffff	N	
DC	Watts	757QT	2 1/2	H	4-Dec-2009	4-Dec-2015	Y	9	ffffff	N	
DC	Watts	757QT	2 1/2	VU	4-Dec-2009	4-Dec-2015	Y	9	ffffff	N	
DC	Watts	757QT	3	H	4-Dec-2009	4-Dec-2015	Y	9	ffffff	N	
DC	Watts	757QT	3	VU	4-Dec-2009	4-Dec-2015	Y	9	ffffff	N	
DC	Watts	757QT	4	H	4-Dec-2009	4-Dec-2015	Y	9	ffffff	N	
DC	Watts	757QT	4	VU	4-Dec-2009	4-Dec-2015	Y	9	ffffff	N	
DC	Watts	767a	2 1/2	H	7-Oct-2002	7-Oct-2014	N	9	(ppp),qqq,yyy,zzz,aaaa,bbbb,dddd,eeee,gggg,kkkk,llll,mmmm,nnnn,nnnnn	N	
DC	Watts	767a	2 1/2	VU	7-Oct-2002	7-Oct-2014	N	9	(ppp),qqq,yyy,zzz,aaaa,bbbb,dddd,eeee,gggg,kkkk,llll,mmmm,nnnn,nnnnn	N	
DC	Watts	767a	3	H	7-Oct-2002	7-Oct-2014	N	9	(ppp),qqq,yyy,zzz,aaaa,bbbb,dddd,eeee,gggg,kkkk,llll,mmmm,nnnn,nnnnn	N	
DC	Watts	767a	3	VU	7-Oct-2002	7-Oct-2014	N	9	(ppp),qqq,yyy,zzz,aaaa,bbbb,dddd,eeee,gggg,kkkk,llll,mmmm,nnnn,nnnnn	N	
DC	Watts	767a	4	H	3-Jul-2003	3-Jul-2015	N	9	(ppp),qqq,yyy,zzz,aaaa,bbbb,dddd,eeee,gggg,kkkk,llll,mmmm,nnnn,nnnnn	N	
DC	Watts	767a	4	VU	3-Jul-2003	3-Jul-2015	N	9	(ppp),qqq,yyy,zzz,aaaa,bbbb,dddd,eeee,gggg,kkkk,llll,mmmm,nnnn,nnnnn	N	
DC	Watts	767N	2 1/2	VUVD	7-Apr-2009	7-Apr-2015	N	9	(ppp),qqq,yyy,zzz,dddd,eeee,dddd,gggg,kkkk,llll,mmmm,nnnn,nnnnn	N	
DC	Watts	767N	3	VUVD	7-Apr-2009	7-Apr-2015	N	9	(ppp),qqq,yyy,zzz,dddd,eeee,dddd,gggg,kkkk,llll,mmmm,nnnn,nnnnn	N	
DC	Watts	767N	4	VUVD	7-Apr-2009	7-Apr-2015	N	9	(ppp),qqq,yyy,zzz,dddd,eeee,dddd,gggg,kkkk,llll,mmmm,nnnn,nnnnn	N	
DC	Watts	767N	6	VUVD	3-Jan-2013	3-Jan-2016	N	9	ppp,qqq,aaaa,bbbb	N	
DC	Watts	767N	6	VUVD	3-Jan-2013	3-Jan-2016	Y	9	yyy,zzz,dddd,eeee,gggg,kkkk,llll,mmmm,nnnn	N	
DC	Watts	767N	8	VUVD	1-Sep-2009	1-Sep-2015	N	9	(ppp),qqq,yyy,zzz,dddd,eeee,dddd,gggg,kkkk,llll,mmmm,nnnn,nnnnn	N	
DC	Watts	767Na	2 1/2	VUVD	20-Mar-2003	20-Mar-2015	N	9	(ppp),qqq,yyy,zzz,aaaa,bbbb,dddd,eeee,gggg,kkkk,llll,mmmm,nnnn,nnnnn	N	
DC	Watts	767Na	3	VUVD	20-Mar-2003	20-Mar-2015	N	9	(ppp),qqq,yyy,zzz,aaaa,bbbb,dddd,eeee,gggg,kkkk,llll,mmmm,nnnn,nnnnn	N	
DC	Watts	767Na	4	VUVD	3-Jul-2003	3-Jul-2015	N	9	(ppp),qqq,yyy,zzz,aaaa,bbbb,dddd,eeee,gggg,kkkk,llll,mmmm,nnnn,nnnnn	N	
DC	Watts	770	4	H	20-May-1992	20-May-2013	N	8	oo,gg,hh,ll,mm,pp,tt,uu,yy	Y	
DC	Watts	770	8	H	13-Jan-1993	13-Jan-2014	N	8	oo,gg,hh,ll,mm,pp,tt,uu,yy	Y	
DC	Watts	770QTFDA	4	H	12-Jan-1993	13-Jan-2014	N	8	ww	Y	
DC	Watts	770QTFDA	8	H	12-Jan-1993	13-Jan-2014	N	8	ww	Y	
DC	Watts	772	4	H	1-Jul-1992	1-Jul-2013	N	8	oo,yy	Y	
DC	Watts	772	10	H	13-Jan-1993	13-Jan-2014	N	8	oo,yy	Y	
DC	Watts	774	2 1/2	H	11-Jul-1991	11-Jul-2015	N	8	(tt),ee,ff,gg,hh,pp,uu,ccc,ddd	N	
DC	Watts	774	2 1/2	H	11-Jul-1991	11-Jul-2015	Y	8	ll,mm,oo,ffff,gggg	N	
DC	Watts	774	3	H	11-Jul-1991	11-Jul-2015	N	8	(tt),ee,ff,gg,hh,pp,uu,ccc,ddd	N	
DC	Watts	774	3	H	11-Jul-1991	11-Jul-2015	Y	8	ll,mm,oo,ffff,gggg	N	

Type	Manufacturer	Model	Size	Orientation(s)	Approved	Renewed	≤0.25% Pb	Manual	Shutoffs	Spare Parts	Bypass
DC	Watts	774	4	H	11-Jul-1991	11-Jul-2015	N	8	(tt),ee,ff,gg,hh,pp,uu,ccc,ddd	N	
DC	Watts	774	4	H	11-Jul-1991	11-Jul-2015	Y	8	ll,mm,oo,ffff,gggg	N	
DC	Watts	774	6	H	9-Sep-1992	9-Sep-2013	N	8	(tt),ee,ff,gg,hh,pp,uu,ccc,ddd	N	
DC	Watts	774	6	H	9-Sep-1992	9-Sep-2013	Y	8	ll,mm,oo,ffff,gggg	N	
DC	Watts	774	12	VU	21-Mar-2011	21-Mar-2014	N	9	pp,	N	
DC	Watts	774	12	VU	21-Mar-2011	21-Mar-2014	Y	9	(ll),mm,oo	N	
DC	Watts	774X	2 1/2	H	10-Sep-1996	10-Sep-2014	N	8	(mm),ee,ff,gg,hh,ll,oo,pp,tt,uu,ccc,ddd,ffff,gggg	N	
DC	Watts	774X	6	H	22-Nov-1993	22-Nov-2014	N	8	tt,ee,ff,gg,hh,ll,mm,oo,pp,uu,ccc,ddd,ffff,gggg	Y	
DC	Watts	774X	8	H	9-Sep-1992	9-Sep-2013	N	8	tt,ee,ff,gg,hh,ll,mm,oo,pp,uu,ccc,ddd,ffff,gggg	Y	
DC	Watts	775QT	1/2	H	1-Feb-2000	1-Feb-2015	N	9	int	Y	
DC	Watts	775QT	1/2	VU	1-Feb-2000	1-Feb-2015	N	9	int	Y	
DC	Watts	775QT	3/4	H	1-Feb-2000	1-Feb-2015	N	9	int	Y	
DC	Watts	775QT	3/4	VU	1-Feb-2000	1-Feb-2015	N	9	int	Y	
DC	Watts	775QT	1	H	12-Aug-1999	12-Aug-2014	N	9	int	Y	
DC	Watts	775QT	1	VU	12-Aug-1999	12-Aug-2014	N	9	int	Y	
DC	Watts	775QT	1 1/4	H	7-Sep-2000	7-Sep-2015	N	9	int	Y	
DC	Watts	775QT	1 1/4	VU	7-Sep-2000	7-Sep-2015	N	9	int	Y	
DC	Watts	775QT	1 1/2	H	7-Sep-2000	7-Sep-2015	N	9	int	Y	
DC	Watts	775QT	1 1/2	VU	7-Sep-2000	7-Sep-2015	N	9	int	Y	
DC	Watts	775QT	2	H	28-Mar-2002	28-Mar-2014	N	9	int	Y	
DC	Watts	775QT	2	VU	28-Mar-2002	28-Mar-2014	N	9	int	Y	
DC	Watts	LF007	2 1/2	H	12-Jan-2010	12-Jan-2016	Y	9	(oo)	N	
DC	Watts	LF007	3	H	12-Jan-2010	12-Jan-2016	Y	9	(oo)	N	
DC	Watts	LF007M1PCQT	1	H	13-Mar-2015		Y	9	(hhhh),rrrrr	N	
DC	Watts	LF007M1PCQT	1	VU	13-Mar-2015		Y	9	(hhhh),rrrrr	N	
DC	Watts	LF007M1PCQT	2	H	13-Mar-2015		Y	9	(hhhh),rrrrr	N	
DC	Watts	LF007M1PCQT	2	VU	13-Mar-2015		Y	9	(hhhh),rrrrr	N	
DC	Watts	LF007M1QT	1	H	11-Jan-2008	11-Jan-2014	Y	9	(hhhh),rrrrr	N	
DC	Watts	LF007M1QT	1	VU	11-Jan-2008	11-Jan-2014	Y	9	(hhhh),rrrrr	N	
DC	Watts	LF007M1QT	2	H	11-Jan-2008	11-Jan-2014	Y	9	(hhhh),rrrrr	N	
DC	Watts	LF007M1QT	2	VU	11-Jan-2008	11-Jan-2014	Y	9	(hhhh),rrrrr	N	
DC	Watts	LF007M2QT	1 1/4	H	11-Jan-2008	11-Jan-2014	Y	8	(hhhh),rrrrr	N	
DC	Watts	LF007M2QT	1 1/4	VU	11-Jan-2008	11-Jan-2014	Y	8	(hhhh),rrrrr	N	
DC	Watts	LF007M2QT	1 1/2	H	11-Jan-2008	11-Jan-2014	Y	8	(hhhh),rrrrr	N	
DC	Watts	LF007M2QT	1 1/2	VU	11-Jan-2008	11-Jan-2014	Y	8	(hhhh),rrrrr	N	
DC	Watts	LF007M3PCQT	3/4	H	13-Mar-2015		Y	9	(hhhh),rrrrr	N	
DC	Watts	LF007M3PCQT	3/4	VU	13-Mar-2015		Y	9	(hhhh),rrrrr	N	
DC	Watts	LF007M3QT	3/4	H	11-Jan-2008	11-Jan-2014	Y	9	(hhhh),rrrrr	N	
DC	Watts	LF007M3QT	3/4	VU	11-Jan-2008	11-Jan-2014	Y	9	(hhhh),rrrrr	N	
DC	Watts	LF007PCQT	1/2	H	13-Mar-2015		Y	9	(hhhh),rrrrr	N	
DC	Watts	LF007PCQT	1/2	VU	13-Mar-2015		Y	9	(hhhh),rrrrr	N	
DC	Watts	LF007QT	1/2	H	11-Jan-2008	11-Jan-2014	Y	9	(hhhh),rrrrr	N	
DC	Watts	LF007QT	1/2	VU	11-Jan-2008	11-Jan-2014	Y	9	(hhhh),rrrrr	N	
DC	Watts	LF709	2 1/2	H	12-Jan-2010	12-Jan-2016	Y	9	(ll),mm,oo,pp,zzz,cccc,dddd,eeee,ffff,gggg,nnnnn	N	
DC	Watts	LF709	3	H	12-Jan-2010	12-Jan-2016	Y	9	(ll),mm,oo,pp,zzz,cccc,dddd,eeee,ffff,gggg,nnnnn	N	
DC	Watts	LF709	4	H	27-Jul-2012	27-Jul-2015	Y	9	(ll),mm,oo,pp,zzz,cccc,dddd,eeee,ffff,gggg,nnnnn	N	
DC	Watts	LF709	4	VU	27-Jul-2012	27-Jul-2015	Y	9	(ll),mm,oo,pp,zzz,cccc,dddd,eeee,ffff,gggg,nnnnn	N	
DC	Watts	LF709	6	H	27-Jul-2012	27-Jul-2015	Y	9	(ll),mm,oo,pp,zzz,cccc,dddd,eeee,ffff,gggg,nnnnn	N	
DC	Watts	LF709	6	VU	27-Jul-2012	27-Jul-2015	Y	9	(ll),mm,oo,pp,zzz,cccc,dddd,eeee,ffff,gggg,nnnnn	N	
DC	Watts	LF709	8	H	1-Jul-2010	1-Jul-2013	Y	9	(ll),mm,oo,pp,zzz,cccc,dddd,eeee,ffff,gggg,nnnnn	N	
DC	Watts	LF709	8	VU	1-Jul-2010	1-Jul-2013	Y	9	(ll),mm,oo,pp,zzz,cccc,dddd,eeee,ffff,gggg,nnnnn	N	
DC	Watts	LF709	10	H	1-Jul-2010	1-Jul-2013	Y	9	(ll),mm,oo,pp,zzz,cccc,dddd,eeee,ffff,gggg,nnnnn	N	
DC	Watts	LF709	10	VU	1-Jul-2010	1-Jul-2013	Y	9	(ll),mm,oo,pp,zzz,cccc,dddd,eeee,ffff,gggg,nnnnn	N	
DC	Watts	LF719AQT	1	VUVD	22-Aug-2005	22-Aug-2014	N	9	(vv),xx,ooo,pppp,rrrrr	N	
DC	Watts	LF719AQT	1	VUVD	22-Aug-2005	22-Aug-2014	Y	9	hhhh,rrrrr	N	
DC	Watts	LF719AQT	1 1/4	VUVD	22-Aug-2005	22-Aug-2014	N	9	(vv),xx,ooo,pppp,rrrrr	N	
DC	Watts	LF719AQT	1 1/4	VUVD	22-Aug-2005	22-Aug-2014	Y	9	hhhh,rrrrr	N	
DC	Watts	LF719AQT	1 1/2	VUVD	22-Aug-2005	22-Aug-2014	N	9	(vv),xx,ooo,pppp,rrrrr	N	
DC	Watts	LF719AQT	1 1/2	VUVD	22-Aug-2005	22-Aug-2014	Y	9	hhhh,rrrrr	N	
DC	Watts	LF719AQT	2	VUVD	22-Aug-2005	22-Aug-2014	N	9	(vv),xx,ooo,pppp,rrrrr	N	
DC	Watts	LF719AQT	2	VUVD	22-Aug-2005	22-Aug-2014	Y	9	hhhh,rrrrr	N	
DC	Watts	LF719QT	1/2	H	3-Jul-2013		Y	9	(hhhh)	N	
DC	Watts	LF719QT	1/2	VD	3-Jul-2013		Y	9	(hhhh)	N	
DC	Watts	LF719QT	1/2	VU	3-Jul-2013		Y	9	(hhhh)	N	
DC	Watts	LF719QT	3/4	H	3-Jul-2013		Y	9	(hhhh)	N	
DC	Watts	LF719QT	3/4	VD	3-Jul-2013		Y	9	(hhhh)	N	
DC	Watts	LF719QT	3/4	VU	3-Jul-2013		Y	9	(hhhh)	N	
DC	Watts	LF719QT	1	H	22-Aug-2005	22-Aug-2014	N	9	(vv),xx,ooo,pppp,rrrrr	N	
DC	Watts	LF719QT	1	H	22-Aug-2005	22-Aug-2014	Y	9	hhhh,rrrrr	N	
DC	Watts	LF719QT	1	VD	22-Aug-2005	22-Aug-2014	N	9	(vv),xx,ooo,pppp,rrrrr	N	
DC	Watts	LF719QT	1	VD	22-Aug-2005	22-Aug-2014	Y	9	hhhh,rrrrr	N	
DC	Watts	LF719QT	1	VU	22-Aug-2005	22-Aug-2014	N	9	(vv),xx,ooo,pppp,rrrrr	N	
DC	Watts	LF719QT	1	VU	22-Aug-2005	22-Aug-2014	Y	9	hhhh,rrrrr	N	
DC	Watts	LF719QT	1 1/4	H	22-Aug-2005	22-Aug-2014	N	9	(vv),xx,ooo,pppp,rrrrr	N	
DC	Watts	LF719QT	1 1/4	H	22-Aug-2005	22-Aug-2014	Y	9	hhhh,rrrrr	N	
DC	Watts	LF719QT	1 1/4	VD	22-Aug-2005	22-Aug-2014	N	9	(vv),xx,ooo,pppp,rrrrr	N	
DC	Watts	LF719QT	1 1/4	VD	22-Aug-2005	22-Aug-2014	Y	9	hhhh,rrrrr	N	
DC	Watts	LF719QT	1 1/4	VU	22-Aug-2005	22-Aug-2014	N	9	(vv),xx,ooo,pppp,rrrrr	N	
DC	Watts	LF719QT	1 1/4	VU	22-Aug-2005	22-Aug-2014	Y	9	hhhh,rrrrr	N	
DC	Watts	LF719QT	1 1/2	H	22-Aug-2005	22-Aug-2014	N	9	(vv),xx,ooo,pppp,rrrrr	N	
DC	Watts	LF719QT	1 1/2	H	22-Aug-2005	22-Aug-2014	Y	9	hhhh,rrrrr	N	
DC	Watts	LF719QT	1 1/2	VD	22-Aug-2005	22-Aug-2014	N	9	(vv),xx,ooo,pppp,rrrrr	N	
DC	Watts	LF719QT	1 1/2	VD	22-Aug-2005	22-Aug-2014	Y	9	hhhh,rrrrr	N	
DC	Watts	LF719QT	1 1/2	VU	22-Aug-2005	22-Aug-2014	N	9	(vv),xx,ooo,pppp,rrrrr	N	
DC	Watts	LF719QT	1 1/2	VU	22-Aug-2005	22-Aug-2014	Y	9	hhhh,rrrrr	N	
DC	Watts	LF719QT	2	H	22-Aug-2005	22-Aug-2014	N	9	(vv),xx,ooo,pppp,rrrrr	N	
DC	Watts	LF719QT	2	H	22-Aug-2005	22-Aug-2014	Y	9	hhhh,rrrrr	N	
DC	Watts	LF719QT	2	VD	22-Aug-2005	22-Aug-2014	N	9	(vv),xx,ooo,pppp,rrrrr	N	
DC	Watts	LF719QT	2	VD	22-Aug-2005	22-Aug-2014	Y	9	hhhh,rrrrr	N	
DC	Watts	LF719QT	2	VU	22-Aug-2005	22-Aug-2014	N	9	(vv),xx,ooo,pppp,rrrrr	N	
DC	Watts	LF719QT	2	VU	22-Aug-2005	22-Aug-2014	Y	9	hhhh,rrrrr	N	
DC	Watts	LF719QTR10	1/2	H	22-Aug-2005	22-Aug-2014	N	9	(vv),xx,ooo,hhhh,pppp,rrrrr	N	
DC	Watts	LF719QTR10	1/2	VD	22-Aug-2005	22-Aug-2014	N	9	(vv),xx,ooo,hhhh,pppp,rrrrr	N	
DC	Watts	LF719QTR10	1/2	VU	22-Aug-2005	22-Aug-2014	N	9	(vv),xx,ooo,hhhh,pppp,rrrrr	N	
DC	Watts	LF719QTR10	3/4	H	22-Aug-2005	22-Aug-2014	N	9	(vv),xx,ooo,hhhh,pppp,rrrrr	N	
DC	Watts	LF719QTR10	3/4	VD	22-Aug-2005	22-Aug-2014	N	9	(vv),xx,ooo,hhhh,pppp,rrrrr	N	
DC	Watts	LF719QTR10	3/4	VU	22-Aug-2005	22-Aug-2014	N	9	(vv),xx,ooo,hhhh,pppp,rrrrr	N	
DC	Watts	LFU719QT	1	H	22-Aug-2005	22-Aug-2014	N	9	(vv),xx,ooo,pppp	N	
DC	Watts	LFU719QT	1	H	22-Aug-2005	22-Aug-2014	Y	9	hhhh	N	
DC	Watts	LFU719QT	1	VD	22-Aug-2005	22-Aug-2014	N	9	(vv),xx,ooo,pppp	N	
DC	Watts	LFU719QT	1	VD	22-Aug-2005	22-Aug-2014	Y	9	hhhh	N	
DC	Watts	LFU719QT	1	VU	22-Aug-2005	22-Aug-2014	N	9	(vv),xx,ooo,pppp	N	
DC	Watts	LFU719QT	1	VU	22-Aug-2005	22-Aug-2014	Y	9	hhhh	N	
DC	Watts	LFU719QT	1 1/4	H	22-Aug-2005	22-Aug-2014	N	9	(vv),xx,ooo,pppp	N	
DC	Watts	LFU719QT	1 1/4	H	22-Aug-2005	22-Aug-2014	Y	9	hhhh	N	
DC	Watts	LFU719QT	1 1/4	VD	22-Aug-2005	22-Aug-2014	N	9	(vv),xx,ooo,pppp	N	
DC	Watts	LFU719QT	1 1/4	VD	22-Aug-2005	22-Aug-2014	Y	9	hhhh	N	
DC	Watts	LFU719QT	1 1/4	VU	22-Aug-2005	22-Aug-2014	N	9	(vv),xx,ooo,pppp	N	
DC	Watts	LFU719QT	1 1/4	VU	22-Aug-2005	22-Aug-2014	Y	9	hhhh	N	
DC	Watts	LFU719QT	1 1/2	H	22-Aug-2005	22-Aug-2014	N	9	(vv),xx,ooo,pppp	N	
DC	Watts	LFU719QT	1 1/2	H	22-Aug-2005	22-Aug-2014	Y	9	hhhh	N	
DC	Watts	LFU719QT	1 1/2	VD	22-Aug-2005	22-Aug-2014	N	9	(vv),xx,ooo,pppp	N	
DC	Watts	LFU719QT	1 1/2	VD	22-Aug-2005	22-Aug-2014	Y	9	hhhh	N	
DC	Watts	LFU719QT	1 1/2	VU	22-Aug-2005	22-Aug-2014	N	9	(vv),xx,ooo,pppp	N	
DC	Watts	LFU719QT	1 1/2	VU	22-Aug-2005	22-Aug-2014	Y	9	hhhh	N	
DC	Watts	LFU719QT	2	H	22-Aug-2005	22-Aug-2014	N	9	(vv),xx,ooo,pppp	N	
DC	Watts	LFU719QT	2	H	22-Aug-2005	22-Aug-2014	Y	9	hhhh	N	
DC	Watts	LFU719QT	2	VD	22-Aug-2005	22-Aug-2014	N	9	(vv),xx,ooo,pppp	N	
DC	Watts	LFU719QT	2	VD	22-Aug-2005	22-Aug-2014	Y	9	hhhh	N	
DC	Watts	LFU719QT	2	VU	22-Aug-2005	22-Aug-2014	N	9	(vv),xx,ooo,pppp	N	
DC	Watts	LFU719QT	2	VU	22-Aug-2005	22-Aug-2014	Y	9	hhhh	N	
DC	Watts	SS007M1QT	1	H	18-May-1998	18-May-2013	Y	9	(hhh)	N	
DC	Watts	SS007M1QT	1	VU	18-May-1998	18-May-2013	Y	9	(hhh)	N	
DC	Watts	SS007M3QT	1/2	H	11-Sep-2000	11-Sep-2015	Y	9	(hhh)	N	
DC	Watts	SS007M3QT	1/2	VU	11-Sep-2000	11-Sep-2015	Y	9	(hhh)	N	

Type	Manufacturer	Model	Size	Orientation(s)	Approved	Renewed	≤0.25% Pb	Manual	Shutoffs	Spare Parts	Bypass
DC	Watts	SS007M3QT	3/4	H	7-Sep-2000	7-Sep-2015	Y	9	(hhh)	N	
DC	Watts	SS007M3QT	3/4	VU	7-Sep-2000	7-Sep-2015	Y	9	(hhh)	N	
DC	Watts	U007M1APCQT	3/4	VDVD	10-Dec-1994	10-Dec-2015	N	8	(vv),xx,ooo,hhhh,pppp	N	
DC	Watts	U007M1APCQT	3/4	VDVU	10-Dec-1994	10-Dec-2015	N	8	(vv),xx,ooo,hhhh,pppp	N	
DC	Watts	U007M1APCQT	3/4	VUVD	10-Dec-1994	10-Dec-2015	N	8	(vv),xx,ooo,hhhh,pppp	N	
DC	Watts	U007M1APCQT	3/4	VUVU	10-Dec-1994	10-Dec-2015	N	8	(vv),xx,ooo,hhhh,pppp	N	
DC	Watts	U007M1APCQT	2	VDVD	27-Sep-1994	27-Sep-2015	N	8	(vv),xx,ooo,hhhh,pppp	N	
DC	Watts	U007M1APCQT	2	VDVU	27-Sep-1994	27-Sep-2015	N	8	(vv),xx,ooo,hhhh,pppp	N	
DC	Watts	U007M1APCQT	2	VUVD	27-Sep-1994	27-Sep-2015	N	8	(vv),xx,ooo,hhhh,pppp	N	
DC	Watts	U007M1APCQT	2	VUVU	27-Sep-1994	27-Sep-2015	N	8	(vv),xx,ooo,hhhh,pppp	N	
DC	Watts	U007M1AQT	3/4	VDVD	24-Feb-1994	24-Feb-2015	N	8	(vv),xx,ooo,hhhh,pppp	N	
DC	Watts	U007M1AQT	3/4	VDVU	24-Feb-1994	24-Feb-2015	N	8	(vv),xx,ooo,hhhh,pppp	N	
DC	Watts	U007M1AQT	3/4	VUVD	24-Feb-1994	24-Feb-2015	N	8	(vv),xx,ooo,hhhh,pppp	N	
DC	Watts	U007M1AQT	3/4	VUVU	24-Feb-1994	24-Feb-2015	N	8	(vv),xx,ooo,hhhh,pppp	N	
DC	Watts	U007M1AQT	2	VDVD	24-Feb-1994	24-Feb-2015	N	8	(vv),xx,ooo,hhhh,pppp	N	
DC	Watts	U007M1AQT	2	VDVU	24-Feb-1994	24-Feb-2015	N	8	(vv),xx,ooo,hhhh,pppp	N	
DC	Watts	U007M1AQT	2	VUVD	24-Feb-1994	24-Feb-2015	N	8	(vv),xx,ooo,hhhh,pppp	N	
DC	Watts	U007M1AQT	2	VUVU	24-Feb-1994	24-Feb-2015	N	8	(vv),xx,ooo,hhhh,pppp	N	
DC	Watts	U007M1PCQT	3/4	H	10-Dec-1993	10-Dec-2014	N	8	(vv),xx,ooo,hhhh,pppp	N	
DC	Watts	U007M1PCQT	1	H	10-Dec-1993	10-Dec-2014	N	8	(vv),xx,ooo,hhhh,pppp	N	
DC	Watts	U007M1PCQT	1 1/2	H	27-Sep-1994	27-Sep-2015	N	8	(vv),xx,ooo,hhhh,pppp	N	
DC	Watts	U007M1PCQT	2	H	27-Sep-1994	27-Sep-2015	N	8	(vv),xx,ooo,hhhh,pppp	N	
DC	Watts	U007M1QT	3/4	H	30-Aug-1993	28-Aug-2014	N	8	(vv),xx,ooo,hhhh,pppp	N	
DC	Watts	U007M1QT	1	H	30-Aug-1993	30-Aug-2014	N	8	(vv),xx,ooo,hhhh,pppp	N	
DC	Watts	U007M1QT	1 1/2	H	20-Oct-1993	20-Oct-2014	N	8	vv,xx,ooo,hhhh,pppp	Y	
DC	Watts	U007M1QT	2	H	20-Oct-1993	20-Oct-2014	N	8	(vv),xx,ooo,hhhh,pppp	N	
DC	Watts	U007M2AQT	1 1/2	VDVD	6-Sep-1994	6-Sep-2015	N	8	(vv),xx,ooo,hhhh,pppp	N	
DC	Watts	U007M2AQT	1 1/2	VDVU	6-Sep-1994	6-Sep-2015	N	8	(vv),xx,ooo,hhhh,pppp	N	
DC	Watts	U007M2AQT	1 1/2	VUVD	6-Sep-1994	6-Sep-2015	N	8	(vv),xx,ooo,hhhh,pppp	N	
DC	Watts	U007M2AQT	1 1/2	VUVU	6-Sep-1994	6-Sep-2015	N	8	(vv),xx,ooo,hhhh,pppp	N	
DC	Watts	U007M2QT	1 1/4	H	1-Oct-1996	1-Oct-2014	N	8	(vv),xx,ooo,hhhh,pppp	N	
DC	Watts	U007M2QT	1 1/2	H	6-Sep-1994	6-Sep-2015	N	8	(vv),xx,ooo,hhhh,pppp	N	
DC	Watts	U007PCQT	3/4	H	10-Dec-1993	10-Dec-2014	N	8	vv,xx,ooo,hhhh,pppp	Y	
DC	Watts	U007PCQT	1	H	10-Dec-1993	10-Dec-2014	N	8	vv,xx,ooo,hhhh,pppp	Y	
DC	Watts	U007PCQT	1 1/2	H	27-Sep-1994	27-Sep-2015	N	8	vv,xx,ooo,hhhh,pppp	Y	
DC	Watts	U007PCQT	2	H	27-Sep-1994	27-Sep-2015	N	8	vv,xx,ooo,hhhh,pppp	Y	
DC	Watts	U007QT	1/2	H	8-Mar-1999	8-Mar-2014	N	9	(vv),xx,ooo,hhhh,pppp	N	
DC	Watts	U007QT	1/2	VU	8-Mar-1999	8-Mar-2014	N	9	(vv),xx,ooo,hhhh,pppp	N	
DC	Watts	U007QT	3/4	H	11-Jan-1988	11-Jan-2015	N	7	vv,xx,ooo,hhhh,pppp	Y	
DC	Watts	U007QT	1	H	11-Jan-1988	11-Jan-2015	N	7	vv,xx,ooo,hhhh,pppp	Y	
DC	Watts	U007QT	1 1/2	H	21-Jul-1988	21-Jul-2015	N	7	vv,xx,ooo,hhhh,pppp	Y	
DC	Watts	U007QT	2	H	21-Jul-1988	21-Jul-2015	N	7	vv,xx,ooo,hhhh,pppp	Y	
DC	Watts	U007SSPCQT	3/4	H	10-Dec-1993	10-Dec-2014	N	8	vv,xx,pppp	Y	
DC	Watts	U007SSPCQT	1	H	10-Dec-1993	10-Dec-2014	N	8	vv,xx,pppp	Y	
DC	Watts	U007SSPCQT	1 1/2	H	27-Sep-1994	27-Sep-2015	N	8	vv,xx,pppp	Y	
DC	Watts	U007SSPCQT	2	H	27-Sep-1994	27-Sep-2015	N	8	vv,xx,pppp	Y	
DC	Watts	U007SSQT	3/4	H	11-Jan-1988	11-Jan-2015	N	7	vv,xx,pppp	Y	
DC	Watts	U007SSQT	1	H	11-Jan-1988	11-Jan-2015	N	7	vv,xx,pppp	Y	
DC	Watts	U007SSQT	1 1/2	H	21-Jul-1988	21-Jul-2015	N	7	vv,xx,pppp	Y	
DC	Watts	U007SSQT	2	H	21-Jul-1988	21-Jul-2015	N	7	vv,xx,pppp	Y	
DC	Watts	U719QT	1/2								
DC	Watts	U719QT	1/2								
DC	Watts	U719QT	1/2								
DC	Watts	U719QT	3/4								
DC	Watts	U719QT	3/4								
DC	Watts	U719QT	3/4								
DC	Watts	U719QT	1	H	4-Oct-2005	4-Oct-2014	N	9	(vv),xx,ooo,hhhh,pppp	N	
DC	Watts	U719QT	1	VD	4-Oct-2005	4-Oct-2014	N	9	(vv),xx,ooo,hhhh,pppp	N	
DC	Watts	U719QT	1	VU	4-Oct-2005	4-Oct-2014	N	9	(vv),xx,ooo,hhhh,pppp	N	
DC	Watts	U719QT	1 1/4	H	4-Oct-2005	4-Oct-2014	N	9	(vv),xx,ooo,hhhh,pppp	N	
DC	Watts	U719QT	1 1/4	VD	4-Oct-2005	4-Oct-2014	N	9	(vv),xx,ooo,hhhh,pppp	N	
DC	Watts	U719QT	1 1/4	VU	4-Oct-2005	4-Oct-2014	N	9	(vv),xx,ooo,hhhh,pppp	N	
DC	Watts	U719QT	1 1/2	H	4-Oct-2005	4-Oct-2014	N	9	(vv),xx,ooo,hhhh,pppp	N	
DC	Watts	U719QT	1 1/2	VD	4-Oct-2005	4-Oct-2014	N	9	(vv),xx,ooo,hhhh,pppp	N	
DC	Watts	U719QT	1 1/2	VU	4-Oct-2005	4-Oct-2014	N	9	(vv),xx,ooo,hhhh,pppp	N	
DC	Watts	U719QT	2	H	4-Oct-2005	4-Oct-2014	N	9	(vv),xx,ooo,hhhh,pppp	N	
DC	Watts	U719QT	2	VD	4-Oct-2005	4-Oct-2014	N	9	(vv),xx,ooo,hhhh,pppp	N	
DC	Watts	U719QT	2	VU	4-Oct-2005	4-Oct-2014	N	9	(vv),xx,ooo,hhhh,pppp	N	
DC	Watts	U719QTR10	1/2	H	4-Oct-2005	4-Oct-2014	N	9	(vv),xx,ooo,hhhh,pppp	N	
DC	Watts	U719QTR10	1/2	VD	4-Oct-2005	4-Oct-2014	N	9	(vv),xx,ooo,hhhh,pppp	N	
DC	Watts	U719QTR10	1/2	VU	4-Oct-2005	4-Oct-2014	N	9	(vv),xx,ooo,hhhh,pppp	N	
DC	Watts	U719QTR10	3/4	H	4-Oct-2005	4-Oct-2014	N	9	(vv),xx,ooo,hhhh,pppp	N	
DC	Watts	U719QTR10	3/4	VD	4-Oct-2005	4-Oct-2014	N	9	(vv),xx,ooo,hhhh,pppp	N	
DC	Watts	U719QTR10	3/4	VU	4-Oct-2005	4-Oct-2014	N	9	(vv),xx,ooo,hhhh,pppp	N	
DC	Wilkins	350	3/4	H	6-Jul-2005	6-Jul-2014	N	9	(ii),ooo	N	
DC	Wilkins	350	3/4	VU	6-Jul-2005	6-Jul-2014	N	9	(ii),ooo	N	
DC	Wilkins	350	1	H	21-Apr-2006	21-Apr-2015	N	9	(ii),ooo	N	
DC	Wilkins	350	1	VU	21-Apr-2006	21-Apr-2015	N	9	(ii),ooo	N	
DC	Wilkins	350	1 1/4	H	8-Jan-2009	8-Jan-2015	N	9	(int)	N	
DC	Wilkins	350	1 1/4	VU	8-Jan-2009	8-Jan-2015	N	9	(int)	N	
DC	Wilkins	350	1 1/2	H	8-Jan-2009	8-Jan-2015	N	9	(int)	N	
DC	Wilkins	350	1 1/2	VU	8-Jan-2009	8-Jan-2015	N	9	(int)	N	
DC	Wilkins	350	2	H	8-Jan-2009	8-Jan-2015	N	9	(int)	N	
DC	Wilkins	350	2	VU	8-Jan-2009	8-Jan-2015	N	9	(int)	N	
DC	Wilkins	350	2 1/2	H	5-Sep-2001	5-Sep-2013	N	9	(gg),ee,ff,hh,ll,mm,tt,uu,yy,zz,ppp,qqq,zzz,dddd,ssss,tttt,vvvv,wwww,yyyy,zzzz,kkkkk	N	
DC	Wilkins	350	2 1/2	H	9-Sep-2010	9-Sep-2013	Y	9	(gg),hh,ppp,qqq,ssss,tttt,vvvv,wwww,yyyy,zzzz,kkkkk	N	
DC	Wilkins	350	2 1/2	VU	9-Sep-2010	9-Sep-2013	Y	9	(gg),ee,ff,hh,ll,mm,tt,uu,yy,zz,ppp,qqq,zzz,dddd,ssss,tttt,vvvv,wwww,yyyy,zzzz,kkkkk	N	
DC	Wilkins	350	2 1/2	VU	3-Apr-2002	3-Apr-2014	N	9	(gg),hh,ppp,qqq,ssss,tttt,vvvv,wwww,yyyy,zzzz,kkkkk	N	
DC	Wilkins	350	3	H	5-Sep-2001	5-Sep-2013	N	9	(gg),ee,ff,hh,ll,mm,tt,uu,yy,zz,ppp,qqq,zzz,dddd,ssss,tttt,vvvv,wwww,yyyy,zzzz,kkkkk	N	
DC	Wilkins	350	3	H	9-Sep-2010	9-Sep-2013	Y	9	(gg),hh,ppp,qqq,ssss,tttt,vvvv,wwww,yyyy,zzzz,kkkkk	N	
DC	Wilkins	350	3	VU	9-Sep-2010	9-Sep-2013	Y	9	(gg),hh,ppp,qqq,ssss,tttt,vvvv,wwww,yyyy,zzzz,kkkkk	N	
DC	Wilkins	350	3	VU	3-Apr-2002	3-Apr-2014	N	9	(gg),ee,ff,hh,ll,mm,tt,uu,yy,zz,ppp,qqq,zzz,dddd,ssss,tttt,vvvv,wwww,yyyy,zzzz,kkkkk	N	
DC	Wilkins	350	4	H	9-Sep-2010	9-Sep-2013	Y	9	(gg),hh,ppp,qqq,vvv,www,ssss,tttt,vvvv,wwww,yyyy,zzzz,kkkkk	N	
DC	Wilkins	350	4	H	15-Sep-1999	15-Sep-2014	N	9	(gg),ee,ff,hh,ll,mm,tt,uu,yy,zz,ppp,qqq,vvv,www,zzz,dddd,eeee,ssss,tttt,vvvv,wwww,yyyy,zzzz,kkkkk	N	
DC	Wilkins	350	4	VU	9-Sep-2010	9-Sep-2013	Y	9	(gg),hh,ppp,qqq,vvv,www,ssss,tttt,vvvv,wwww,yyyy,zzzz,kkkkk	N	
DC	Wilkins	350	4	VU	7-Sep-2000	7-Sep-2015	N	9	(gg),ee,ff,hh,ll,mm,tt,uu,yy,zz,ppp,qqq,vvv,www,zzz,dddd,eeee,ssss,tttt,vvvv,wwww,yyyy,zzzz,kkkkk	N	
DC	Wilkins	350	6	H	9-Sep-2010	9-Sep-2013	Y	9	(gg),hh,ppp,qqq,vvv,www,ssss,tttt,vvvv,wwww,yyyy,zzzz,kkkkk	N	
DC	Wilkins	350	6	H	18-Oct-1999	18-Oct-2014	N	9	(gg),ee,ff,hh,ll,mm,tt,uu,yy,zz,ppp,qqq,vvv,www,zzz,dddd,eeee,ssss,tttt,vvvv,wwww,yyyy,zzzz,kkkkk	N	
DC	Wilkins	350	6	VU	9-Sep-2010	9-Sep-2013	Y	9	(gg),hh,ppp,qqq,vvv,www,ssss,tttt,vvvv,wwww,yyyy,zzzz,kkkkk	N	
DC	Wilkins	350	6	VU	17-Dec-1999	17-Dec-2014	N	9	(gg),ee,ff,hh,ll,mm,tt,uu,yy,zz,ppp,qqq,vvv,www,zzz,dddd,eeee,ssss,tttt,vvvv,wwww,yyyy,zzzz,kkkkk	N	
DC	Wilkins	350	8	H	9-Sep-2010	9-Sep-2013	Y	9	(gg),hh,ppp,qqq,vvv,www,ssss,tttt,vvvv,wwww,yyyy,zzzz,kkkkk	N	
DC	Wilkins	350	8	H	8-Mar-2002	8-Mar-2014	N	9	(gg),ee,ff,hh,ll,mm,tt,uu,yy,zz,ppp,qqq,vvv,www,zzz,dddd,eeee,ssss,tttt,vvvv,wwww,yyyy,zzzz,kkkkk	N	
DC	Wilkins	350	8	VU	9-Sep-2010	9-Sep-2013	Y	9	(gg),hh,ppp,qqq,vvv,www,ssss,tttt,vvvv,wwww,yyyy,zzzz,kkkkk	N	
DC	Wilkins	350	8	VU	16-Jan-2003	16-Jan-2015	N	9	(gg),ee,ff,hh,ll,mm,tt,uu,yy,zz,ppp,qqq,vvv,www,zzz,dddd,eeee,ssss,tttt,vvvv,wwww,yyyy,zzzz,kkkkk	N	
DC	Wilkins	350	10	H	9-Sep-2010	9-Sep-2013	Y	9	(gg),hh,ppp,qqq,vvv,www,ssss,tttt,vvvv,wwww,yyyy,zzzz,kkkkk	N	
DC	Wilkins	350	10	H	28-Aug-2002	28-Aug-2014	N	9	(gg),ee,ff,hh,ll,mm,tt,uu,yy,zz,ppp,qqq,vvv,www,zzz,dddd,eeee,ssss,tttt,vvvv,wwww,yyyy,zzzz,kkkkk	N	
DC	Wilkins	350	10	VU	9-Sep-2010	9-Sep-2013	Y	9	(gg),hh,ppp,qqq,vvv,www,ssss,tttt,vvvv,wwww,yyyy,zzzz,kkkkk	N	
DC	Wilkins	350	10	VU	14-Mar-2003	14-Mar-2015	N	9	(gg),ee,ff,hh,ll,mm,tt,uu,yy,zz,ppp,qqq,vvv,www,zzz,dddd,eeee,ssss,tttt,vvvv,wwww,yyyy,zzzz,kkkkk	N	
DC	Wilkins	350	12	H	9-Sep-2010	9-Sep-2013	Y	9	(hh),ssss,tttt,vvvv,wwww,yyyy,zzzz,kkkkk	N	
DC	Wilkins	350	12	H	10-Feb-2009	10-Feb-2015	N	9	(hh),ssss,tttt,vvvv,wwww,yyyy,zzzz,kkkkk	N	
DC	Wilkins	450	2 1/2	VUVD	9-Sep-2010	9-Sep-2013	Y	9	(gg),ee,ff,hh,ll,mm,tt,uu,yy,zz,ppp,qqq,zzz,dddd,ssss,uuuu,vvvv,xxxx,yyyy,aaaaa,kkkkk	N	
DC	Wilkins	450	2 1/2	VUVD	24-Jan-2002	24-Jan-2014	N	9	(gg),ee,ff,hh,ll,mm,tt,uu,yy,zz,ppp,qqq,zzz,dddd,ssss,uuuu,vvvv,xxxx,yyyy,aaaaa	N	
DC	Wilkins	450	3	VUVD	9-Sep-2010	9-Sep-2013	Y	9	(gg),hh,ppp,qqq,ssss,uuuu,vvvv,xxxx,yyyy,aaaaa,kkkkk,llllll	N	
DC	Wilkins	450	3	VUVD	24-Jan-2002	24-Jan-2014	N	9	(gg),ee,ff,hh,ll,mm,tt,uu,yy,zz,ppp,qqq,zzz,dddd,ssss,uuuu,vvvv,xxxx,yyyy,aaaaa,kkkkk,llllll	N	
DC	Wilkins	450	4	VUVD	9-Sep-2010	9-Sep-2013	Y	9	(ppp),qqq,sss,ttt,www,yyy,ssss,uuuu,vvvv,xxxx,yyyy,aaaaa,kkkkk,llllll	N	
DC	Wilkins	450	4	VUVD	12-Apr-2000	12-Apr-2015	N	9	(ppp),qqq,sss,ttt,www,yyy,zzz,dddd,eeee,ssss,uuuu,vvvv,xxxx,yyyy,aaaaa,kkkkk,llllll	N	
DC	Wilkins	450	6	VUVD	9-Sep-2010	9-Sep-2013	Y	9	(ppp),qqq,sss,ttt,www,yyy,ssss,uuuu,vvvv,xxxx,yyyy,aaaaa,kkkkk,llllll	N	
DC	Wilkins	450	6	VUVD	24-May-2000	24-May-2015	N	9	(ppp),qqq,sss,ttt,www,yyy,zzz,dddd,eeee,ssss,uuuu,vvvv,xxxx,yyyy,aaaaa,kkkkk,llllll	N	
DC	Wilkins	450	8	VUVD	9-Sep-2010	9-Sep-2013	Y	9	(ppp),qqq,sss,ttt,www,yyy,ssss,uuuu,vvvv,xxxx,yyyy,aaaaa,kkkkk,llllll	N	
DC	Wilkins	450	8	VUVD	14-Apr-2003	14-Apr-2015	N	9	(ppp),qqq,sss,ttt,www,yyy,zzz,dddd,eeee,ssss,uuuu,vvvv,xxxx,yyyy,aaaaa,kkkkk,llllll	N	
DC	Wilkins	450	10	VUVD	9-Sep-2010	9-Sep-2013	Y	9	(ppp),qqq,sss,ttt,www,yyy,ssss,uuuu,vvvv,xxxx,yyyy,aaaaa,kkkkk,llllll	N	
DC	Wilkins	450	10	VUVD	11-Sep-2003	11-Sep-2015	N	9	(ppp),qqq,sss,ttt,www,yyy,zzz,dddd,eeee,ssss,uuuu,vvvv,xxxx,yyyy,aaaaa,kkkkk,llllll	N	
DC	Wilkins	950	4	VU	29-Aug-1995	29-Aug-2013	N	8	(ppp),qqq,sss,ttt,www,yyy,zzz,dddd,eeee,ssss,uuuu,vvvv,xxxx,yyyy,aaaaa	Y	
DC	Wilkins	950	6	VU	29-Aug-1995	29-Aug-2013	N	8	(gg),hh,ppp,qqq,ssss,uuuu,vvvv,xxxx,yyyy,aaaaa	Y	
DC	Wilkins	950	8	VU	29-Aug-1995	29-Aug-2013	N	8	(ppp),qqq,sss,ttt,www,yyy,ssss,uuuu,vvvv,xxxx,yyyy,aaaaa	N	

Type	Manufacturer	Model	Size	Orientation(s)	Approved	Renewed	≤0.25% Pb	Manual	Shutoffs	Spare Parts	Bypass
DC	Wilkins	950	10	H	12-Apr-1994	12-Apr-2015	N	8	(ppp),qqq,sss,ttt,www,yyy,ssss,uuuu,vvvv,xxxx,yyyy,aaaaa	N	
DC	Wilkins	350A	2 1/2	H	9-Sep-2010	9-Sep-2013	Y	9	(ppp),qqq,sss,ttt,yyy,ssss,uuuu,vvvv,xxxx,yyyy,aaaaa,kkkkk	N	
DC	Wilkins	350A	2 1/2	H	22-Jun-2005	22-Jun-2014	N	9	(ppp),sss,ttt,qqq,yyy,zzz,dddd,ssss,uuuu,vvvv,xxxx,yyyy,aaaaa,kkkkk,lllll	N	
DC	Wilkins	350A	2 1/2	VU	9-Sep-2010	9-Sep-2013	Y	9	(ppp),qqq,sss,ttt,yyy,ssss,uuuu,vvvv,xxxx,yyyy,aaaaa,kkkkk	N	
DC	Wilkins	350A	2 1/2	VU	22-Jun-2005	22-Jun-2014	N	9	(ppp),sss,ttt,qqq,yyy,zzz,dddd,ssss,uuuu,vvvv,xxxx,yyyy,aaaaa,kkkkk,lllll	N	
DC	Wilkins	350A	3	H	9-Sep-2010	9-Sep-2013	Y	9	(ppp),qqq,sss,ttt,yyy,ssss,uuuu,vvvv,xxxx,yyyy,aaaaa,kkkkk,lllll	N	
DC	Wilkins	350A	3	H	22-Jun-2005	22-Jun-2014	N	9	(ppp),sss,ttt,qqq,yyy,zzz,dddd,ssss,uuuu,vvvv,xxxx,yyyy,aaaaa,kkkkk,lllll	N	
DC	Wilkins	350A	3	VU	9-Sep-2010	9-Sep-2013	Y	9	(ppp),qqq,sss,ttt,yyy,ssss,uuuu,vvvv,xxxx,yyyy,aaaaa,kkkkk,lllll	N	
DC	Wilkins	350A	3	VU	22-Jun-2005	22-Jun-2014	N	9	(ppp),sss,ttt,qqq,yyy,zzz,dddd,ssss,uuuu,vvvv,xxxx,yyyy,aaaaa,kkkkk,lllll	N	
DC	Wilkins	350A	4	H	9-Sep-2010	9-Sep-2013	Y	9	(ppp),qqq,sss,ttt,yyy,ssss,uuuu,vvvv,xxxx,yyyy,aaaaa,kkkkk,lllll	N	
DC	Wilkins	350A	4	H	16-Mar-2004	16-Mar-2016	N	9	(ppp),qqq,sss,ttt,www,yyy,zzz,dddd,eeee,ssss,uuuu,vvvv,xxxx,yyyy,aaaaa,kkkkk,lllll	N	
DC	Wilkins	350A	4	VU	9-Sep-2010	9-Sep-2013	Y	9	(ppp),qqq,sss,ttt,yyy,ssss,uuuu,vvvv,xxxx,yyyy,aaaaa,kkkkk,lllll	N	
DC	Wilkins	350A	4	VU	16-Mar-2004	16-Mar-2016	N	9	(ppp),qqq,sss,ttt,www,yyy,zzz,dddd,eeee,ssss,uuuu,vvvv,xxxx,yyyy,aaaaa,kkkkk,lllll	N	
DC	Wilkins	350A	6	H	9-Sep-2010	9-Sep-2013	Y	9	(ppp),qqq,sss,ttt,yyy,ssss,uuuu,vvvv,xxxx,yyyy,aaaaa,kkkkk,lllll	N	
DC	Wilkins	350A	6	H	25-Nov-2003	25-Nov-2015	N	9	(ppp),qqq,sss,ttt,www,yyy,zzz,dddd,eeee,ssss,uuuu,vvvv,xxxx,yyyy,aaaaa,kkkkk,lllll	N	
DC	Wilkins	350A	6	VU	9-Sep-2010	9-Sep-2013	Y	9	(ppp),qqq,sss,ttt,yyy,ssss,uuuu,vvvv,xxxx,yyyy,aaaaa,kkkkk,lllll	N	
DC	Wilkins	350A	6	VU	25-Nov-2003	25-Nov-2015	N	9	(ppp),qqq,sss,ttt,www,yyy,zzz,dddd,eeee,ssss,uuuu,vvvv,xxxx,yyyy,aaaaa,kkkkk,lllll	N	
DC	Wilkins	350A	8	H	9-Sep-2010	9-Sep-2013	Y	9	(ppp),qqq,sss,ttt,www,yyy,ssss,uuuu,vvvv,xxxx,yyyy,aaaaa,kkkkk,lllll	N	
DC	Wilkins	350A	8	H	12-Feb-2004	12-Feb-2016	N	9	(ppp),qqq,sss,ttt,www,yyy,zzz,dddd,eeee,ssss,uuuu,vvvv,xxxx,yyyy,aaaaa,kkkkk,lllll	N	
DC	Wilkins	350A	8	VU	9-Sep-2010	9-Sep-2013	Y	9	(ppp),qqq,sss,ttt,www,yyy,ssss,uuuu,vvvv,xxxx,yyyy,aaaaa,kkkkk,lllll	N	
DC	Wilkins	350A	8	VU	12-Feb-2004	12-Feb-2016	N	9	(ppp),qqq,sss,ttt,www,yyy,zzz,dddd,eeee,ssss,uuuu,vvvv,xxxx,yyyy,aaaaa,kkkkk,lllll	N	
DC	Wilkins	350A	10	H	9-Sep-2010	9-Sep-2013	Y	9	(ppp),qqq,sss,ttt,yyy,ssss,uuuu,vvvv,xxxx,yyyy,aaaaa,kkkkk,lllll	N	
DC	Wilkins	350A	10	H	6-Apr-2006	6-Apr-2015	N	9	(ppp),qqq,sss,ttt,yyy,ssss,uuuu,vvvv,xxxx,yyyy,aaaaa,kkkkk,lllll	N	
DC	Wilkins	350A	10	VU	9-Sep-2010	9-Sep-2013	Y	9	(ppp),qqq,sss,ttt,yyy,ssss,uuuu,vvvv,xxxx,yyyy,aaaaa,kkkkk,lllll	N	
DC	Wilkins	350A	10	VU	6-Apr-2006	6-Apr-2015	N	9	(ppp),qqq,sss,ttt,yyy,ssss,uuuu,vvvv,xxxx,yyyy,aaaaa,kkkkk,lllll	N	
DC	Wilkins	350AR	2 1/2	H	16-Jun-2010	16-Jun-2013	N	9	(ppp),sss,ttt,qqq,yyy,zzz,dddd,ssss,uuuu,vvvv,xxxx,yyyy,aaaaa,kkkkk,lllll	N	
DC	Wilkins	350AR	2 1/2	H	9-Sep-2010	9-Sep-2013	Y	9	(ppp),sss,ttt,qqq,yyy,zzz,dddd,ssss,uuuu,vvvv,xxxx,yyyy,aaaaa,kkkkk,lllll	N	
DC	Wilkins	350AR	2 1/2	VU	16-Jun-2010	16-Jun-2013	N	9	(ppp),sss,ttt,qqq,yyy,zzz,dddd,ssss,uuuu,vvvv,xxxx,yyyy,aaaaa,kkkkk,lllll	N	
DC	Wilkins	350AR	2 1/2	VU	9-Sep-2010	9-Sep-2013	Y	9	(ppp),sss,ttt,qqq,yyy,zzz,dddd,ssss,uuuu,vvvv,xxxx,yyyy,aaaaa,kkkkk,lllll	N	
DC	Wilkins	350AR	3	H	16-Jun-2010	16-Jun-2013	N	9	(ppp),sss,ttt,qqq,yyy,zzz,dddd,ssss,uuuu,vvvv,xxxx,yyyy,aaaaa,kkkkk,lllll	N	
DC	Wilkins	350AR	3	H	9-Sep-2010	9-Sep-2013	Y	9	(ppp),sss,ttt,qqq,yyy,zzz,dddd,ssss,uuuu,vvvv,xxxx,yyyy,aaaaa,kkkkk,lllll	N	
DC	Wilkins	350AR	3	VU	16-Jun-2010	16-Jun-2013	N	9	(ppp),sss,ttt,qqq,yyy,zzz,dddd,ssss,uuuu,vvvv,xxxx,yyyy,aaaaa,kkkkk,lllll	N	
DC	Wilkins	350AR	3	VU	9-Sep-2010	9-Sep-2013	Y	9	(ppp),sss,ttt,qqq,yyy,zzz,dddd,ssss,uuuu,vvvv,xxxx,yyyy,aaaaa,kkkkk,lllll	N	
DC	Wilkins	350AR	4	H	9-Sep-2010	9-Sep-2013	Y	9	(ppp),qqq,sss,ttt,www,yyy,zzz,dddd,eeee,ssss,uuuu,vvvv,xxxx,yyyy,aaaaa,kkkkk,lllll	N	
DC	Wilkins	350AR	4	H	25-Mar-2010	25-Mar-2016	N	9	(ppp),qqq,sss,ttt,www,yyy,zzz,dddd,eeee,ssss,uuuu,vvvv,xxxx,yyyy,aaaaa,kkkkk,lllll	N	
DC	Wilkins	350AR	4	VU	9-Sep-2010	9-Sep-2013	Y	9	(ppp),qqq,sss,ttt,www,yyy,zzz,dddd,eeee,ssss,uuuu,vvvv,xxxx,yyyy,aaaaa,kkkkk,lllll	N	
DC	Wilkins	350AR	4	VU	25-Mar-2010	25-Mar-2016	N	9	(ppp),qqq,sss,ttt,www,yyy,zzz,dddd,eeee,ssss,uuuu,vvvv,xxxx,yyyy,aaaaa,kkkkk,lllll	N	
DC	Wilkins	350AR	6	H	9-Sep-2010	9-Sep-2013	Y	9	(ppp),qqq,sss,ttt,www,yyy,zzz,dddd,eeee,ssss,uuuu,vvvv,xxxx,yyyy,aaaaa,kkkkk,lllll	N	
DC	Wilkins	350AR	6	H	25-Mar-2010	25-Mar-2016	N	9	(ppp),qqq,sss,ttt,www,yyy,zzz,dddd,eeee,ssss,uuuu,vvvv,xxxx,yyyy,aaaaa,kkkkk,lllll	N	
DC	Wilkins	350AR	6	VU	9-Sep-2010	9-Sep-2013	Y	9	(ppp),qqq,sss,ttt,www,yyy,zzz,dddd,eeee,ssss,uuuu,vvvv,xxxx,yyyy,aaaaa,kkkkk,lllll	N	
DC	Wilkins	350AR	6	VU	25-Mar-2010	25-Mar-2016	N	9	(ppp),qqq,sss,ttt,www,yyy,zzz,dddd,eeee,ssss,uuuu,vvvv,xxxx,yyyy,aaaaa,kkkkk,lllll	N	
DC	Wilkins	350AR	8	H	9-Sep-2010	9-Sep-2013	Y	9	(ppp),qqq,sss,ttt,www,yyy,zzz,dddd,eeee,ssss,uuuu,vvvv,xxxx,yyyy,aaaaa,kkkkk,lllll	N	
DC	Wilkins	350AR	8	H	25-Mar-2010	25-Mar-2016	N	9	(ppp),qqq,sss,ttt,www,yyy,zzz,dddd,eeee,ssss,uuuu,vvvv,xxxx,yyyy,aaaaa,kkkkk,lllll	N	
DC	Wilkins	350AR	8	VU	9-Sep-2010	9-Sep-2013	Y	9	(ppp),qqq,sss,ttt,www,yyy,zzz,dddd,eeee,ssss,uuuu,vvvv,xxxx,yyyy,aaaaa,kkkkk,lllll	N	
DC	Wilkins	350AR	8	VU	25-Mar-2010	25-Mar-2016	N	9	(ppp),qqq,sss,ttt,www,yyy,zzz,dddd,eeee,ssss,uuuu,vvvv,xxxx,yyyy,aaaaa,kkkkk,lllll	N	
DC	Wilkins	350AR	10	H	9-Sep-2010	9-Sep-2013	Y	9	(ppp),qqq,sss,ttt,www,yyy,zzz,dddd,eeee,ssss,uuuu,vvvv,xxxx,yyyy,aaaaa,kkkkk,lllll	N	
DC	Wilkins	350AR	10	H	25-Mar-2010	25-Mar-2016	N	9	(ppp),qqq,sss,ttt,www,yyy,zzz,dddd,eeee,ssss,uuuu,vvvv,xxxx,yyyy,aaaaa,kkkkk,lllll	N	
DC	Wilkins	350AR	10	VU	9-Sep-2010	9-Sep-2013	Y	9	(ppp),qqq,sss,ttt,www,yyy,zzz,dddd,eeee,ssss,uuuu,vvvv,xxxx,yyyy,aaaaa,kkkkk,lllll	N	
DC	Wilkins	350AR	10	VU	25-Mar-2010	25-Mar-2016	N	9	(ppp),qqq,sss,ttt,www,yyy,zzz,dddd,eeee,ssss,uuuu,vvvv,xxxx,yyyy,aaaaa,kkkkk,lllll	N	
DC	Wilkins	350ARXL	2 1/2	H	5-Jun-2010	5-Jun-2013	Y	9	(gg),hh,ppp,qqq,ssss,tttt,vvvv,wwww,yyyy,zzzz	N	
DC	Wilkins	350ARXL	2 1/2	VU	5-Jun-2010	5-Jun-2013	Y	9	(gg),hh,ppp,qqq,ssss,tttt,vvvv,wwww,yyyy,zzzz	N	
DC	Wilkins	350ARXL	3	H	5-Jun-2010	5-Jun-2013	Y	9	(gg),hh,ppp,qqq,ssss,tttt,vvvv,wwww,yyyy,zzzz	N	
DC	Wilkins	350ARXL	3	VU	5-Jun-2010	5-Jun-2013	Y	9	(gg),hh,ppp,qqq,vvv,www,ssss,tttt,vvvv,wwww,yyyy,zzzz	N	
DC	Wilkins	350ARXL	4	H	5-Jun-2010	5-Jun-2013	Y	9	(gg),hh,ppp,qqq,vvv,www,ssss,tttt,vvvv,wwww,yyyy,zzzz	N	
DC	Wilkins	350ARXL	4	VU	5-Jun-2010	5-Jun-2013	Y	9	(gg),hh,ppp,qqq,vvv,www,ssss,tttt,vvvv,wwww,yyyy,zzzz	N	
DC	Wilkins	350ARXL	6	H	5-Jun-2010	5-Jun-2013	Y	9	(gg),hh,ppp,qqq,vvv,www,ssss,tttt,vvvv,wwww,yyyy,zzzz	N	
DC	Wilkins	350ARXL	6	VU	5-Jun-2010	5-Jun-2013	Y	9	(gg),hh,ppp,qqq,vvv,www,ssss,tttt,vvvv,wwww,yyyy,zzzz	N	
DC	Wilkins	350ARXL	8	H	5-Jun-2010	5-Jun-2013	Y	9	(gg),hh,ppp,qqq,vvv,www,ssss,tttt,vvvv,wwww,yyyy,zzzz	N	
DC	Wilkins	350ARXL	8	VU	5-Jun-2010	5-Jun-2013	Y	9	(gg),hh,ppp,qqq,vvv,www,ssss,tttt,vvvv,wwww,yyyy,zzzz	N	
DC	Wilkins	350ARXL	10	H	5-Jun-2010	5-Jun-2013	Y	9	(gg),hh,ppp,qqq,vvv,www,ssss,tttt,vvvv,wwww,yyyy,zzzz	N	
DC	Wilkins	350ARXL	10	VU	5-Jun-2010	5-Jun-2013	Y	9	(hh),ssss,tttt,xxxx,yyyy,zzzz,aaaaa	N	
DC	Wilkins	350AST	2 1/2	H	29-Nov-2011	29-Oct-2014	Y	10	(ppp),qqq,yyy,ssss,uuuu,vvvv,xxxx,yyyy,aaaaa,kkkkk,lllll	N	
DC	Wilkins	350AST	2 1/2	VU	9-Nov-2012	9-Nov-2015	Y	10	(ppp),qqq,yyy,ssss,uuuu,vvvv,xxxx,yyyy,aaaaa,kkkkk,lllll	N	
DC	Wilkins	350AST	3	H	29-Nov-2011	29-Oct-2014	Y	10	(ppp),qqq,yyy,ssss,uuuu,vvvv,xxxx,yyyy,aaaaa,kkkkk,lllll	N	
DC	Wilkins	350AST	3	VU	9-Nov-2012	9-Nov-2015	Y	10	(ppp),qqq,yyy,ssss,uuuu,vvvv,xxxx,yyyy,aaaaa,kkkkk,lllll	N	
DC	Wilkins	350AST	4	H	29-Nov-2011	29-Oct-2014	Y	10	(ppp),qqq,yyy,ssss,uuuu,vvvv,xxxx,yyyy,aaaaa,kkkkk,lllll	N	
DC	Wilkins	350AST	4	VU	9-Nov-2012	9-Nov-2015	Y	10	(ppp),qqq,yyy,ssss,uuuu,vvvv,xxxx,yyyy,aaaaa,kkkkk,lllll	N	
DC	Wilkins	350AST	6	H	27-Mar-2012	27-Mar-2015	Y	10	(yyy),ssss,uuuu,vvvv,xxxx,yyyy,aaaaa,kkkkk,lllll	N	
DC	Wilkins	350AST	6	VU	24-Oct-2012	24-Oct-2015	Y	10	(yyy), ssss, uuuu,vvvv, xxxx, yyyy, aaaaa,kkkkk, lllll	N	
DC	Wilkins	350AST	8	H	20-Feb-2014		Y	10	(yyy), ssss,uuuu,vvvv,xxxx,yyyy,aaaaa,kkkkk,lllll	N	
DC	Wilkins	350AST	8	VU	20-Feb-2014		Y	10	(yyy), ssss,uuuu,vvvv,xxxx,yyyy,aaaaa,kkkkk,lllll	N	
DC	Wilkins	350AST	10	H	20-Feb-2014		Y	10	(yyy), ssss,uuuu,vvvv,xxxx,yyyy,aaaaa,kkkkk,lllll	N	
DC	Wilkins	350AST	10	VU	20-Feb-2014		Y	10	(yyy), ssss,uuuu,vvvv,xxxx,yyyy,aaaaa,kkkkk,lllll	N	
DC	Wilkins	350ASTR	2 1/2	H	12-Jun-2015		Y	10	(ppp),qqq,yyy,ssss,uuuu,vvvv,xxxx,yyyy,aaaaa,kkkkk,lllll	N	
DC	Wilkins	350ASTR	2 1/2	VU	12-Jun-2015		Y	10	(ppp),qqq,yyy,ssss,uuuu,vvvv,xxxx,yyyy,aaaaa,kkkkk,lllll	N	
DC	Wilkins	350ASTR	3	H	12-Jun-2015		Y	10	(ppp),qqq,yyy,ssss,uuuu,vvvv,xxxx,yyyy,aaaaa,kkkkk,lllll	N	
DC	Wilkins	350ASTR	3	VU	12-Jun-2015		Y	10	(ppp),qqq,yyy,ssss,uuuu,vvvv,xxxx,yyyy,aaaaa,kkkkk,lllll	N	
DC	Wilkins	350ASTR	4	H	12-Jun-2015		Y	10	(ppp),qqq,yyy,ssss,uuuu,vvvv,xxxx,yyyy,aaaaa,kkkkk,lllll	N	
DC	Wilkins	350ASTR	4	VU	12-Jun-2015		Y	10	(ppp),qqq,yyy,ssss,uuuu,vvvv,xxxx,yyyy,aaaaa,kkkkk,lllll	N	
DC	Wilkins	350ASTR	6	H	12-Jun-2015		Y	10	(yyy), ssss, uuuu,vvvv, xxxx, yyyy, aaaaa,kkkkk, lllll	N	
DC	Wilkins	350ASTR	6	VU	12-Jun-2015		Y	10	(yyy), ssss, uuuu,vvvv, xxxx, yyyy, aaaaa,kkkkk, lllll	N	
DC	Wilkins	350ASTR	8	H	25-Feb-2014		Y	10	(yyy), ssss,uuuu,vvvv,xxxx,yyyy,aaaaa,kkkkk,lllll	N	
DC	Wilkins	350ASTR	8	VU	25-Feb-2014		Y	10	(yyy), ssss,uuuu,vvvv,xxxx,yyyy,aaaaa,kkkkk,lllll	N	
DC	Wilkins	350ASTR	10	H	25-Feb-2014		Y	10	(yyy), ssss,uuuu,vvvv,xxxx,yyyy,aaaaa,kkkkk,lllll	N	
DC	Wilkins	350ASTR	10	VU	25-Feb-2014		Y	10	(yyy), ssss,uuuu,vvvv,xxxx,yyyy,aaaaa,kkkkk,lllll	N	
DC	Wilkins	350AXL	2 1/2	H	14-Apr-2010	14-Apr-2013	N	9	(ppp),qqq,sss,ttt,yyy,ssss,uuuu,vvvv,xxxx,yyyy,aaaaa	N	
DC	Wilkins	350AXL	2 1/2	H	14-Apr-2010	14-Apr-2013	Y	9	(ppp),qqq,sss,ttt,yyy,ssss,uuuu,vvvv,xxxx,yyyy,aaaaa	N	
DC	Wilkins	350AXL	2 1/2	VU	14-Apr-2010	14-Apr-2013	N	9	(ppp),qqq,sss,ttt,yyy,ssss,uuuu,vvvv,xxxx,yyyy,aaaaa	N	
DC	Wilkins	350AXL	2 1/2	VU	14-Apr-2010	14-Apr-2013	Y	9	(ppp),qqq,sss,ttt,yyy,ssss,uuuu,vvvv,xxxx,yyyy,aaaaa	N	
DC	Wilkins	350AXL	3	H	14-Apr-2010	14-Apr-2013	N	9	(ppp),qqq,sss,ttt,yyy,ssss,uuuu,vvvv,xxxx,yyyy,aaaaa	N	
DC	Wilkins	350AXL	3	H	14-Apr-2010	14-Apr-2013	Y	9	(ppp),qqq,sss,ttt,yyy,ssss,uuuu,vvvv,xxxx,yyyy,aaaaa	N	
DC	Wilkins	350AXL	3	VU	14-Apr-2010	14-Apr-2013	N	9	(ppp),qqq,sss,ttt,yyy,ssss,uuuu,vvvv,xxxx,yyyy,aaaaa	N	
DC	Wilkins	350AXL	3	VU	14-Apr-2010	14-Apr-2013	Y	9	(ppp),qqq,sss,ttt,yyy,ssss,uuuu,vvvv,xxxx,yyyy,aaaaa	N	
DC	Wilkins	350AXL	4	H	14-Apr-2010	14-Apr-2013	N	9	(ppp),qqq,sss,ttt,www,yyy,ssss,uuuu,vvvv,xxxx,yyyy,aaaaa	N	
DC	Wilkins	350AXL	4	H	14-Apr-2010	14-Apr-2013	Y	9	(ppp),qqq,sss,ttt,www,yyy,ssss,uuuu,vvvv,xxxx,yyyy,aaaaa	N	
DC	Wilkins	350AXL	4	VU	14-Apr-2010	14-Apr-2013	N	9	(ppp),qqq,sss,ttt,yyy,ssss,uuuu,vvvv,xxxx,yyyy,aaaaa	N	
DC	Wilkins	350AXL	4	VU	14-Apr-2010	14-Apr-2013	Y	9	(ppp),qqq,sss,ttt,yyy,ssss,uuuu,vvvv,xxxx,yyyy,aaaaa	N	
DC	Wilkins	350AXL	6	H	14-Apr-2010	14-Apr-2013	N	9	(ppp),sss,ttt,qqq,yyy,zzz,dddd,ssss,uuuu,vvvv,xxxx,yyyy,aaaaa	N	
DC	Wilkins	350AXL	6	H	14-Apr-2010	14-Apr-2013	Y	9	(ppp),sss,ttt,qqq,yyy,zzz,dddd,ssss,uuuu,vvvv,xxxx,yyyy,aaaaa	N	
DC	Wilkins	350AXL	6	VU	14-Apr-2010	14-Apr-2013	N	9	(ppp),sss,ttt,qqq,yyy,zzz,dddd,ssss,uuuu,vvvv,xxxx,yyyy,aaaaa	N	
DC	Wilkins	350AXL	6	VU	14-Apr-2010	14-Apr-2013	Y	9	(ppp),sss,ttt,qqq,yyy,zzz,dddd,ssss,uuuu,vvvv,xxxx,yyyy,aaaaa	N	
DC	Wilkins	350AXL	8	H	25-Mar-2010	25-Mar-2016	N	9	(ppp),qqq,sss,ttt,www,yyy,zzz,dddd,eeee,ssss,uuuu,vvvv,xxxx,yyyy,aaaaa	N	
DC	Wilkins	350AXL	8	H	25-Mar-2010	25-Mar-2016	Y	9	(ppp),qqq,sss,ttt,www,yyy,zzz,dddd,eeee,ssss,uuuu,vvvv,xxxx,yyyy,aaaaa	N	
DC	Wilkins	350AXL	8	VU	25-Mar-2010	25-Mar-2016	N	9	(ppp),qqq,sss,ttt,www,yyy,zzz,dddd,eeee,ssss,uuuu,vvvv,xxxx,yyyy,aaaaa	N	
DC	Wilkins	350AXL	8	VU	25-Mar-2010	25-Mar-2016	Y	9	(ppp),qqq,sss,ttt,www,yyy,zzz,dddd,eeee,ssss,uuuu,vvvv,xxxx,yyyy,aaaaa	N	
DC	Wilkins	350AXL	10	H	25-Mar-2010	25-Mar-2016	Y	9	(ppp),qqq,sss,ttt,www,yyy,zzz,dddd,eeee,ssss,uuuu,vvvv,xxxx,yyyy,aaaaa	N	
DC	Wilkins	350AXL	10	VU	25-Mar-2010	25-Mar-2016	Y	9	(ppp),qqq,sss,ttt,www,yyy,zzz,dddd,eeee,ssss,uuuu,vvvv,xxxx,yyyy,aaaaa	N	
DC	Wilkins	350XL	3/4	H	30-Aug-2006	30-Aug-2015	Y	9	(iiii)	N	
DC	Wilkins	350XL	3/4	VU	30-Aug-2006	30-Aug-2015	Y	9	(iiii)	N	
DC	Wilkins	350XL	1	H	27-Oct-2006	27-Oct-2015	Y	9	(iiii)	N	
DC	Wilkins	350XL	1	VU	27-Oct-2006	27-Oct-2015	Y	9	(iiii)	N	
DC	Wilkins	350XL	1 1/4	H	8-Jan-2009	8-Jan-2015	Y	9	(int)	N	
DC	Wilkins	350XL	1 1/4	VU	8-Jan-2009	8-Jan-2015	Y	9	(int)	N	
DC	Wilkins	350XL	1 1/2	H	8-Jan-2009	8-Jan-2015	Y	9	(int)	N	
DC	Wilkins	350XL	1 1/2	VU	8-Jan-2009	8-Jan-2015	Y	9	(int)	N	
DC	Wilkins	350XL	2	H	8-Jan-2009	8-Jan-2015	Y	9	(int)	N	
DC	Wilkins	350XL	2	VU	8-Jan-2009	8-Jan-2015	Y	9	(int)	N	
DC	Wilkins	350XL	2 1/2	H	14-Apr-2010	14-Apr-2013	N	9	ee,ff,ll,mm,tt,uu,yy,zz,zzz,dddd	N	
DC	Wilkins	350XL	2 1/2	H	14-Apr-2010	14-Apr-2013	Y	9	(gg),hh,ppp,qqq,ssss,tttt,vvvv,wwww,yyyy,zzzz	N	
DC	Wilkins	350XL	2 1/2	VU	14-Apr-2010	14-Apr-2013	N	9	ee,ff,ll,mm,tt,uu,yy,zz,zzz,dddd	N	
DC	Wilkins	350XL	2 1/2	VU	14-Apr-2010	14-Apr-2013	Y	9	(gg),hh,ppp,qqq,ssss,tttt,vvvv,wwww,yyyy,zzzz	N	
DC	Wilkins	350XL	3	H	14-Apr-2010	14-Apr-2013	N	9	ee,ff,ll,mm,tt,uu,yy,zz,zzz,dddd	N	
DC	Wilkins	350XL	3	H	14-Apr-2010	14-Apr-2013	Y	9	(gg),hh,ppp,qqq,ssss,tttt,vvvv,wwww,yyyy,zzzz	N	
DC	Wilkins	350XL	3	VU	14-Apr-2010	14-Apr-2013	N	9	ee,ff,ll,mm,tt,uu,yy,zz,zzz,dddd	N	
DC	Wilkins	350XL	3	VU	14-Apr-2010	14-Apr-2013	Y	9	(gg),hh,ppp,qqq,ssss,tttt,vvvv,wwww,yyyy,zzzz	N	

Type	Manufacturer	Model	Size	Orientation(s)	Approved	Renewed	<0.25% Pb	Manual	Shutoffs	Spare Parts	Bypass
DC	Wilkins	350XL	4	H	14-Apr-2010	14-Apr-2013	N	9	ee,ff,ll,mm,tt,uu,yy,zz,zzz,dddd,eeee	N	
DC	Wilkins	350XL	4	H	14-Apr-2010	14-Apr-2013	Y	9	(gg),hh,ppp,qqq,vvv,www,ssss,tttt,vvvv,wwww,yyyy,zzzz	N	
DC	Wilkins	350XL	4	VU	14-Apr-2010	14-Apr-2013	N	9	ee,ff,ll,mm,tt,uu,yy,zz,zzz,dddd,eeee	N	
DC	Wilkins	350XL	4	VU	14-Apr-2010	14-Apr-2013	Y	9	(gg),hh,ppp,qqq,vvv,www,ssss,tttt,vvvv,wwww,yyyy,zzzz	N	
DC	Wilkins	350XL	6	H	14-Apr-2010	14-Apr-2013	N	9	ee,ff,ll,mm,tt,uu,yy,zz,zzz,dddd,eeee	N	
DC	Wilkins	350XL	6	H	14-Apr-2010	14-Apr-2013	Y	9	(gg),hh,ppp,qqq,vvv,www,ssss,tttt,vvvv,wwww,yyyy,zzzz	N	
DC	Wilkins	350XL	6	VU	14-Apr-2010	14-Apr-2013	N	9	ee,ff,ll,mm,tt,uu,yy,zz,zzz,dddd,eeee	N	
DC	Wilkins	350XL	6	VU	14-Apr-2010	14-Apr-2013	Y	9	(gg),hh,ppp,qqq,vvv,www,ssss,tttt,vvvv,wwww,yyyy,zzzz	N	
DC	Wilkins	350XL	8	H	25-Mar-2010	25-Mar-2016	N	9	ee,ff,ll,mm,tt,uu,yy,zz,zzz,dddd,eeee	N	
DC	Wilkins	350XL	8	H	25-Mar-2010	25-Mar-2016	Y	9	(gg),hh,ppp,qqq,vvv,www,ssss,tttt,vvvv,wwww,yyyy,zzzz	N	
DC	Wilkins	350XL	8	VU	25-Mar-2010	25-Mar-2016	N	9	ee,ff,ll,mm,tt,uu,yy,zz,zzz,dddd,eeee	N	
DC	Wilkins	350XL	8	VU	25-Mar-2010	25-Mar-2016	Y	9	(gg),hh,ppp,qqq,vvv,www,ssss,tttt,vvvv,wwww,yyyy,zzzz	N	
DC	Wilkins	350XL	10	H	25-Mar-2010	25-Mar-2016	N	9	ee,ff,ll,mm,tt,uu,yy,zz,zzz,dddd,eeee	N	
DC	Wilkins	350XL	10	H	25-Mar-2010	25-Mar-2016	Y	9	(ppp),qqq,sss,ttt,yyy,ssss,uuuu,vvvv,xxxx,yyyy,aaaaa	N	
DC	Wilkins	350XL	10	VU	25-Mar-2010	25-Mar-2016	N	9	ee,ff,ll,mm,tt,uu,yy,zz,zzz,dddd,eeee	N	
DC	Wilkins	350XL	10	VU	25-Mar-2010	25-Mar-2016	Y	9	(ppp),qqq,sss,ttt,yyy,ssss,uuuu,vvvv,xxxx,yyyy,aaaaa	N	
DC	Wilkins	350XL	12	H	25-Mar-2010	25-Mar-2016	Y	9	(hh),ssss,tttt,uuuu,vvvv,wwww,xxxx,yyyy,zzzz,aaaaa	N	
DC	Wilkins	450XL	2 1/2	VUVD	14-Apr-2010	14-Apr-2013	N	9	(gg),hh,ppp,qqq,ssss,tttt,vvvv,wwww,yyyy,zzzz	N	
DC	Wilkins	450XL	2 1/2	VUVD	14-Apr-2010	14-Apr-2013	Y	9	(gg),hh,ppp,qqq,ssss,tttt,vvvv,wwww,yyyy,zzzz	N	
DC	Wilkins	450XL	3	VUVD	14-Apr-2010	14-Apr-2013	N	9	(gg),hh,ppp,qqq,ssss,tttt,vvvv,wwww,yyyy,zzzz	N	
DC	Wilkins	450XL	3	VUVD	14-Apr-2010	14-Apr-2013	Y	9	(gg),hh,ppp,qqq,vvv,www,ssss,tttt,vvvv,wwww,yyyy,zzzz	N	
DC	Wilkins	450XL	4	VUVD	14-Apr-2010	14-Apr-2013	N	9	(gg),hh,ppp,qqq,vvv,www,ssss,tttt,vvvv,wwww,yyyy,zzzz	N	
DC	Wilkins	450XL	4	VUVD	14-Apr-2010	14-Apr-2013	Y	9	(gg),hh,ppp,qqq,vvv,www,ssss,tttt,vvvv,wwww,yyyy,zzzz	N	
DC	Wilkins	450XL	6	VUVD	14-Apr-2010	14-Apr-2013	N	9	(gg),hh,ppp,qqq,vvv,www,ssss,tttt,vvvv,wwww,yyyy,zzzz	N	
DC	Wilkins	450XL	6	VUVD	14-Apr-2010	14-Apr-2013	Y	9	(gg),hh,ppp,qqq,vvv,www,ssss,tttt,vvvv,wwww,yyyy,zzzz	N	
DC	Wilkins	450XL	8	VUVD	25-Mar-2010	25-Mar-2016	N	9	(gg),hh,ppp,qqq,vvv,www,ssss,tttt,vvvv,wwww,yyyy,zzzz	N	
DC	Wilkins	450XL	8	VUVD	25-Mar-2010	25-Mar-2016	Y	9	(gg),hh,ppp,qqq,vvv,www,ssss,tttt,vvvv,wwww,yyyy,zzzz	N	
DC	Wilkins	450XL	10	VUVD	25-Mar-2010	25-Mar-2016	N	9	(gg),hh,ppp,qqq,vvv,www,ssss,tttt,vvvv,wwww,yyyy,zzzz	N	
DC	Wilkins	450XL	10	VUVD	25-Mar-2010	25-Mar-2016	Y	9	(hh),ssss,tttt,xxxx,yyyy,zzzz,aaaaa	N	
DC	Wilkins	550	3/4	H	11-Oct-1976	11-Oct-2015	N	5	(ppp),qqq,sss,ttt,yyy,ssss,uuuu,vvvv,xxxx,yyyy,aaaaa	Y	
DC	Wilkins	550	1	H	11-Oct-1976	11-Oct-2015	N	5	(ppp),qqq,sss,ttt,yyy,ssss,uuuu,vvvv,xxxx,yyyy,aaaaa	Y	
DC	Wilkins	550	1 1/4	H	11-Oct-1976	11-Oct-2015	N	5	(ppp),qqq,sss,ttt,yyy,ssss,uuuu,vvvv,xxxx,yyyy,aaaaa	Y	
DC	Wilkins	550	1 1/2	H	11-Oct-1976	11-Oct-2015	N	5	(ppp),qqq,sss,ttt,yyy,ssss,uuuu,vvvv,xxxx,yyyy,aaaaa	Y	
DC	Wilkins	550	1 1/2	H	11-Oct-1976	11-Oct-2015	N	5	(ppp),qqq,sss,ttt,yyy,ssss,uuuu,vvvv,xxxx,yyyy,aaaaa	Y	
DC	Wilkins	550	2	H	11-Oct-1976	11-Oct-2015	N	5	(ppp),qqq,sss,ttt,yyy,ssss,uuuu,vvvv,xxxx,yyyy,aaaaa	Y	
DC	Wilkins	550	2 1/2	H	25-Sep-1986	25-Sep-2013	N	7	(ppp),qqq,sss,ttt,yyy,ssss,uuuu,vvvv,xxxx,yyyy,aaaaa	Y	
DC	Wilkins	550	3	H	20-Aug-1979	20-Aug-2015	N	5	(ppp),qqq,sss,ttt,yyy,ssss,uuuu,vvvv,xxxx,yyyy,aaaaa	Y	
DC	Wilkins	550	4	H	20-Jun-1980	20-Jun-2013	N	5	(ppp),qqq,sss,ttt,www,yyy,ssss,uuuu,vvvv,xxxx,yyyy,aaaaa	Y	
DC	Wilkins	550	6	H	6-Jul-1981	6-Jul-2014	N	6	(ppp),qqq,sss,ttt,www,yyy,ssss,uuuu,vvvv,xxxx,yyyy,aaaaa	Y	
DC	Wilkins	550A	3/4	H	17-Apr-1987	17-Apr-2014	N	7	(ppp),qqq,sss,ttt,yyy,ssss,uuuu,vvvv,xxxx,yyyy,aaaaa	Y	
DC	Wilkins	550A	1	H	17-Apr-1987	17-Apr-2014	N	7	(ppp),qqq,sss,ttt,yyy,ssss,uuuu,vvvv,xxxx,yyyy,aaaaa	Y	
DC	Wilkins	550M	8	H	15-Mar-1989	15-Mar-2016	N	8	(ppp),sss,ttt,qqq,yyy,zzz,dddd,ssss,uuuu,vvvv,xxxx,yyyy,aaaaa	Y	
DC	Wilkins	550M	10	H	11-Apr-1983	11-Apr-2016	N	6	(ppp),sss,ttt,qqq,yyy,zzz,dddd,ssss,uuuu,vvvv,xxxx,yyyy,aaaaa	Y	
DC	Wilkins	950	3/4	H	18-Jul-1991	18-Jul-2015	N	8	(ppp),sss,ttt,qqq,yyy,zzz,dddd,ssss,uuuu,vvvv,xxxx,yyyy,aaaaa	Y	
DC	Wilkins	950	1	H	18-Jul-1991	18-Jul-2015	N	8	(ppp),sss,ttt,qqq,yyy,zzz,dddd,ssss,uuuu,vvvv,xxxx,yyyy,aaaaa	Y	
DC	Wilkins	950	1 1/4	H	5-Apr-1991	5-Apr-2015	N	8	(ppp),qqq,sss,ttt,www,yyy,zzz,dddd,eeee,ssss,uuuu,vvvv,xxxx,yyyy,aaaaa	Y	
DC	Wilkins	950	1 1/2	H	5-Apr-1991	5-Apr-2015	N	8	(ppp),qqq,sss,ttt,www,yyy,zzz,dddd,eeee,ssss,uuuu,vvvv,xxxx,yyyy,aaaaa	Y	
DC	Wilkins	950	2	H	5-Apr-1991	5-Apr-2015	N	8	(ppp),qqq,sss,ttt,www,yyy,zzz,dddd,eeee,ssss,uuuu,vvvv,xxxx,yyyy,aaaaa	Y	
DC	Wilkins	950	2 1/2	H	26-Nov-1991	26-Nov-2015	N	8	(ppp),qqq,sss,ttt,www,yyy,zzz,dddd,eeee,ssss,uuuu,vvvv,xxxx,yyyy,aaaaa	Y	
DC	Wilkins	950	3	H	8-Nov-1991	8-Nov-2015	N	8	(ppp),qqq,sss,ttt,www,yyy,zzz,dddd,eeee,ssss,uuuu,vvvv,xxxx,yyyy,aaaaa	N	
DC	Wilkins	950	4	H	8-Nov-1991	8-Nov-2015	N	8	(ppp),qqq,sss,ttt,www,yyy,zzz,dddd,eeee,ssss,uuuu,vvvv,xxxx,yyyy,aaaaa	Y	
DC	Wilkins	950	6	H	18-Mar-1992	18-Mar-2016	N	8	(ppp),qqq,sss,ttt,www,yyy,zzz,dddd,eeee,ssss,uuuu,vvvv,xxxx,yyyy,aaaaa	Y	
DC	Wilkins	950	8	H	18-Mar-1989	18-Mar-2016	N	8	(gg),hh,ppp,qqq,ssss,uuuu,vvvv,xxxx,yyyy,aaaaa	N	
DC	Wilkins	950A	3/4	H	18-Jul-1991	18-Jul-2015	N	8	(ppp),qqq,sss,ttt,www,yyy,ssss,uuuu,vvvv,xxxx,yyyy,aaaaa	Y	
DC	Wilkins	950A	1	H	18-Jul-1991	18-Jul-2015	N	8	(ppp),qqq,sss,ttt,www,yyy,ssss,uuuu,vvvv,xxxx,yyyy,aaaaa	Y	
DC	Wilkins	950A	1 1/4	H	18-Jul-1991	18-Jul-2015	N	8	ii	Y	
DC	Wilkins	950A	1 1/2	H	18-Jul-1991	18-Jul-2015	N	8	ii	Y	
DC	Wilkins	950A	2	H	18-Jul-1991	18-Jul-2015	N	8	ii	Y	
DC	Wilkins	950XL	3/4	H	2-Nov-1992	2-Nov-2013	N	8	(ii),ooo	N	
DC	Wilkins	950XL	3/4	VU	12-Dec-1996	12-Dec-2014	N	8	(ii),ooo	N	
DC	Wilkins	950XL	1	H	2-Nov-1992	2-Nov-2013	N	8	(ii),ooo	N	
DC	Wilkins	950XL	1 1/4	H	2-Nov-1992	2-Nov-2013	N	8	(ii),ooo,ggg	N	
DC	Wilkins	950XL	1 1/2	H	2-Nov-1992	2-Nov-2013	N	8	(ii),ooo	N	
DC	Wilkins	950XL	2	H	2-Nov-1992	2-Nov-2013	N	8	(ii),bbb,ooo	N	
DC	Wilkins	950XLD	3/4	H	15-Sep-1999	15-Sep-2014	N	9	(ii),ooo	N	
DC	Wilkins	950XLD	3/4	H	15-Sep-1999	15-Sep-2014	Y	9	(ii),ooo	N	
DC	Wilkins	950XLD	3/4	H	3-Jul-2013		N	10	(iii)	N	
DC	Wilkins	950XLD	3/4	H	3-Jul-2013		Y	10	(iii)	N	
DC	Wilkins	950XLD	3/4	VU	5-Jan-2000	5-Jan-2014	N	9	(ii),ooo	N	
DC	Wilkins	950XLD	3/4	VU	5-Jan-2000	5-Jan-2014	Y	9	(ii),ooo	N	
DC	Wilkins	950XLD	3/4	VU	3-Jul-2013		N	10	(iii)	N	
DC	Wilkins	950XLD	3/4	VU	3-Jul-2013		Y	10	(iii)	N	
DC	Wilkins	950XLT	3/4	H	9-May-1997	9-May-2015	N	9	(ii),ooo	N	
DC	Wilkins	950XLT	1	H	9-May-1997	9-May-2015	N	9	(ii),ooo	N	
DC	Wilkins	950XLT	1 1/4	H	19-Jun-1998	19-Jun-2013	N	9	(ii),ooo	N	
DC	Wilkins	950XLT	1 1/2	H	9-Apr-1998	9-Apr-2016	N	9	(ii),ooo	N	
DC	Wilkins	950XLT	2	H	9-Apr-1998	9-Apr-2016	N	9	(ii),ooo,bbbbb,ccccc	N	
DC	Wilkins	950XLT2	3/4	H	21-Aug-2009	21-Aug-2015	Y	9	(iiii)	N	
DC	Wilkins	950XLT2	1	H	21-Aug-2009	21-Aug-2015	Y	9	(iiii)	N	
DC	Wilkins	950XLT2	1 1/4	H	21-Aug-2009	21-Aug-2015	Y	9	(iiii)	N	
DC	Wilkins	950XLT2	1 1/2	H	21-Aug-2009	21-Aug-2015	Y	9	(iiii)	N	
DC	Wilkins	950XLT2	2	H	21-Aug-2009	21-Aug-2015	Y	9	(iiii)	N	
DC	Wilkins	950XLT2U	3/4	H	22-Feb-2011	22-Feb-2014	Y	9	(mmmmm)	N	
DC	Wilkins	950XLTBF	2	H	22-Feb-2011	22-Feb-2014	N	9	(bbbbb)	N	
DC	Wilkins	950XLTBFSS	2	H	22-Feb-2011	22-Feb-2014	N	9	(ccccc)	N	
DC	Wilkins	950XLTU	3/4	H	14-Aug-2006	14-Aug-2015	N	9	(ggg),xxx	N	
DC	Wilkins	950XLTU	1	H	14-Aug-2006	14-Aug-2015	N	9	(ggg),xxx	N	
DC	Wilkins	950XLU	3/4	H	15-Feb-1994	15-Feb-2015	N	8	(ggg),xxx	N	
DC	Wilkins	950XLU	1	H	15-Feb-1994	15-Feb-2015	N	8	(ggg),xxx	N	
DC	Wilkins	950XLU	1 1/2	H	15-Feb-1994	15-Feb-2015	N	8	(ggg),xxx	N	
DC	Wilkins	950XLU	2	H	15-Feb-1994	15-Feb-2015	N	8	(ggg),xxx	N	
DC	Wilkins	MBD	8								
DC	Wilkins	MBD	10								
DC	Wilkins	350D	3/4	H	19-May-2009	19-May-2015	N	9	(ii), ooo	N	
DC	Wilkins	350D	3/4	VU	22-Jun-2009	22-Jun-2015	N	9	(ii), ooo	N	
DCDA	Ames	3000-1SS	12	H	4-Dec-2009	4-Dec-2015	N	9	(mm), ll	N	Ames 200B 3/4" (H); Watts 719QT 3/4" (H)
DCDA	Ames	3000-1SS	12	VU	22-Feb-2011	22-Feb-2014	N	9	(mm), ll	N	Ames 200B 3/4" (VU); Watts 719QT 3/4" (VU)
DCDA	Ames	3000B	2	H	16-Jun-1997	16-Jun-2015	N	9	(bbb),jjjj,rrrrr	N	Ames 2000B 1/2" (H), Watts 007QT 1/2" (H)
DCDA	Ames	3000B	2	VU	16-Jun-1997	16-Jun-2015	N	9	(bbb),jjjj,rrrrr	N	Ames 2000B 1/2" (VU), Watts 007QT 1/2" (VU)
DCDA	Ames	3000B-FP	2	H	1-Sep-2009	1-Sep-2015	N	9	(eeeee)	N	Ames 2000B 1/2" (H), Watts 007QT 1/2" (H)
DCDA	Ames	3000BM1	2	H	19-Jun-2015		N	9	(eeeee), bbb, jjjj,rrrrr	N	Ames 2000B 1/2" (H), Watts 007QT 1/2" (H)
DCDA	Ames	3000BM1	2	VU	19-Jun-2015		N	9	(eeeee), bbb, jjjj,rrrrr	N	Ames 2000B 1/2" (VU), Watts 007QT 1/2" (VU)
DCDA	Ames	3000CIV	4	H	27-Jul-1987	27-Jul-2014	N	6	(pp),hh,uu,eee	N	Ames 2000B 1/2"(H),Watts 007QT 1/2"(H)
DCDA	Ames	3000CIV	4	VU	27-Aug-1996	27-Aug-2014	N	8	(pp),hh,uu,eee	N	Ames 2000B 1/2"(VU),Watts 007QT 1/2"(VU)
DCDA	Ames	3000CIV	6	H	27-Jul-1987	27-Jul-2014	N	6	(pp),hh,uu,eee	N	Ames 2000B 1/2"(H),Watts 007QT 1/2"(H)
DCDA	Ames	3000CIV	6	VU	5-Dec-1996	5-Dec-2014	N	8	(pp),hh,mm,uu,eee	N	Ames 2000B 1/2" (VU), Watts 007QT 1/2" (VU)
DCDA	Ames	3000CIV	8	H	19-Apr-1987	19-Apr-2014	N	6	(pp),hh,mm,uu,eee	N	Ames 2000B 1/2"(H),Watts 007QT 1/2"(H)
DCDA	Ames	3000CIV	8	VU	5-Dec-1996	5-Dec-2014	N	8	(pp),hh,mm,uu,eee	N	Ames 2000B 1/2" (VU), Watts 007QT 1/2" (VU)
DCDA	Ames	3000CIV	10	H	27-Jul-1987	27-Jul-2014	N	6	(pp),hh,mm,uu,eee	N	Ames 2000B 1/2"(H),Watts 007QT 1/2"(H)
DCDA	Ames	3000CIV	10	VU	5-Dec-1996	5-Dec-2014	N	8	(pp),hh,mm,uu,eee	N	Ames 2000B 1/2" (VU), Watts 007QT 1/2" (VU)
DCDA	Ames	3000DCDA	4	H	11-Jan-1988	11-Jan-2015	N	7	uu,ee,ff,gg,hh,mm,oo,pp,ccc,ddd,ffff,gggg	Y	Watts 007QT 3/4" (H)
DCDA	Ames	3000DCDA	6	H	11-Jan-1988	11-Jan-2015	N	7	uu,ee,ff,gg,hh,mm,oo,pp,ccc,ddd,ffff,gggg	Y	Watts 709QT 3/4" (H)
DCDA	Ames	3000DCDA	8	H	11-Jan-1988	11-Jan-2015	N	7	uu,ee,ff,gg,hh,mm,oo,pp,ccc,ddd,ffff,gggg	Y	Watts 007QT 3/4" (H)
DCDA	Ames	3000DCDC	10	H	4-Aug-1987	4-Aug-2014	N	7	(uu),ee,ff,gg,hh,oo,pp,ccc,ddd,ffff,gggg	N	Watts007M2QT 3/4" (H),Watts 709QT 3/4" (H), Ames 2000B 3/4" (H)
DCDA	Ames	3000GDCDA	4	H	11-Jan-1988	11-Jan-2015	N	7	uu,ee,ff,gg,hh,mm,oo,pp,ccc,ddd,ffff,gggg	Y	Watts 007QT 3/4" (H)
DCDA	Ames	3000GDCDA	6	H	11-Jan-1988	11-Jan-2015	N	7	uu,ee,ff,gg,hh,mm,oo,pp,ccc,ddd,ffff,gggg	Y	Watts 709QT 3/4" (H)
DCDA	Ames	3000GDCDA	8	H	11-Jan-1988	11-Jan-2015	N	7	uu,ee,ff,gg,hh,mm,oo,pp,ccc,ddd,ffff,gggg	Y	Watts 007QT 3/4" (H)
DCDA	Ames	3000GDCDC	10	H	4-Aug-1987	4-Aug-2014	N	7	uu,ee,ff,gg,hh,oo,pp,ccc,ddd,ffff,gggg	Y	Watts 709QT 3/4" (H)
DCDA	Ames	3000SE	2 1/2	H	10-Sep-1996	10-Sep-2014	N	8	(mm),ee,ff,gg,hh,ll,oo,pp,tt,uu,ccc,ddd,ffff,gggg	N	Watts007M2QT 3/4" (H), Ames 2000B 3/4" (H)
DCDA	Ames	3000SE	6	H	24-May-1995	24-May-2013	N	8	uu,ee,ff,gg,hh,ll,mm,oo,pp,tt,ccc,ddd,ffff,gggg	Y	Watts007M2QT 3/4" (H), Ames 2000B 3/4" (H)
DCDA	Ames	3000SE	8	H	9-Sep-1992	9-Sep-2013	N	8	uu,ee,ff,gg,hh,ll,mm,oo,pp,tt,ccc,ddd,ffff,gggg	Y	Watts 007M1QT 3/4" (H)
DCDA	Ames	3000SEA	8	H	5-May-1995	5-May-2013	N	8	uu,ee,ff,gg,hh,ll,mm,oo,pp,tt,ccc,ddd,ffff,gggg	Y	Ames 2000SS 3/4" (H)
DCDA	Ames	3000SEWM1	6	H	22-Nov-1993	22-Nov-2014	N	8	(uu),ee,ff,gg,hh,ll,mm,oo,pp,tt,ccc,ddd,ffff,gggg	N	Watts 007M1QT 3/4" (H)
DCDA	Ames	3000SS	2 1/2	H	24-May-1995	24-May-2013	N	8	(uu),ee,ff,gg,hh,ll,mm,oo,pp,tt,ccc,ddd,ffff,gggg	N	Watts007M2QT 3/4" (H), Ames 2000B 3/4" (H)
DCDA	Ames	3000SS	2 1/2								

Type	Manufacturer	Model	Size	Orientation(s)	Approved	Renewed	≤0.25% Pb	Manual	Shutoffs	Spare Parts	Bypass
DCDA	Ames	3000SS	3	H	24-May-1995	24-May-2013	N	8	(uu),ee,ff,gg,hh,ll,mm,oo,pp,tt,ccc,ddd,ffff,gggg	N	Watts007M2QT 3/4" (H), Ames 2000B 3/4" (H)
DCDA	Ames	3000SS	3								
DCDA	Ames	3000SS	4	H	24-May-1995	24-May-2013	N	8	(uu),ee,ff,gg,hh,ll,mm,oo,pp,tt,ccc,ddd,ffff,gggg	N	Watts007M2QT 3/4" (H), Ames 2000B 3/4" (H)
DCDA	Ames	3000SS	4								
DCDA	Ames	3000SS	6	H	9-Sep-1992	9-Sep-2013	N	8	(uu),ee,ff,gg,hh,ll,mm,oo,pp,tt,ccc,ddd,ffff,gggg	N	Watts 007M1QT 3/4" (H)
DCDA	Ames	3000SS	6								
DCDA	Ames	3000SS	8	H	16-Sep-1996	16-Sep-2014	N	8	(uu),ee,ff,gg,hh,ll,mm,tt,ccc,ddd,ffff,gggg	N	Watts007M2QT 3/4" (H), Ames 2000B 3/4" (H)
DCDA	Ames	3000SS	10	H	16-Feb-2001	16-Feb-2016	N	8	(ll),mm,oo,pp,ffff,gggg	N	Ames 2000B 3/4" (H)
DCDA	Ames	3000SS	12	H	4-Dec-2009	4-Dec-2015	N	9	(mm), ll	N	Ames 2000BM3 3/4" (H)
DCDA	Ames	3000SS	12	VU	22-Feb-2011	22-Feb-2014	N	9	(mm), ll	N	Ames 2000BM3 3/4" (VU)
DCDA	Ames	3000SSA	6	H	5-May-1995	5-May-2013	N	8	uu,ee,ff,gg,hh,ll,mm,oo,pp,tt,ccc,ddd,ffff,gggg	Y	Ames 2000SS 3/4" (H)
DCDA	Ames	3000SSM	4	H	5-May-1995	5-May-2013	N	8	uu,ee,ff,gg,hh,ll,mm,oo,pp,tt,ccc,ddd,ffff,gggg	Y	Ames 2000SS 1" (H)
DCDA	Ames	3000SSM	6	H	5-May-1995	5-May-2013	N	8	(uu),ee,ff,gg,hh,ll,mm,oo,pp,tt,ccc,ddd,ffff,gggg	N	Watts 007M2QT 1 1/2" (H)
DCDA	Ames	3000SSWM1	2 1/2	H	11-Jul-1991	11-Jul-2015	N	8	(uu),ee,ff,gg,hh,ll,mm,oo,pp,tt,ccc,ddd,ffff,gggg	N	Watts 007M1QT 3/4" (H)
DCDA	Ames	3000SSWM1	3	H	11-Jul-1991	11-Jul-2015	N	8	(uu),ee,ff,gg,hh,ll,mm,oo,pp,tt,ccc,ddd,ffff,gggg	N	Watts 007M1QT 3/4" (H)
DCDA	Ames	3000SSWM1	4	H	11-Jul-1991	11-Jul-2015	N	8	(uu),ee,ff,gg,hh,ll,mm,oo,pp,tt,ccc,ddd,ffff,gggg	N	Watts 007M1QT 3/4" (H)
DCDA	Ames	Colt 300aBF	2 1/2	H	6-Nov-2003	6-Nov-2015	N	9	(yyy)	N	Ames 2000BM3 3/4" (H)
DCDA	Ames	Colt 300aBF	2 1/2	VU	6-Nov-2003	6-Nov-2015	N	9	(yyy)	N	Ames 2000BM3 3/4" (VU)
DCDA	Ames	Colt 300aBF	3	H	6-Nov-2003	6-Nov-2015	N	9	(yyy)	N	Ames 2000BM3 3/4" (H)
DCDA	Ames	Colt 300aBF	3	VU	6-Nov-2003	6-Nov-2015	N	9	(yyy)	N	Ames 2000BM3 3/4" (VU)
DCDA	Ames	Colt 300aBF	4	H	6-Nov-2003	6-Nov-2015	N	9	(yyy)	N	Ames 2000BM3 3/4" (H)
DCDA	Ames	Colt 300aBF	4	VU	6-Nov-2003	6-Nov-2015	N	9	(yyy)	N	Ames 2000BM3 3/4" (VU)
DCDA	Ames	Colt 300aBF	6	H	29-Sep-2004	29-Sep-2013	N	9	(yyy)	N	Ames 2000BM3 3/4" (H)
DCDA	Ames	Colt 300aBF	6	VU	18-Jan-2005	18-Jan-2014	N	9	(yyy)	N	Ames 2000BM3 3/4" (VU)
DCDA	Ames	Colt 300aGV	2 1/2	H	6-Oct-2003	6-Oct-2015	N	9	(zzz)	N	Ames 2000BM3 3/4" (H)
DCDA	Ames	Colt 300aGV	2 1/2	VU	6-Oct-2003	6-Oct-2015	N	9	(zzz)	N	Ames 2000BM3 3/4" (VU)
DCDA	Ames	Colt 300aGV	3	H	6-Oct-2003	6-Oct-2015	N	9	(zzz)	N	Ames 2000BM3 3/4" (H)
DCDA	Ames	Colt 300aGV	3	VU	6-Oct-2003	6-Oct-2015	N	9	(zzz)	N	Ames 2000BM3 3/4" (VU)
DCDA	Ames	Colt 300aGV	4	H	6-Oct-2003	6-Oct-2015	N	9	(zzz)	N	Ames 2000BM3 3/4" (H)
DCDA	Ames	Colt 300aGV	4	VU	6-Oct-2003	6-Oct-2015	N	9	(zzz)	N	Ames 2000BM3 3/4" (VU)
DCDA	Ames	Colt 300aGV	6	H	3-Nov-2004	3-Nov-2013	N	9	(zzz)	N	Ames 2000BM3 3/4 (H)
DCDA	Ames	Colt 300aGV	6	VU	18-Jan-2005	18-Jan-2014	N	9	(zzz)	N	Ames 2000BM3 3/4" (VU)
DCDA	Ames	Colt 300BF	2 1/2	H	4-Oct-2005	4-Oct-2014	N	9	(yyy)	N	Ames 2000BM3 3/4" (H)
DCDA	Ames	Colt 300BF	2 1/2	VU	4-Oct-2005	4-Oct-2014	N	9	(yyy)	N	Ames 2000BM3 3/4" (VU)
DCDA	Ames	Colt 300BF	3	H	4-Oct-2005	4-Oct-2014	N	9	(yyy)	N	Ames 2000BM3 3/4" (H)
DCDA	Ames	Colt 300BF	3	VU	4-Oct-2005	4-Oct-2014	N	9	(yyy)	N	Ames 2000BM3 3/4" (VU)
DCDA	Ames	Colt 300BF	4	H	4-Oct-2005	4-Oct-2014	N	9	(yyy)	N	Ames 2000BM3 3/4" (H)
DCDA	Ames	Colt 300BF	4	VU	4-Oct-2005	4-Oct-2014	N	9	(yyy)	N	Ames 2000BM3 3/4" (VU)
DCDA	Ames	Colt 300BF	6	H	2-Mar-2007	2-Mar-2016	N	9	(yyy)	N	Ames 2000BM3 3/4"(H)
DCDA	Ames	Colt 300BF	6	VU	2-Mar-2007	2-Mar-2016	N	9	(yyy)	N	Ames 2000BM3 3/4"(V)
DCDA	Ames	Colt 300BF	8	H	9-Mar-2007	9-Mar-2016	N	9	(yyy)	N	Ames 2000BM3 3/4" (H & VU)
DCDA	Ames	Colt 300BF	8	VU	9-Mar-2007	9-Mar-2016	N	9	(yyy)	N	Ames 2000BM3 3/4" (H & VU)
DCDA	Ames	Colt 300BF	10	H	17-Sep-2009	17-Sep-2015	N	9	(yyy)	N	Watts 007M3QT 3/4" (H), Ames 2000 BM3 (H)
DCDA	Ames	Colt 300BF	10	VU	17-Sep-2009	17-Sep-2015	N	9	(yyy)	N	Watts 007M3QT 3/4" (V), Ames 2000 BM3 (V)
DCDA	Ames	Colt 300GV	2 1/2	H	4-Oct-2005	4-Oct-2014	N	9	(zzz)	N	Ames 2000BM3 3/4" (H)
DCDA	Ames	Colt 300GV	2 1/2	VU	4-Oct-2005	4-Oct-2014	N	9	(zzz)	N	Ames 2000BM3 3/4" (VU)
DCDA	Ames	Colt 300GV	3	H	4-Oct-2005	4-Oct-2014	N	9	(zzz)	N	Ames 2000BM3 3/4" (H)
DCDA	Ames	Colt 300GV	3	VU	4-Oct-2005	4-Oct-2014	N	9	(zzz)	N	Ames 2000BM3 3/4" (VU)
DCDA	Ames	Colt 300GV	4	H	4-Oct-2005	4-Oct-2014	N	9	(zzz)	N	Ames 2000BM3 3/4" (H)
DCDA	Ames	Colt 300GV	4	VU	4-Oct-2005	4-Oct-2014	N	9	(zzz)	N	Ames 2000BM3 3/4" (VU)
DCDA	Ames	Colt 300GV	6	H	2-Mar-2007	2-Mar-2016	N	9	(zzz)	N	Ames 2000BM3 3/4"(H)
DCDA	Ames	Colt 300GV	6	VU	2-Mar-2007	2-Mar-2016	N	9	(zzz)	N	Ames 2000BM3 3/4"(V)
DCDA	Ames	Colt 300GV	8	H	9-Mar-2007	9-Mar-2016	N	9	(zzz)	N	Ames 2000BM3 3/4" (H & VU)
DCDA	Ames	Colt 300GV	8	VU	9-Mar-2007	9-Mar-2016	N	9	(zzz)	N	Ames 2000BM3 3/4" (H & VU)
DCDA	Ames	Colt 300GV	10	H	17-Sep-2009	17-Sep-2015	N	9	(zzz)	N	Watts 007M3QT 3/4" (H), Ames 2000 BM3 (H)
DCDA	Ames	Colt 300GV	10	VU	17-Sep-2009	17-Sep-2015	N	9	(zzz)	N	Watts 007M3QT 3/4" (V), Ames 2000 BM3 (V)
DCDA	Ames	Colt 300NBF	2 1/2	VUVD	7-Apr-2009	7-Apr-2015	N	9	(yyy)	N	Ames 2000BM3 3/4" (H)
DCDA	Ames	Colt 300NBF	3	VUVD	7-Apr-2009	7-Apr-2015	N	9	(yyy)	N	Ames 2000BM3 3/4" (H)
DCDA	Ames	Colt 300NBF	4	VUVD	7-Apr-2009	7-Apr-2015	N	9	(yyy)	N	Ames 2000BM3 3/4" (H)
DCDA	Ames	Colt 300NBF	6	VUVD	7-Apr-2009	7-Apr-2015	N	9	(yyy)	N	Ames 2000BM3 3/4" (H)
DCDA	Ames	Colt 300NBF	8	VUVD	3-Jan-2013	3-Jan-2016	N	9	(yyy)	N	Ames 2000BM3 3/4" (H)
DCDA	Ames	Colt 300NBF	10	VUVD	28-May-2013		N	9	(yyy)	N	Ames 2000BM3 3/4" (H), Watts 007M3QT 3/4" (H)
DCDA	Ames	Colt 300NGV	2 1/2	VUVD	7-Apr-2009	7-Apr-2015	N	9	(zzz)	N	Ames 2000BM3 3/4" (H)
DCDA	Ames	Colt 300NGV	3	VUVD	7-Apr-2009	7-Apr-2015	N	9	(zzz)	N	Ames 2000BM3 3/4" (H)
DCDA	Ames	Colt 300NGV	4	VUVD	7-Apr-2009	7-Apr-2015	N	9	(zzz)	N	Ames 2000BM3 3/4" (H)
DCDA	Ames	Colt 300NGV	6	VUVD	7-Apr-2009	7-Apr-2015	N	9	(zzz)	N	Ames 2000BM3 3/4" (H)
DCDA	Ames	Colt 300NGV	8	VUVD	3-Jan-2013	3-Jan-2016	N	9	(zzz)	N	Ames 2000BM3 3/4" (H)
DCDA	Ames	Colt 300NGV	10	VUVD	28-May-2013		N	9	(zzz)	N	Ames 2000BM3 3/4" (H), Watts 007M3QT 3/4" (H)
DCDA	Ames	DCDA	4								
DCDA	Ames	DCDA	4								
DCDA	Ames	DCDA	8								
DCDA	Ames	DCDA	8								
DCDA	Ames	DCDA	10								
DCDA	Ames	DCDA-I	6								
DCDA	Ames	DCDA-I	6								
DCDA	Ames	DCDC	4	H	14-Jun-1985	14-Jun-2015	N	6	ee,ff,gg,hh,oo,pp,ccc,ddd,ffff,gggg	Y	Watts 709QT 3/4" (H)
DCDA	Ames	DCDC	6	H	14-Jun-1985	14-Jun-2015	N	6	ee,ff,gg,hh,oo,pp,ccc,ddd,ffff,gggg	Y	Watts 709QT 3/4" (H)
DCDA	Ames	DCDC	8	H	4-Aug-1987	4-Aug-2014	N	7	ee,ff,gg,hh,oo,pp,ccc,ddd,ffff,gggg	Y	Watts 709QT 3/4" (H)
DCDA	Ames	DCDC	10								
DCDA	Ames	LFColt 300BF	2 1/2	H	8-Jan-2014		Y	9	(yyy)	N	Watts LF007M3QT 3/4" (H), Ames LF2000BM3 3/4" (H)
DCDA	Ames	LFColt 300BF	2 1/2	VU	8-Jan-2014		Y	9	(yyy)	N	Watts LF007M3QT 3/4" (VU), Ames LF2000BM3 3/4" (VU)
DCDA	Ames	LFColt 300BF	3	H	8-Jan-2014		Y	9	(yyy)	N	Watts LF007M3QT 3/4" (H), Ames LF2000BM3 3/4" (H)
DCDA	Ames	LFColt 300BF	3	VU	8-Jan-2014		Y	9	(yyy)	N	Watts LF007M3QT 3/4" (VU), Ames LF2000BM3 3/4" (VU)
DCDA	Ames	LFColt 300BF	4	H	8-Jan-2014		Y	9	(yyy)	N	Watts LF007M3QT 3/4" (H), Ames LF2000BM3 3/4" (H)
DCDA	Ames	LFColt 300BF	4	VU	8-Jan-2014		Y	9	(yyy)	N	Watts LF007M3QT 3/4" (VU), Ames LF2000BM3 3/4" (VU)
DCDA	Ames	LFColt 300BF	6	H	8-Jan-2014		Y	9	(yyy)	N	Watts LF007M3QT 3/4" (H), Ames LF2000BM3 3/4" (H)
DCDA	Ames	LFColt 300BF	6	VU	8-Jan-2014		Y	9	(yyy)	N	Watts LF007M3QT 3/4" (VU), Ames LF2000BM3 3/4" (VU)
DCDA	Ames	LFColt 300BF	8	H	8-Jan-2014		Y	9	(yyy)	N	Watts LF007M3QT 3/4" (H), Ames LF2000BM3 3/4" (H)
DCDA	Ames	LFColt 300BF	8	VU	8-Jan-2014		Y	9	(yyy)	N	Watts LF007M3QT 3/4" (VU), Ames LF2000BM3 3/4" (VU)
DCDA	Ames	LFColt 300BF	10	H	8-Jan-2014		Y	9	(yyy)	N	Watts LF007M3QT 3/4" (H), Ames LF2000BM3 3/4" (H)
DCDA	Ames	LFColt 300BF	10	VU	8-Jan-2014		Y	9	(yyy)	N	Watts LF007M3QT 3/4" (VU), Ames LF2000BM3 3/4" (VU)
DCDA	Ames	LFColt 300GV	2 1/2	H	8-Jan-2014		Y	9	(zzz)	N	Watts LF007M3QT 3/4" (H), Ames LF2000BM3 3/4" (H)
DCDA	Ames	LFColt 300GV	2 1/2	VU	8-Jan-2014		Y	9	(zzz)	N	Watts LF007M3QT 3/4" (VU), Ames LF2000BM3 3/4" (VU)
DCDA	Ames	LFColt 300GV	3	H	8-Jan-2014		Y	9	(zzz)	N	Watts LF007M3QT 3/4" (H), Ames LF2000BM3 3/4" (H)
DCDA	Ames	LFColt 300GV	3	VU	8-Jan-2014		Y	9	(zzz)	N	Watts LF007M3QT 3/4" (VU), Ames LF2000BM3 3/4" (VU)
DCDA	Ames	LFColt 300GV	4	H	8-Jan-2014		Y	9	(zzz)	N	Watts LF007M3QT 3/4" (H), Ames LF2000BM3 3/4" (H)
DCDA	Ames	LFColt 300GV	4	VU	8-Jan-2014		Y	9	(zzz)	N	Watts LF007M3QT 3/4" (VU), Ames LF2000BM3 3/4" (VU)
DCDA	Ames	LFColt 300GV	6	H	8-Jan-2014		Y	9	(zzz)	N	Watts LF007M3QT 3/4" (H), Ames LF2000BM3 3/4" (H)
DCDA	Ames	LFColt 300GV	6	VU	8-Jan-2014		Y	9	(zzz)	N	Watts LF007M3QT 3/4" (VU), Ames LF2000BM3 3/4" (VU)
DCDA	Ames	LFColt 300GV	8	H	8-Jan-2014		Y	9	(zzz)	N	Watts LF007M3QT 3/4" (H), Ames LF2000BM3 3/4" (H)
DCDA	Ames	LFColt 300GV	8	VU	8-Jan-2014		Y	9	(zzz)	N	Watts LF007M3QT 3/4" (VU), Ames LF2000BM3 3/4" (VU)
DCDA	Ames	LFColt 300GV	10	H	8-Jan-2014		Y	9	(zzz)	N	Watts LF007M3QT 3/4" (H), Ames LF2000BM3 3/4" (H)
DCDA	Ames	LFColt 300GV	10	VU	8-Jan-2014		Y	9	(zzz)	N	Watts LF007M3QT 3/4" (VU), Ames LF2000BM3 3/4" (VU)
DCDA	Ames	LFColt 300NBF	2 1/2	VUVD	8-Jan-2014		Y	9	(yyy)	N	Watts LF007M3QT 3/4" (H), Ames LF2000BM3 3/4" (H)
DCDA	Ames	LFColt 300NBF	3	VUVD	8-Jan-2014		Y	9	(yyy)	N	Watts LF007M3QT 3/4" (H), Ames LF2000BM3 3/4" (H)
DCDA	Ames	LFColt 300NBF	4	VUVD	8-Jan-2014		Y	9	(yyy)	N	Watts LF007M3QT 3/4" (H), Ames LF2000BM3 3/4" (H)
DCDA	Ames	LFColt 300NBF	6	VUVD	8-Jan-2014		Y	9	(yyy)	N	Watts LF007M3QT 3/4" (H), Ames LF2000BM3 3/4" (H)
DCDA	Ames	LFColt 300NBF	8	VUVD	8-Jan-2014		Y	9	(yyy)	N	Watts LF007M3QT 3/4" (H), Ames LF2000BM3 3/4" (H)
DCDA	Ames	LFColt 300NBF	10	VUVD	8-Jan-2014		Y	9	(yyy)	N	Watts LF007M3QT 3/4" (H), Ames LF2000BM3 3/4" (H)
DCDA	Ames	LFColt 300NGV	2 1/2	VUVD	8-Jan-2014		Y	9	(zzz)	N	Watts LF007M3QT 3/4" (H), Ames LF2000BM3 3/4" (H)
DCDA	Ames	LFColt 300NGV	3	VUVD	8-Jan-2014		Y	9	(zzz)	N	Watts LF007M3QT 3/4" (H), Ames LF2000BM3 3/4" (H)
DCDA	Ames	LFColt 300NGV	4	VUVD	8-Jan-2014		Y	9	(zzz)	N	Watts LF007M3QT 3/4" (H), Ames LF2000BM3 3/4" (H)
DCDA	Ames	LFColt 300NGV	6	VUVD	8-Jan-2014		Y	9	(zzz)	N	Watts LF007M3QT 3/4" (H), Ames LF2000BM3 3/4" (H)
DCDA	Ames	LFColt 300NGV	8	VUVD	8-Jan-2014		Y	9	(zzz)	N	Watts LF007M3QT 3/4" (H), Ames LF2000BM3 3/4" (H)
DCDA	Ames	LFColt 300NGV	10	VUVD	8-Jan-2014		Y	9	(zzz)	N	Watts LF007M3QT 3/4" (H), Ames LF2000BM3 3/4" (H)
DCDA	Ames	LFMaxim 300BF	2 1/2	H	8-Jan-2014		Y	9	(yyy)	N	Watts LF007M3QT 3/4" (H), Ames LF2000BM3 3/4" (H)
DCDA	Ames	LFMaxim 300BF	2 1/2	VU	8-Jan-2014		Y	9	(yyy)	N	Watts LF007M3QT 3/4" (VU), Ames LF2000BM3 3/4" (VU)
DCDA	Ames	LFMaxim 300BF	3	H	8-Jan-2014		Y	9	(yyy)	N	Watts LF007M3QT 3/4" (H), Ames LF2000BM3 3/4" (H)
DCDA	Ames	LFMaxim 300BF	3	VU	8-Jan-2014		Y	9	(yyy)	N	Watts LF007M3QT 3/4" (VU), Ames LF2000BM3 3/4" (VU)
DCDA	Ames	LFMaxim 300BF	4	H	8-Jan-2014		Y	9	(yyy)	N	Watts LF007M3QT 3/4" (H), Ames LF2000BM3 3/4" (H)
DCDA	Ames	LFMaxim 300BF	4	VU	8-Jan-2014		Y	9	(yyy)	N	Watts LF007M3QT 3/4" (VU), Ames LF2000BM3 3/4" (VU)
DCDA	Ames	LFMaxim 300BF	6	H	8-Jan-2014		Y	9	(yyy)	N	Watts LF007M3QT 3/4" (H), Ames LF2000BM3 3/4" (H)
DCDA	Ames	LFMaxim 300BF	6	VU	8-Jan-2014		Y	9	(yyy)	N	Watts LF007M3QT 3/4" (VU), Ames LF2000BM3 3/4" (VU)
DCDA	Ames	LFMaxim 300BF	8	H	8-Jan-2014		Y	9	(yyy)	N	Watts LF007M3QT 3/4" (H), Ames LF2000BM3 3/4" (H)
DCDA	Ames	LFMaxim 300BF	8	VU	8-Jan-2014		Y	9	(yyy)	N	Watts LF007M3QT 3/4" (VU), Ames LF2000BM3 3/4" (VU)

Type	Manufacturer	Model	Size	Orientation(s)	Approved	Renewed	≤0.25% Pb	Manual	Shutoffs	Spare Parts	Bypass
DCDA	Ames	LFMaxim 300BF	10	H	8-Jan-2014		Y	9	(yyy)	N	Watts LF007M3QT 3/4" (H), Ames LF2000BM3 3/4" (H)
DCDA	Ames	LFMaxim 300BF	10	VU	8-Jan-2014		Y	9	(yyy)	N	Watts LF007M3QT 3/4" (VU), Ames LF2000BM3 3/4" (VU)
DCDA	Ames	LFMaxim 300GV	2 1/2	H	8-Jan-2014		Y	9	(zzz)	N	Watts LF007M3QT 3/4" (H), Ames LF2000BM3 3/4" (H)
DCDA	Ames	LFMaxim 300GV	2 1/2	VU	8-Jan-2014		Y	9	(zzz)	N	Watts LF007M3QT 3/4" (VU), Ames LF2000BM3 3/4" (VU)
DCDA	Ames	LFMaxim 300GV	3	H	8-Jan-2014		Y	9	(zzz)	N	Watts LF007M3QT 3/4" (H), Ames LF2000BM3 3/4" (H)
DCDA	Ames	LFMaxim 300GV	3	VU	8-Jan-2014		Y	9	(zzz)	N	Watts LF007M3QT 3/4" (VU), Ames LF2000BM3 3/4" (VU)
DCDA	Ames	LFMaxim 300GV	4	H	8-Jan-2014		Y	9	(zzz)	N	Watts LF007M3QT 3/4" (H), Ames LF2000BM3 3/4" (H)
DCDA	Ames	LFMaxim 300GV	4	VU	8-Jan-2014		Y	9	(zzz)	N	Watts LF007M3QT 3/4" (VU), Ames LF2000BM3 3/4" (VU)
DCDA	Ames	LFMaxim 300GV	6	H	8-Jan-2014		Y	9	(zzz)	N	Watts LF007M3QT 3/4" (H), Ames LF2000BM3 3/4" (H)
DCDA	Ames	LFMaxim 300GV	6	VU	8-Jan-2014		Y	9	(zzz)	N	Watts LF007M3QT 3/4" (VU), Ames LF2000BM3 3/4" (VU)
DCDA	Ames	LFMaxim 300GV	8	H	8-Jan-2014		Y	9	(zzz)	N	Watts LF007M3QT 3/4" (H), Ames LF2000BM3 3/4" (H)
DCDA	Ames	LFMaxim 300GV	8	VU	8-Jan-2014		Y	9	(zzz)	N	Watts LF007M3QT 3/4" (VU), Ames LF2000BM3 3/4" (VU)
DCDA	Ames	LFMaxim 300GV	10	H	8-Jan-2014		Y	9	(zzz)	N	Watts LF007M3QT 3/4" (H), Ames LF2000BM3 3/4" (H)
DCDA	Ames	LFMaxim 300GV	10	VU	8-Jan-2014		Y	9	(zzz)	N	Watts LF007M3QT 3/4" (VU), Ames LF2000BM3 3/4" (VU)
DCDA	Ames	LFMaxim 300NBF	2 1/2	VUVD	8-Jan-2014		Y	9	(yyy)	N	Watts LF007M3QT 3/4" (H), Ames LF2000BM3 3/4" (H)
DCDA	Ames	LFMaxim 300NBF	3	VUVD	8-Jan-2014		Y	9	(yyy)	N	Watts LF007M3QT 3/4" (H), Ames LF2000BM3 3/4" (H)
DCDA	Ames	LFMaxim 300NBF	4	VUVD	8-Jan-2014		Y	9	(yyy)	N	Watts LF007M3QT 3/4" (H), Ames LF2000BM3 3/4" (H)
DCDA	Ames	LFMaxim 300NBF	6	VUVD	8-Jan-2014		Y	9	(yyy)	N	Watts LF007M3QT 3/4" (H), Ames LF2000BM3 3/4" (H)
DCDA	Ames	LFMaxim 300NBF	8	VUVD	8-Jan-2014		Y	9	(yyy)	N	Watts LF007M3QT 3/4" (H), Ames LF2000BM3 3/4" (H)
DCDA	Ames	LFMaxim 300NBF	10	VUVD	8-Jan-2014		Y	9	(yyy)	N	Watts LF007M3QT 3/4" (H), Ames LF2000BM3 3/4" (H)
DCDA	Ames	LFMaxim 300NGV	2 1/2	VUVD	8-Jan-2014		Y	9	(zzz)	N	Watts LF007M3QT 3/4" (H), Ames LF2000BM3 3/4" (H)
DCDA	Ames	LFMaxim 300NGV	3	VUVD	8-Jan-2014		Y	9	(zzz)	N	Watts LF007M3QT 3/4" (H), Ames LF2000BM3 3/4" (H)
DCDA	Ames	LFMaxim 300NGV	4	VUVD	8-Jan-2014		Y	9	(zzz)	N	Watts LF007M3QT 3/4" (H), Ames LF2000BM3 3/4" (H)
DCDA	Ames	LFMaxim 300NGV	6	VUVD	8-Jan-2014		Y	9	(zzz)	N	Watts LF007M3QT 3/4" (H), Ames LF2000BM3 3/4" (H)
DCDA	Ames	LFMaxim 300NGV	8	VUVD	8-Jan-2014		Y	9	(zzz)	N	Watts LF007M3QT 3/4" (H), Ames LF2000BM3 3/4" (H)
DCDA	Ames	LFMaxim 300NGV	10	VUVD	8-Jan-2014		Y	9	(zzz)	N	Watts LF007M3QT 3/4" (H), Ames LF2000BM3 3/4" (H)
DCDA	Ames	Maxim 300aBF	2 1/2	H	6-Nov-2003	6-Nov-2015	N	9	(yyy)	N	Ames 2000BM3 3/4" (H)
DCDA	Ames	Maxim 300aBF	2 1/2	VU	6-Nov-2003	6-Nov-2015	N	9	(yyy)	N	Ames 2000BM3 3/4" (VU)
DCDA	Ames	Maxim 300aBF	3	H	6-Oct-2003	6-Oct-2015	N	9	(yyy)	N	Ames 2000BM3 3/4" (H)
DCDA	Ames	Maxim 300aBF	3	VU	6-Oct-2003	6-Oct-2015	N	9	(yyy)	N	Ames 2000BM3 3/4" (VU)
DCDA	Ames	Maxim 300aBF	4	H	3-Nov-2004	3-Nov-2013	N	9	(yyy)	N	Ames 2000BM3 3/4 (H)
DCDA	Ames	Maxim 300aBF	4	VU	18-Jan-2005	18-Jan-2014	N	9	(yyy)	N	Ames 2000BM3 3/4" (VU)
DCDA	Ames	Maxim 300aGV	2 1/2	H	6-Oct-2003	6-Oct-2015	N	9	(zzz)	N	Ames 2000BM3 3/4" (H)
DCDA	Ames	Maxim 300aGV	2 1/2	VU	6-Oct-2003	6-Oct-2015	N	9	(zzz)	N	Ames 2000BM3 3/4" (VU)
DCDA	Ames	Maxim 300aGV	3	H	6-Oct-2003	6-Oct-2015	N	9	(zzz)	N	Ames 2000BM3 3/4" (H)
DCDA	Ames	Maxim 300aGV	3	VU	6-Oct-2003	6-Oct-2015	N	9	(zzz)	N	Ames 2000BM3 3/4" (VU)
DCDA	Ames	Maxim 300aGV	4	H	3-Nov-2004	3-Nov-2013	N	9	(zzz)	N	Ames 2000BM3 3/4 (H)
DCDA	Ames	Maxim 300aGV	4	VU	18-Jan-2005	18-Jan-2014	N	9	(zzz)	N	Ames 2000BM3 3/4" (VU)
DCDA	Ames	Maxim 300BF	2 1/2	H	4-Oct-2005	4-Oct-2014	N	9	(yyy)	N	Ames 2000BM3 3/4" (H)
DCDA	Ames	Maxim 300BF	2 1/2	VU	4-Oct-2005	4-Oct-2014	N	9	(yyy)	N	Ames 2000BM3 3/4" (VU)
DCDA	Ames	Maxim 300BF	3	H	4-Oct-2005	4-Oct-2014	N	9	(yyy)	N	Ames 2000BM3 3/4" (H)
DCDA	Ames	Maxim 300BF	3	VU	4-Oct-2005	4-Oct-2014	N	9	(yyy)	N	Ames 2000BM3 3/4" (VU)
DCDA	Ames	Maxim 300BF	4	H	2-Mar-2007	2-Mar-2016	N	9	(yyy)	N	Ames 2000BM3 3/4"(H)
DCDA	Ames	Maxim 300BF	4	Vu	2-Mar-2007	2-Mar-2016	N	9	(yyy)	N	Ames 2000BM3 3/4"(V)
DCDA	Ames	Maxim 300BF	6	H	9-Mar-2007	9-Mar-2016	N	9	(yyy)	N	Ames 2000BM3 3/4" (H & VU)
DCDA	Ames	Maxim 300BF	6	VU	9-Mar-2007	9-Mar-2016	N	9	(yyy)	N	Ames 2000BM3 3/4" (H & VU)
DCDA	Ames	Maxim 300BF	8	H	17-Sep-2009	17-Sep-2015	N	9	(yyy)	N	Watts 007M3QT 3/4" (H), Ames 2000 BM3 (H)
DCDA	Ames	Maxim 300BF	8	VU	17-Sep-2009	17-Sep-2015	N	9	(yyy)	N	Watts 007M3QT 3/4" (V), Ames 2000 BM3 (V)
DCDA	Ames	Maxim 300BF	10	H	17-Sep-2009	17-Sep-2015	N	9	(yyy)	N	Watts 007M3QT 3/4" (H), Ames 2000 BM3 (H)
DCDA	Ames	Maxim 300BF	10	VU	17-Sep-2009	17-Sep-2015	N	9	(yyy)	N	Watts 007M3QT 3/4" (V), Ames 2000 BM3 (V)
DCDA	Ames	Maxim 300GV	2 1/2	H	4-Oct-2005	4-Oct-2014	N	9	(zzz)	N	Ames 2000BM3 3/4" (H)
DCDA	Ames	Maxim 300GV	2 1/2	VU	4-Oct-2005	4-Oct-2014	N	9	(zzz)	N	Ames 2000BM3 3/4" (VU)
DCDA	Ames	Maxim 300GV	3	H	4-Oct-2005	4-Oct-2014	N	9	(zzz)	N	Ames 2000BM3 3/4" (H)
DCDA	Ames	Maxim 300GV	3	VU	4-Oct-2005	4-Oct-2014	N	9	(zzz)	N	Ames 2000BM3 3/4" (VU)
DCDA	Ames	Maxim 300GV	4	H	2-Mar-2007	2-Mar-2016	N	9	(zzz)	N	Ames 2000BM3 3/4"(H)
DCDA	Ames	Maxim 300GV	4	VU	2-Mar-2007	2-Mar-2016	N	9	(zzz)	N	Ames 2000BM3 3/4"(V)
DCDA	Ames	Maxim 300GV	6	H	9-Mar-2007	9-Mar-2016	N	9	(zzz)	N	Ames 2000BM3 3/4" (H & VU)
DCDA	Ames	Maxim 300GV	6	VU	9-Mar-2007	9-Mar-2016	N	9	(zzz)	N	Ames 2000BM3 3/4" (H & VU)
DCDA	Ames	Maxim 300GV	8	H	17-Sep-2009	17-Sep-2015	N	9	(zzz)	N	Watts 007M3QT 3/4" (H), Ames 2000 BM3 (H)
DCDA	Ames	Maxim 300GV	8	VU	17-Sep-2009	17-Sep-2015	N	9	(zzz)	N	Watts 007M3QT 3/4" (V), Ames 2000 BM3 (V)
DCDA	Ames	Maxim 300GV	10	H	17-Sep-2009	17-Sep-2015	N	9	(zzz)	N	Watts 007M3QT 3/4" (H), Ames 2000 BM3 (H)
DCDA	Ames	Maxim 300GV	10	VU	17-Sep-2009	17-Sep-2015	N	9	(zzz)	N	Watts 007M3QT 3/4" (V), Ames 2000 BM3 (V)
DCDA	Ames	Maxim 300NBF	2 1/2	VUVD	7-Apr-2009	7-Apr-2015	N	9	(yyy)	N	Ames 2000BM3 3/4" (H)
DCDA	Ames	Maxim 300NBF	3	VUVD	7-Apr-2009	7-Apr-2015	N	9	(yyy)	N	Ames 2000BM3 3/4" (H)
DCDA	Ames	Maxim 300NBF	4	VUVD	7-Apr-2009	7-Apr-2015	N	9	(yyy)	N	Ames 2000BM3 3/4" (H)
DCDA	Ames	Maxim 300NBF	6	VUVD	3-Jan-2013	3-Jan-2016	N	9	(yyy)	N	Ames 2000BM3 3/4" (H)
DCDA	Ames	Maxim 300NBF	8	VUVD	28-May-2013		N	9	(yyy)	N	Ames 2000BM3 3/4" (H), Watts 007M3QT 3/4" (H)
DCDA	Ames	Maxim 300NBF	10	VUVD	28-May-2013		N	9	(yyy)	N	Ames 2000BM3 3/4" (H), Watts 007M3QT 3/4" (H)
DCDA	Ames	Maxim 300NGV	2 1/2	VUVD	7-Apr-2009	7-Apr-2015	N	9	(zzz)	N	Ames 2000BM3 3/4" (H)
DCDA	Ames	Maxim 300NGV	3	VUVD	7-Apr-2009	7-Apr-2015	N	9	(zzz)	N	Ames 2000BM3 3/4" (H)
DCDA	Ames	Maxim 300NGV	4	VUVD	7-Apr-2009	7-Apr-2015	N	9	(zzz)	N	Ames 2000BM3 3/4" (H)
DCDA	Ames	Maxim 300NGV	6	VUVD	3-Jan-2013	3-Jan-2016	N	9	(zzz)	N	Ames 2000BM3 3/4" (H)
DCDA	Ames	Maxim 300NGV	8	VUVD	28-May-2013		N	9	(zzz)	N	Ames 2000BM3 3/4" (H), Watts 007M3QT 3/4" (H)
DCDA	Ames	Maxim 300NGV	10	VUVD	28-May-2013		N	9	(zzz)	N	Ames 2000BM3 3/4" (H), Watts 007M3QT 3/4" (H)
DCDA	Apollo/Conbraco	4060003	3								
DCDA	Apollo/Conbraco	4060003	3								
DCDA	Apollo/Conbraco	40600000	3	H	20-Aug-1996	20-Aug-2014	N	8	uu,cc,mm	Y	Apollo/Conbraco 4010402 3/4" (H)
DCDA	Apollo/Conbraco	10DCDA	10								
DCDA	Apollo/Conbraco	10DCDA	10								
DCDA	Apollo/Conbraco	2 1/2DCDA	2 1/2	H	16-Oct-2000	16-Oct-2015	N	9	(ll),mm	Y	Apollo/Conbraco 1/2DC 1/2" (H), Apollo/Conbraco W432100 1/2" (H)
DCDA	Apollo/Conbraco	2 1/2DCDA	2 1/2	VU	16-Oct-2000	16-Oct-2015	N	9	(ll),mm	Y	Apollo/Conbraco 1/2DC 1/2" (VU), Apollo/Conbraco W432100 1/2" (VU)
DCDA	Apollo/Conbraco	2 1/2DCDA6	2 1/2	H	10-Apr-2001	10-Apr-2016	N	9	(mm)[#1SOV],(nnn)[#2SOV]	Y	Apollo/Conbraco 1/2DC 1/2" (H), Apollo/Conbraco W432100 1/2" (H)
DCDA	Apollo/Conbraco	2 1/2DCDA6	2 1/2	VU	10-Apr-2001	10-Apr-2016	N	9	(mm)[#1SOV],(nnn)[#2SOV]	Y	Apollo/Conbraco 1/2DC 1/2" (VU), Apollo/Conbraco W432100 1/2" (VU)
DCDA	Apollo/Conbraco	2 1/2DCDA7	2 1/2	H	29-Sep-2004	29-Sep-2013	N	9	(mm)[#1SOV], (qqq)[#2SOV]	Y	Apollo/Conbraco 1/2DC 1/2" (H), Apollo/Conbraco W432100 1/2" (H)
DCDA	Apollo/Conbraco	2 1/2DCDA7	2 1/2	VU	29-Sep-2004	29-Sep-2013	N	9	(mm)[#1SOV], (qqq)[#2SOV]	Y	Apollo/Conbraco 1/2DC 1/2" (VU), Apollo/Conbraco W432100 1/2" (VU)
DCDA	Apollo/Conbraco	2 1/2DCDA8	2 1/2	H	29-Sep-2004	29-Sep-2013	N	9	(ppp),qqq	Y	Apollo/Conbraco 1/2DC 1/2" (H), Apollo/Conbraco W432100 1/2" (H)
DCDA	Apollo/Conbraco	2 1/2DCDA8	2 1/2	VU	29-Sep-2004	29-Sep-2013	N	9	(ppp),qqq	Y	Apollo/Conbraco 1/2DC 1/2" (VU), Apollo/Conbraco W432100 1/2" (VU)
DCDA	Apollo/Conbraco	2 1/2DCDAU	2 1/2	VUVD	10-Apr-2001	10-Apr-2016	N	9	(ll),mm	Y	Apollo/Conbraco 1/2DC 1/2" (H), Apollo/Conbraco W432100 1/2" (H)
DCDA	Apollo/Conbraco	3DCDA	3	H	16-Oct-2000	16-Oct-2015	N	9	(ll),mm	Y	Apollo/Conbraco 1/2DC 1/2" (H), Apollo/Conbraco W432100 1/2" (H)
DCDA	Apollo/Conbraco	3DCDA	3	VU	16-Oct-2000	16-Oct-2015	N	9	(ll),mm	Y	Apollo/Conbraco 1/2DC 1/2" (VU), Apollo/Conbraco W432100 1/2" (VU)
DCDA	Apollo/Conbraco	3DCDA6	3	H	10-Apr-2001	10-Apr-2016	N	9	(mm)[#1SOV],(nnn)[#2SOV]	Y	Apollo/Conbraco 1/2DC 1/2" (H), Apollo/Conbraco W432100 1/2" (H)
DCDA	Apollo/Conbraco	3DCDA6	3	VU	10-Apr-2001	10-Apr-2016	N	9	(mm)[#1SOV],(nnn)[#2SOV]	Y	Apollo/Conbraco 1/2DC 1/2" (VU), Apollo/Conbraco W432100 1/2" (VU)
DCDA	Apollo/Conbraco	3DCDA7	3	H	29-Sep-2004	29-Sep-2013	N	9	(mm)[#1SOV], (qqq)[#2SOV]	Y	Apollo/Conbraco 1/2DC 1/2" (H), Apollo/Conbraco W432100 1/2" (H)
DCDA	Apollo/Conbraco	3DCDA7	3	VU	29-Sep-2004	29-Sep-2013	N	9	(mm)[#1SOV], (qqq)[#2SOV]	Y	Apollo/Conbraco 1/2DC 1/2" (VU), Apollo/Conbraco W432100 1/2" (VU)
DCDA	Apollo/Conbraco	3DCDA8	3	H	29-Sep-2004	29-Sep-2013	N	9	(ppp),qqq	Y	Apollo/Conbraco 1/2DC 1/2" (H), Apollo/Conbraco W432100 1/2" (H)
DCDA	Apollo/Conbraco	3DCDA8	3	VU	29-Sep-2004	29-Sep-2013	N	9	(ppp),qqq	Y	Apollo/Conbraco 1/2DC 1/2" (VU), Apollo/Conbraco W432100 1/2" (VU)
DCDA	Apollo/Conbraco	3DCDAU	3	VUVD	10-Apr-2001	10-Apr-2016	N	9	(ll),mm	Y	Apollo/Conbraco 1/2DC 1/2" (H), Apollo/Conbraco W432100 1/2" (H)
DCDA	Apollo/Conbraco	40600C3	3	H	20-Aug-1996	20-Aug-2014	N	8	uu,cc,mm	Y	Apollo/Conbraco 4010402 3/4" (H)
DCDA	Apollo/Conbraco	4060A03	4								
DCDA	Apollo/Conbraco	4060A03	4								
DCDA	Apollo/Conbraco	4060AC3	4	H	13-Apr-1993	13-Apr-2014	N	8	uu,cc,mm	Y	Apollo/Conbraco 4010402 3/4" (H)
DCDA	Apollo/Conbraco	4060AC6	4	H	1-Feb-2000	1-Feb-2015	N	8	mm[#1SOV], nnn[#2SOV]	Y	Apollo/Conbraco 4010402 3/4" (H)
DCDA	Apollo/Conbraco	4060AE3	4	H	13-Apr-1993	13-Apr-2014	N	8	uu,cc,mm	Y	Apollo/Conbraco 4010402 3/4" (H)
DCDA	Apollo/Conbraco	4060AE6	4	H	1-Feb-2000	1-Feb-2015	N	8	mm[#1SOV], nnn[#2SOV]	Y	Apollo/Conbraco 4010402 3/4" (H)
DCDA	Apollo/Conbraco	4060C03	6								
DCDA	Apollo/Conbraco	4060C03	6								
DCDA	Apollo/Conbraco	4060CC3	6	H	2-Jun-1993	2-Jun-2014	N	8	uu,cc,mm	Y	Apollo/Conbraco 4010402 3/4" (H)
DCDA	Apollo/Conbraco	4060CC6	6	H	1-Feb-2000	1-Feb-2015	N	8	mm[#1SOV], nnn[#2SOV]	Y	Apollo/Conbraco 4010402 3/4" (H)
DCDA	Apollo/Conbraco	4060CE3	6	H	2-Jun-1993	2-Jun-2014	N	8	uu,cc,mm	Y	Apollo/Conbraco 4010402 3/4" (H)
DCDA	Apollo/Conbraco	4060CE6	6	H	1-Feb-2000	1-Feb-2015	N	8	mm[#1SOV], nnn[#2SOV]	Y	Apollo/Conbraco 4010402 3/4" (H)
DCDA	Apollo/Conbraco	4060E03	8								
DCDA	Apollo/Conbraco	4060E03	8								
DCDA	Apollo/Conbraco	4060EC3	8	H	13-Apr-1993	13-Apr-2014	N	8	uu,cc,mm	Y	Apollo/Conbraco 4010402 3/4" (H)
DCDA	Apollo/Conbraco	4060EC6	8	H	1-Feb-2000	1-Feb-2015	N	8	mm[#1SOV], nnn[#2SOV]	Y	Apollo/Conbraco 4010402 3/4" (H)
DCDA	Apollo/Conbraco	4060EE3	8	H	13-Apr-1993	13-Apr-2014	N	8	uu,cc,mm	Y	Apollo/Conbraco 4010402 3/4" (H)
DCDA	Apollo/Conbraco	4060EE6	8	H	1-Feb-2000	1-Feb-2015	N	8	mm[#1SOV], nnn[#2SOV]	Y	Apollo/Conbraco 4010402 3/4" (H)
DCDA	Apollo/Conbraco	4060G03	10								
DCDA	Apollo/Conbraco	4060G03	10								
DCDA	Apollo/Conbraco	4060GC3	10	H	13-Apr-1993	13-Apr-2014	N	8	uu,cc,mm	Y	Apollo/Conbraco 4010402 3/4" (H)
DCDA	Apollo/Conbraco	4060GC6	10	H	1-Feb-2000	1-Feb-2015	N	8	mm[#1SOV], nnn[#2SOV]	Y	Apollo/Conbraco 4010402 3/4" (H)
DCDA	Apollo/Conbraco	4060GE3	10	H	12-Apr-1993	13-Mar-2014	N	8	uu,cc,mm	Y	Apollo/Conbraco 4010402 3/4" (H)
DCDA	Apollo/Conbraco	4060GE6	10	H	1-Feb-2000	1-Feb-2015	N	8	mm[#1SOV], nnn[#2SOV]	Y	Apollo/Conbraco 4010402 3/4" (H)
DCDA	Apollo/Conbraco	4DCDA	4	H	16-Oct-2000	16-Oct-2015	N	9	(ll),mm	Y	Apollo/Conbraco 1/2DC 1/2" (H), Apollo/Conbraco W432100 1/2" (H)
DCDA	Apollo/Conbraco	4DCDA	4	VU	16-Oct-2000	16-Oct-2015	N	9	(ll),mm	Y	Apollo/Conbraco 1/2DC 1/2" (VU), Apollo/Conbraco W432100 1/2" (VU)
DCDA	Apollo/Conbraco	4DCDA6	4	H	10-Apr-2001	10-Apr-2016	N	9	(mm)[#1SOV],(nnn)[#2SOV]	Y	Apollo/Conbraco 1/2DC 1/2" (H), Apollo/Conbraco W432100 1/2" (H)

Type	Manufacturer	Model	Size	Orientation(s)	Approved	Renewed	≤0.25% Pb	Manual	Shutoffs	Spare Parts	Bypass
DCDA	Apollo/Conbraco	4DCDA6	4	VU	10-Apr-2001	10-Apr-2016	N	9	(mm)[#1SOV],(nnn)[#2SOV]	Y	Apollo/Conbraco 1/2DC 1/2" (VU), Apollo/Conbraco W432100 1/2" (VU)
DCDA	Apollo/Conbraco	4DCDA7	4	H	29-Sep-2004	29-Sep-2013	N	9	(mm)[#1SOV], (qqq)[#2SOV]	Y	Apollo/Conbraco 1/2DC 1/2" (H), Apollo/Conbraco W432100 1/2" (H)
DCDA	Apollo/Conbraco	4DCDA7	4	VU	29-Sep-2004	29-Sep-2013	N	9	(mm)[#1SOV], (qqq)[#2SOV]	Y	Apollo/Conbraco 1/2DC 1/2" (VU), Apollo/Conbraco W432100 1/2" (VU)
DCDA	Apollo/Conbraco	4DCDA8	4	H	29-Sep-2004	29-Sep-2013	N	9	(ppp),qqq	Y	Apollo/Conbraco 1/2DC 1/2" (H), Apollo/Conbraco W432100 1/2" (H)
DCDA	Apollo/Conbraco	4DCDA8	4	VU	29-Sep-2004	29-Sep-2013	N	9	(ppp),qqq	Y	Apollo/Conbraco 1/2DC 1/2" (VU), Apollo/Conbraco W432100 1/2" (VU)
DCDA	Apollo/Conbraco	4DCDAU	4	VUVD	10-Apr-2001	10-Apr-2016	N	9	(ll),mm	Y	Apollo/Conbraco 1/2DC 1/2" (H), Apollo/Conbraco W432100 1/2" (H)
DCDA	Apollo/Conbraco	4SG 600U	2 1/2								
DCDA	Apollo/Conbraco	4SG 600U	3								
DCDA	Apollo/Conbraco	4SG 600U	4								
DCDA	Apollo/Conbraco	4SG 600U	6								
DCDA	Apollo/Conbraco	4SG 600U	8								
DCDA	Apollo/Conbraco	4SG-600	2 1/2								
DCDA	Apollo/Conbraco	4SG-600	2 1/2								
DCDA	Apollo/Conbraco	4SG-600	3								
DCDA	Apollo/Conbraco	4SG-600	3								
DCDA	Apollo/Conbraco	4SG-600	4								
DCDA	Apollo/Conbraco	4SG-600	4								
DCDA	Apollo/Conbraco	4SG-600	6								
DCDA	Apollo/Conbraco	4SG-600	6								
DCDA	Apollo/Conbraco	4SG-600	8								
DCDA	Apollo/Conbraco	4SG-600	8								
DCDA	Apollo/Conbraco	6DCDA	6	H	16-Oct-2000	16-Oct-2015	N	9	(ll),mm	Y	Apollo/Conbraco 1/2DC 1/2" (H), Apollo/Conbraco W432100 1/2" (H)
DCDA	Apollo/Conbraco	6DCDA	6	VU	16-Oct-2000	16-Oct-2015	N	9	(ll),mm	Y	Apollo/Conbraco 1/2DC 1/2" (VU), Apollo/Conbraco W432100 1/2" (VU)
DCDA	Apollo/Conbraco	6DCDA6	6	H	10-Apr-2001	10-Apr-2016	N	9	(mm)[#1SOV],(nnn)[#2SOV]	Y	Apollo/Conbraco 1/2DC 1/2" (H), Apollo/Conbraco W432100 1/2" (H)
DCDA	Apollo/Conbraco	6DCDA6	6	VU	10-Apr-2001	10-Apr-2016	N	9	(mm)[#1SOV],(nnn)[#2SOV]	Y	Apollo/Conbraco 1/2DC 1/2" (VU), Apollo/Conbraco W432100 1/2" (VU)
DCDA	Apollo/Conbraco	6DCDA7	6	H	29-Sep-2004	29-Sep-2013	N	9	(mm)[#1SOV], (qqq)[#2SOV]	Y	Apollo/Conbraco 1/2DC 1/2" (H), Apollo/Conbraco W432100 1/2" (H)
DCDA	Apollo/Conbraco	6DCDA7	6	VU	29-Sep-2004	29-Sep-2013	N	9	(mm)[#1SOV], (qqq)[#2SOV]	Y	Apollo/Conbraco 1/2DC 1/2" (VU), Apollo/Conbraco W432100 1/2" (VU)
DCDA	Apollo/Conbraco	6DCDA8	6	H	29-Sep-2004	29-Sep-2013	N	9	(ppp),qqq	Y	Apollo/Conbraco 1/2DC 1/2" (H), Apollo/Conbraco W432100 1/2" (H)
DCDA	Apollo/Conbraco	6DCDA8	6	VU	29-Sep-2004	29-Sep-2013	N	9	(ppp),qqq	Y	Apollo/Conbraco 1/2DC 1/2" (VU), Apollo/Conbraco W432100 1/2" (VU)
DCDA	Apollo/Conbraco	6DCDAU	6	VUVD	10-Apr-2001	10-Apr-2016	N	9	(ll),mm	Y	Apollo/Conbraco 1/2DC 1/2" (H), Apollo/Conbraco W432100 1/2" (H)
DCDA	Apollo/Conbraco	8DCDA	8	H	16-Jan-2003	16-Jan-2015	N	9	(mm),ll	Y	Apollo/Conbraco 1/2DC 1/2" (H), Apollo/Conbraco W432100 1/2" (H)
DCDA	Apollo/Conbraco	8DCDA	8	VU	16-Jan-2003	16-Jan-2015	N	9	(mm),ll	Y	Apollo/Conbraco 1/2DC 1/2" (VU), Apollo/Conbraco W432100 1/2" (VU)
DCDA	Apollo/Conbraco	8DCDA7	8	H	29-Sep-2004	29-Sep-2013	N	9	(mm)[#1SOV], (qqq)[#2SOV]	Y	Apollo/Conbraco 1/2DC 1/2" (H), Apollo/Conbraco W432100 1/2" (H)
DCDA	Apollo/Conbraco	8DCDA7	8	VU	29-Sep-2004	29-Sep-2013	N	9	(mm)[#1SOV], (qqq)[#2SOV]	Y	Apollo/Conbraco 1/2DC 1/2" (VU), Apollo/Conbraco W432100 1/2" (VU)
DCDA	Apollo/Conbraco	8DCDA8	8	H	29-Sep-2004	29-Sep-2013	N	9	(ppp),qqq	Y	Apollo/Conbraco 1/2DC 1/2" (H), Apollo/Conbraco W432100 1/2" (H)
DCDA	Apollo/Conbraco	8DCDA8	8	VU	29-Sep-2004	29-Sep-2013	N	9	(ppp),qqq	Y	Apollo/Conbraco 1/2DC 1/2" (VU), Apollo/Conbraco W432100 1/2" (VU)
DCDA	Apollo/Conbraco	DCDA4S	10	H	16-Jan-2003	16-Jan-2015	N	9	(mm),ll, xxxxx, zzzzz, bbbbbb, cccccc	N	Apollo/Conbraco 1/2DC 1/2" (H), Apollo/Conbraco W432100 1/2" (H)
DCDA	Apollo/Conbraco	DCDA4S	10	VU	16-Jan-2003	16-Jan-2015	N	9	(mm),ll, xxxxx, zzzzz, bbbbbb, cccccc	N	Apollo/Conbraco 1/2DC 1/2" (VU), Apollo/Conbraco W432100 1/2" (VU)
DCDA	Apollo/Conbraco	DCDA4SG	2 1/2	H	18-Oct-2007	18-Oct-2013	N	9	(yyy)ppp,qqq,ttt,xxxxx,yyyyy,zzzzz,aaaaaa	N	Apollo/Conbraco 4S103 1/2" (H), Apollo/Conbraco W432100 1/2" (H)
DCDA	Apollo/Conbraco	DCDA4SG	2 1/2	VU	18-Oct-2007	18-Oct-2013	N	9	(yyy)ppp,qqq,ttt,xxxxx,yyyyy,zzzzz,aaaaaa	N	Apollo/Conbraco 4S103 1/2" (VU), Apollo/Conbraco W432100 1/2" (VU)
DCDA	Apollo/Conbraco	DCDA4SG	3	H	18-Oct-2007	18-Oct-2013	N	9	(yyy)ppp,qqq,ttt,xxxxx,yyyyy,zzzzz,aaaaaa	N	Apollo/Conbraco 4S103 1/2" (H), Apollo/Conbraco W432100 1/2" (H)
DCDA	Apollo/Conbraco	DCDA4SG	3	VU	18-Oct-2007	18-Oct-2013	N	9	(yyy)ppp,qqq,ttt,xxxxx,yyyyy,zzzzz,aaaaaa	N	Apollo/Conbraco 4S103 1/2" (VU), Apollo/Conbraco W432100 1/2" (VU)
DCDA	Apollo/Conbraco	DCDA4SG	4	H	18-Oct-2007	18-Oct-2013	N	9	(yyy)ppp,qqq,ttt,xxxxx,yyyyy,zzzzz,aaaaaa	N	Apollo/Conbraco 4S103 1/2" (H), Apollo/Conbraco W432100 1/2" (H)
DCDA	Apollo/Conbraco	DCDA4SG	4	VU	18-Oct-2007	18-Oct-2013	N	9	(yyy)ppp,qqq,ttt,xxxxx,yyyyy,zzzzz,aaaaaa	N	Apollo/Conbraco 4S103 1/2" (VU), Apollo/Conbraco W432100 1/2" (VU)
DCDA	Apollo/Conbraco	DCDA4SG	6	H	18-Oct-2007	18-Oct-2013	N	9	(yyy)ppp,qqq,ttt,xxxxx,yyyyy,zzzzz,aaaaaa	N	Apollo/Conbraco 4S103 1/2" (H), Apollo/Conbraco W432100 1/2" (H)
DCDA	Apollo/Conbraco	DCDA4SG	6	VU	18-Oct-2007	18-Oct-2013	N	9	(yyy)ppp,qqq,ttt,xxxxx,yyyyy,zzzzz,aaaaaa	N	Apollo/Conbraco 4S103 1/2" (VU), Apollo/Conbraco W432100 1/2" (VU)
DCDA	Apollo/Conbraco	DCDA4SG	8	H	18-Oct-2007	18-Oct-2013	N	9	(yyy)ppp,qqq,ttt,xxxxx,yyyyy,zzzzz,aaaaaa	N	Apollo/Conbraco 4S103 1/2" (H), Apollo/Conbraco W432100 1/2" (H)
DCDA	Apollo/Conbraco	DCDA4SG	8	VU	18-Oct-2007	18-Oct-2013	N	9	(yyy)ppp,qqq,ttt,xxxxx,yyyyy,zzzzz,aaaaaa	N	Apollo/Conbraco 4S103 1/2" (VU), Apollo/Conbraco W432100 1/2" (VU)
DCDA	Apollo/Conbraco	DCDA4SGN	2 1/2	VUVD	18-Oct-2007	18-Oct-2013	N	9	(yyy)ppp,qqq,ttt	Y	Apollo/Conbraco 4S103 1/2" (H), Apollo/Conbraco W432100 1/2" (H)
DCDA	Apollo/Conbraco	DCDA4SGN	3	VUVD	18-Oct-2007	18-Oct-2013	N	9	(yyy)ppp,qqq,ttt	Y	Apollo/Conbraco 4S103 1/2" (H), Apollo/Conbraco W432100 1/2" (H)
DCDA	Apollo/Conbraco	DCDA4SGN	4	VUVD	18-Oct-2007	18-Oct-2013	N	9	(yyy)ppp,qqq,ttt	Y	Apollo/Conbraco 4S103 1/2" (H), Apollo/Conbraco W432100 1/2" (H)
DCDA	Apollo/Conbraco	DCDA4SGN	6	VUVD	18-Oct-2007	18-Oct-2013	N	9	(yyy)ppp,qqq,ttt	Y	Apollo/Conbraco 4S103 1/2" (H), Apollo/Conbraco W432100 1/2" (H)
DCDA	Apollo/Conbraco	DCDA4SGN	8	VUVD	18-Oct-2007	18-Oct-2013	N	9	(yyy)ppp,qqq,ttt	Y	Apollo/Conbraco 4S103 1/2" (H), Apollo/Conbraco W432100 1/2" (H)
DCDA	Apollo/Conbraco	DCDALF4A	2 1/2	H	30-Oct-2013		Y	10	(yyy), cccc, dddd, mmmm, nnnn, xxxxx, yyyyy, zzzzz, aaaaaa	N	Apollo DCLF4A 1/2" (H)
DCDA	Apollo/Conbraco	DCDALF4A	2 1/2	VU	30-Oct-2013		Y	10	(yyy), cccc, dddd, mmmm, nnnn, xxxxx, yyyyy, zzzzz, aaaaaa	N	Apollo DCLF4A 1/2" (VU)
DCDA	Apollo/Conbraco	DCDALF4A	3	H	30-Oct-2013		Y	10	(yyy), cccc, dddd, mmmm, nnnn, xxxxx, yyyyy, zzzzz, aaaaaa	N	Apollo DCLF4A 1/2" (H)
DCDA	Apollo/Conbraco	DCDALF4A	3	VU	30-Oct-2013		Y	10	(yyy), cccc, dddd, mmmm, nnnn, xxxxx, yyyyy, zzzzz, aaaaaa	N	Apollo DCLF4A 1/2" (VU)
DCDA	Apollo/Conbraco	DCDALF4A	4	H	24-Jun-2013		Y	10	(yyy), cccc, dddd, mmmm, nnnn, xxxxx, yyyyy, zzzzz, aaaaaa	N	Apollo DCLF4A 1/2" (H)
DCDA	Apollo/Conbraco	DCDALF4A	4	VU	24-Jun-2013		Y	10	(yyy), cccc, dddd, mmmm, nnnn, xxxxx, yyyyy, zzzzz, aaaaaa	N	Apollo DCLF4A 1/2" (VU)
DCDA	Apollo/Conbraco	DCDALF4A	6	H	24-Jun-2013		Y	10	(yyy), cccc, dddd, mmmm, nnnn, xxxxx, yyyyy, zzzzz, aaaaaa	N	Apollo DCLF4A 1/2" (H)
DCDA	Apollo/Conbraco	DCDALF4A	6	VU	24-Jun-2013		Y	10	(yyy), cccc, dddd, mmmm, nnnn, xxxxx, yyyyy, zzzzz, aaaaaa	N	Apollo DCLF4A 1/2" (VU)
DCDA	Apollo/Conbraco	DCDALF4A	8	H	15-May-2014		Y	10	(yyy), cccc, dddd, mmmm, nnnn, xxxxx, yyyyy, zzzzz, aaaaaa	N	Apollo DCLF4A 1/2" (H)
DCDA	Apollo/Conbraco	DCDALF4A	8	VU	15-May-2014		Y	10	(yyy), cccc, dddd, mmmm, nnnn, xxxxx, yyyyy, zzzzz, aaaaaa	N	Apollo DCLF4A 1/2" (VU)
DCDA	Apollo/Conbraco	DCDALF4AN	2 1/2	VUVD	10-Jun-2014		Y	10	(yyy), cccc, dddd, mmmm, nnnn, xxxxx, yyyyy, zzzzz, aaaaaa	N	Apollo DCLF4A 1/2" (H)
DCDA	Apollo/Conbraco	DCDALF4AN	3	VUVD	8-Apr-2014		Y	10	(yyy), cccc, dddd, mmmm, nnnn, xxxxx, yyyyy, zzzzz, aaaaaa	N	Apollo DCLF4A 1/2" (H)
DCDA	Apollo/Conbraco	DCDALF4AN	4	VUVD	23-Jan-2014		Y	10	(yyy), cccc, dddd, mmmm, nnnn, xxxxx, yyyyy, zzzzz, aaaaaa	N	Apollo DCLF4A 1/2" (H)
DCDA	Apollo/Conbraco	DCDALF4AN	6	VUVD	10-Jun-2014		Y	10	(yyy), cccc, dddd, mmmm, nnnn, xxxxx, yyyyy, zzzzz, aaaaaa	N	Apollo DCLF4A 1/2" (H)
DCDA	Apollo/Conbraco	DCDALF4AN	8	VUVD	14-Mar-2014		Y	10	(yyy), cccc, dddd, mmmm, nnnn, xxxxx, yyyyy, zzzzz, aaaaaa	N	
DCDA	Apollo/Conbraco	DCDALF4AR	2 1/2	H	9-Nov-2015		N	10	(cccc), dddd, mmmm, nnnn, xxxxx, yyyyy, zzzzz, aaaaaa	N	Apollo/Conbraco DCLF4A 1/2" (H)
DCDA	Apollo/Conbraco	DCDALF4AR	2 1/2	VU	9-Nov-2015		N	10	(cccc), dddd, mmmm, nnnn, xxxxx, yyyyy, zzzzz, aaaaaa	N	Apollo/Conbraco DCLF4A 1/2" (VU)
DCDA	Apollo/Conbraco	DCDALF4AR	3	H	9-Nov-2015		N	10	(cccc), dddd, mmmm, nnnn, xxxxx, yyyyy, zzzzz, aaaaaa	N	Apollo/Conbraco DCLF4A 1/2" (H)
DCDA	Apollo/Conbraco	DCDALF4AR	3	VU	9-Nov-2015		N	10	(cccc), dddd, mmmm, nnnn, xxxxx, yyyyy, zzzzz, aaaaaa	N	Apollo/Conbraco DCLF4A 1/2" (VU)
DCDA	Apollo/Conbraco	DCDALF4AR	4	H	21-Sep-2015		N	10	(cccc), dddd, mmmm, nnnn, xxxxx, yyyyy, zzzzz, aaaaaa	N	Apollo/Conbraco DCLF4A 1/2" (H)
DCDA	Apollo/Conbraco	DCDALF4AR	4	VU	21-Sep-2015		N	10	(cccc), dddd, mmmm, nnnn, xxxxx, yyyyy, zzzzz, aaaaaa	N	Apollo/Conbraco DCLF4A 1/2" (VU)
DCDA	Apollo/Conbraco	DCDALF4AR	6	H	21-Sep-2015		N	10	(cccc), dddd, mmmm, nnnn, xxxxx, yyyyy, zzzzz, aaaaaa	N	Apollo/Conbraco DCLF4A 1/2" (H)
DCDA	Apollo/Conbraco	DCDALF4AR	6	VU	21-Sep-2015		N	10	(cccc), dddd, mmmm, nnnn, xxxxx, yyyyy, zzzzz, aaaaaa	N	Apollo/Conbraco DCLF4A 1/2" (VU)
DCDA	Apollo/Conbraco	DCDALF4AR	8	H	21-Dec-2015		N	10	(cccc), dddd, mmmm, nnnn, xxxxx, yyyyy, zzzzz, aaaaaa	N	Apollo/Conbraco DCLF4A 1/2" (H)
DCDA	Apollo/Conbraco	DCDALF4AR	8	VU	21-Dec-2015		N	10	(cccc), dddd, mmmm, nnnn, xxxxx, yyyyy, zzzzz, aaaaaa	N	Apollo/Conbraco DCLF4A 1/2" (VU)
DCDA	Conbraco						N				
DCDA	Febco	856	2 1/2	H	19-Mar-1997	19-Mar-2015	N	8	(ff),mm,oo,pp,uu,zzz,cccc,ffff,gggg	Y	Febco 805YB 3/4" (H)
DCDA	Febco	856	2 1/2	VU	5-Jan-2000	5-Jan-2014	N	8	(ff),mm,oo,pp,uu,zzz,cccc,ffff,gggg	Y	Febco 805YB 3/4" (VU)
DCDA	Febco	856	3	H	19-Mar-1997	19-Mar-2015	N	8	(ff),mm,oo,pp,uu,zzz,cccc,ffff,gggg	Y	Febco 805YB 3/4" (H)
DCDA	Febco	856	3	VU	5-Jan-2000	5-Jan-2014	N	8	(ff),mm,oo,pp,uu,zzz,cccc,ffff,gggg	Y	Febco 805YB 3/4" (VU)
DCDA	Febco	856	4	H	4-May-1994	4-May-2015	N	8	(ff),mm,oo,pp,uu,nnn,zzz,cccc,ffff,gggg	Y	Febco 805YB 3/4" (H)
DCDA	Febco	856	4	VU	16-Apr-1996	16-Apr-2014	N	8	(ff),mm,oo,pp,uu,nnn,zzz,cccc,ffff,gggg	Y	Febco 805YB 3/4" (VU)
DCDA	Febco	856	6	H	4-May-1994	4-May-2015	N	8	(ff),mm,oo,pp,uu,nnn,zzz,cccc,ffff,gggg	Y	Febco 805YB 3/4" (H)
DCDA	Febco	856	6	VU	16-Apr-1996	16-Apr-2014	N	8	(ff),mm,oo,pp,uu,nnn,zzz,cccc,ffff,gggg	Y	Febco 805YB 3/4" (VU)
DCDA	Febco	856	8	H	4-Oct-1995	4-Oct-2013	N	8	(ff),mm,oo,pp,uu,nnn,zzz,cccc,ffff,gggg	Y	Febco 805YB 3/4" (H)
DCDA	Febco	856	8	VU	5-Jan-2000	5-Jan-2014	N	8	(ff),mm,oo,pp,uu,nnn,zzz,cccc,ffff,gggg	Y	Febco 805YB 3/4" (VU)
DCDA	Febco	858	2	H	1-Aug-2006	1-Aug-2015	N	9	bbb,jjjj	N	Watts 007QT 1/2" (H)
DCDA	Febco	858	2	VU	1-Aug-2006	1-Aug-2015	N	9	bbb,jjjj	N	Watts 007QT 1/2" (VU)
DCDA	Febco	858	2 1/2	H	1-Aug-2006	1-Aug-2015	N	8	(pp), gg, hh,ll, mm, oo, tt, uu, zz, fff	Y	Watts 007M2QT 3/4" (H), Watts 007M1QT 3/4" (H)
DCDA	Febco	858	2 1/2	VU	1-Aug-2006	1-Aug-2015	N	8	(pp), gg, hh,ll, mm, oo, tt, uu, zz, fff	Y	Watts 007M2QT 3/4" (VU)
DCDA	Febco	858	3	H	1-Aug-2006	1-Aug-2015	N	8	(pp), gg, hh,ll, mm, oo, tt, uu, zz, fff	Y	Watts 007M2QT 3/4" (H), Watts 007M1QT 3/4" (H)
DCDA	Febco	876	2 1/2	VUVD	10-Mar-1995	10-Mar-2016	N	8	ff,mm,oo,pp,uu,cccc,zzz,ffff,gggg	Y	Febco 805YB 3/4" (H)
DCDA	Febco	876	3	VUVD	10-Mar-1995	10-Mar-2016	N	8	ff,mm,oo,pp,uu,cccc,zzz,ffff,gggg	Y	Febco 805YB 3/4" (H)
DCDA	Febco	876	4	VUVD	4-May-1994	4-May-2015	N	8	ff,mm,oo,pp,uu,cccc,zzz,ffff,gggg	Y	Febco 805YB 3/4" (H)
DCDA	Febco	876	6	VUVD	4-May-1994	4-May-2015	N	8	ff,mm,oo,pp,uu,cccc,zzz,ffff,gggg	Y	Febco 805YB 3/4" (H)
DCDA	Febco	876	8	VUVD	24-May-1995	24-May-2013	N	8	ff,mm,oo,pp,uu,cccc,zzz,ffff,gggg	Y	Febco 805YB 3/4" (H)
DCDA	Febco	876	10	VUVD	4-Oct-1996	4-Oct-2014	N	8	ff,mm,oo,pp,uu,cccc,zzz,ffff,gggg	Y	Febco 805YB 3/4" (H)
DCDA	Febco	806 Type YD	3								
DCDA	Febco	806 Type YD	4								
DCDA	Febco	806 Type YD	6								
DCDA	Febco	806 Type YD	8								
DCDA	Febco	806 Type YD	10								
DCDA	Febco	806YD	3	H	26-Sep-1988	26-Sep-2015	N	8	(ff),mm,oo,pp,uu,zzz,ffff,gggg	Y	Febco 805Y 3/4" (H), Febco 805YB 3/4"(H)
DCDA	Febco	806YD	4	H	10-Jul-1987	10-Jul-2014	N	7	(ff),mm,oo,pp,uu,zzz,ffff,gggg	Y	Febco 805Y 3/4" (H), Febco 805YB 3/4"(H)
DCDA	Febco	806YD	6	H	10-Jul-1987	10-Jul-2014	N	7	(ff),mm,oo,pp,uu,zzz,ffff,gggg	Y	Febco 805Y 3/4" (H), Febco 805YB 3/4"(H)
DCDA	Febco	806YD	8	H	10-Jul-1987	10-Jul-2014	N	7	(ff),mm,oo,pp,uu,zzz,ffff,gggg	Y	Febco 805Y 3/4" (H), Febco 805YB 3/4"(H)
DCDA	Febco	806YD	10	H	10-Jul-1987	10-Jul-2014	N	7	(ff),mm,oo,pp,uu,zzz,ffff,gggg	Y	Febco 805Y 3/4" (H), Febco 805YB 3/4"(H)
DCDA	Febco	856ST	2 1/2	H	22-May-2012	22-May-2015	N	9	(ll),mm,oo,pp,zzz,cccc,dddd,eeee,ffff,gggg,nnnnn	N	Watts 719QT 3/4" (H)
DCDA	Febco	856ST	2 1/2	VU	22-May-2012	22-May-2015	N	9	(ll),mm,oo,pp,zzz,cccc,dddd,eeee,ffff,gggg,nnnnn	N	Watts 719QT 3/4" (VU)
DCDA	Febco	856ST	3	H	22-May-2012	22-May-2015	N	9	(ll),mm,oo,pp,zzz,cccc,dddd,eeee,ffff,gggg,nnnnn	N	Watts 719QT 3/4" (H)
DCDA	Febco	856ST	3	VU	22-May-2012	22-May-2015	N	9	(ll),mm,oo,pp,zzz,cccc,dddd,eeee,ffff,gggg,nnnnn	N	Watts 719QT 3/4" (VU)
DCDA	Febco	856ST	4	H	22-May-2012	22-May-2015	N	9	(ll),mm,oo,pp,zzz,cccc,dddd,eeee,ffff,gggg,nnnnn	N	Watts 719QT 3/4" (H)
DCDA	Febco	856ST	4	VU	22-May-2012	22-May-2015	N	9	(ll),mm,oo,pp,zzz,cccc,dddd,eeee,ffff,gggg,nnnnn	N	Watts 719QT 3/4" (VU)
DCDA	Febco	856ST	6	H	22-May-2012	22-May-2015	N	9	(ll),mm,oo,pp,zzz,cccc,dddd,eeee,ffff,gggg,nnnnn	N	Watts 719QT 3/4" (H)
DCDA	Febco	856ST	6	VU	9-Aug-2012	9-Aug-2015	N	9	(ll),mm,oo,pp,zzz,cccc,dddd,eeee,ffff,gggg,nnnnn	N	Watts 719QT 3/4" (H)
DCDA	Febco	856ST	8	H	22-May-2012	22-May-2015	N	9	(ll),mm,oo,pp,zzz,cccc,dddd,eeee,ffff,gggg,nnnnn	N	Watts 719QT 3/4" (H)
DCDA	Febco	856ST	8	VU	9-Aug-2012	9-Aug-2015	N	9	(ll),mm,oo,pp,zzz,cccc,dddd,eeee,ffff,gggg,nnnnn	N	Watts 719QT 3/4" (H)
DCDA	Febco	856ST	10	H	3-Sep-2013		N	9	(ll),mm,oo,pp,zzz,cccc,dddd,eeee,ffff,gggg,nnnnn	N	Watts 719QT 3/4" (H)
DCDA	Febco	856ST	10	VU	3-Sep-2013		N	9	(ll),mm,oo,pp,zzz,cccc,dddd,eeee,ffff,gggg,nnnnn	N	Watts 719QT 3/4" (H)
DCDA	Febco	876V	2 1/2	VUVD	8-Mar-1996	8-Mar-2014	N	8	(ff),ee,ll,mm,oo,pp,tt,uu,zzz,ffff,gggg	Y	Febco 805YB 3/4" (H)
DCDA	Febco	876V	2 1/2	VUVU	8-Mar-1996	8-Mar-2014	N	8	(ff),ee,ll,mm,oo,pp,tt,uu,zzz,ffff,gggg	Y	Febco 805YB 3/4" (H)
DCDA	Febco	876V	3	VUVD	8-Mar-1996	8-Mar-2014	N	8	(ff),ee,ll,mm,oo,pp,tt,uu,zzz,ffff,gggg	Y	Febco 805YB 3/4" (H)

Type	Manufacturer	Model	Size	Orientation(s)	Approved	Renewed	≤0.25% Pb	Manual	Shutoffs	Spare Parts	Bypass
DCDA	Febco	876V	3	VUVU	8-Mar-1996	8-Mar-2014	N	8	(ff),ee,ll,mm,oo,pp,tt,uu,zzz,ffff,gggg	Y	Febco 805YB 3/4" (H)
DCDA	Febco	876V	4	VUVD	8-Mar-1996	8-Mar-2014	N	8	(ff),ee,ll,mm,oo,pp,tt,uu,zzz,ffff,gggg	Y	Febco 805YB 3/4" (H)
DCDA	Febco	876V	4	VUVU	8-Mar-1996	8-Mar-2014	N	8	(ff),ee,ll,mm,oo,pp,tt,uu,zzz,ffff,gggg	Y	Febco 805YB 3/4" (H)
DCDA	Febco	876V	6	VUVD	8-Mar-1996	8-Mar-2014	N	8	(ff),ee,ll,mm,oo,pp,tt,uu,zzz,ffff,gggg	Y	Febco 805YB 3/4" (H)
DCDA	Febco	876V	6	VUVU	8-Mar-1996	8-Mar-2014	N	8	(ff),ee,ll,mm,oo,pp,tt,uu,zzz,ffff,gggg	Y	Febco 805YB 3/4" (H)
DCDA	Febco	876V	8	VUVD	6-Jan-1997	6-Jan-2014	N	8	(ff),mm,oo,pp,uu,zzz,ffff,gggg	Y	Febco 805YB 3/4" (H)
DCDA	Febco	876V	8	VUVU	6-Jan-1997	6-Jan-2014	N	8	(ff),mm,oo,pp,uu,zzz,ffff,gggg	Y	Febco 805YB 3/4" (H)
DCDA	Febco	876V	10	VUVD	11-Jul-1997	11-Jul-2015	N	8	(ee),ff,ll,mm,oo,pp,tt,uu,zzz,ffff,gggg	Y	Febco 805YB 3/4" (H)
DCDA	Febco	876V	10	VUVU	11-Jul-1997	11-Jul-2015	N	8	(ee),ff,ll,mm,oo,pp,tt,uu,zzz,ffff,gggg	Y	Febco 805YB 3/4" (H)
DCDA	Febco	876VST	2 1/2	VUVD	22-May-2012	22-May-2015	N	9	(ll),mm,oo,pp,zzz,cccc,dddd,eeee,ffff,gggg,nnnnn	N	Watts 719QT 3/4" (H)
DCDA	Febco	876VST	2 1/2	VUVU	22-May-2012	22-May-2015	N	9	(ll),mm,oo,pp,zzz,cccc,dddd,eeee,ffff,gggg,nnnnn	N	Watts 719QT 3/4" (H)
DCDA	Febco	876VST	3	VUVD	22-May-2012	22-May-2015	N	9	(ll),mm,oo,pp,zzz,cccc,dddd,eeee,ffff,gggg,nnnnn	N	Watts 719QT 3/4" (H)
DCDA	Febco	876VST	3	VUVU	22-May-2012	22-May-2015	N	9	(ll),mm,oo,pp,zzz,cccc,dddd,eeee,ffff,gggg,nnnnn	N	Watts 719QT 3/4" (H)
DCDA	Febco	876VST	4	VUVD	22-May-2012	22-May-2015	N	9	(ll),mm,oo,pp,zzz,cccc,dddd,eeee,ffff,gggg,nnnnn	N	Watts 719QT 3/4" (H)
DCDA	Febco	876VST	4	VUVU	22-May-2012	22-May-2015	N	9	(ll),mm,oo,pp,zzz,cccc,dddd,eeee,ffff,gggg,nnnnn	N	Watts 719QT 3/4" (H)
DCDA	Febco	876VST	6	VUVD	22-May-2012	22-May-2015	N	9	(ll),mm,oo,pp,zzz,cccc,dddd,eeee,ffff,gggg,nnnnn	N	Watts 719QT 3/4" (H)
DCDA	Febco	876VST	6	VUVU	22-May-2012	22-May-2015	N	9	(ll),mm,oo,pp,zzz,cccc,dddd,eeee,ffff,gggg,nnnnn	N	Watts 719QT 3/4" (H)
DCDA	Febco	876VST	8	VUVD	22-May-2012	22-May-2015	N	9	(ll),mm,oo,pp,zzz,cccc,dddd,eeee,ffff,gggg,nnnnn	N	Watts 719QT 3/4" (H)
DCDA	Febco	876VST	8	VUVU	22-May-2012	22-May-2015	N	9	(ll),mm,oo,pp,zzz,cccc,dddd,eeee,ffff,gggg,nnnnn	N	Watts 719QT 3/4" (H)
DCDA	Watts	007DCDA	2	H	16-Jun-1997	16-Jun-2015	N	9	(bbb),jjjj,rrrrr	N	Watts 007QT 1/2" (H)
DCDA	Watts	007DCDA	2	VU	16-Jun-1997	16-Jun-2015	N	9	(bbb),jjjj,rrrrr	N	Watts 007QT 1/2" (VU)
DCDA	Watts	007DCDA	2 1/2	H	11-Oct-1993	11-Oct-2014	N	8	(pp),gg,hh,ll,mm,oo,tt,uu,zz,ffff,gggg	N	Watts 007M2QT 3/4" (H), Watts 007M1QT 3/4" (H)
DCDA	Watts	007DCDA	2 1/2	VU	27-Aug-1996	27-Aug-2014	N	8	(pp),gg,hh,ll,mm,oo,tt,uu,zz,ffff,gggg	N	Watts 007M2QT 3/4" (VU)
DCDA	Watts	007DCDA	3	H	19-Sep-1992	19-Sep-2013	N	8	(pp),hh,mm,uu,zz,ffff,gggg	N	Watts 007M2QT 3/4" (H), Watts 007M1QT 3/4" (H)
DCDA	Watts	007DCDA-FP	2	H	1-Sep-2009	1-Sep-2015	N	9	(eeeee)	N	Ames 2000B 1/2" (H), Watts 007QT 1/2" (H)
DCDA	Watts	007M1DCDA	2	H	19-Jun-2015		N	9	(eeeee), bbb, jjjj,rrrrr	N	Watts 007QT 1/2" (H)
DCDA	Watts	007M1DCDA	2	VU	19-Jun-2015		N	9	(eeeee), bbb, jjjj,rrrrr	N	Watts 007QT 1/2" (VU)
DCDA	Watts	709DCDA	3	H	19-Apr-1987	19-Apr-2014	N	6	(pp),hh,uu,zz,eee,ffff,gggg	N	Watts 007QT 1/2" (H), Watts 007M1QT 3/4" (H), Watts 709QT 3/4" (H)
DCDA	Watts	709DCDA	4	H	27-Jul-1987	27-Jul-2014	N	6	(pp),hh,uu,zz,eee,ffff,gggg	N	Watts 007QT 1/2" (H), Watts 007M1QT 3/4" (H), Watts 709QT 3/4" (H)
DCDA	Watts	709DCDA	4	VU	27-Aug-1996	27-Aug-2014	N	8	(pp),hh,uu,zz,eee,ffff,gggg	N	Watts 007QT 1/2" (VU), Watts 007M2QT 3/4" (VU)
DCDA	Watts	709DCDA	6	H	27-Jul-1987	27-Jul-2014	N	6	(pp),hh,uu,zz,eee,ffff,gggg	N	Watts 007QT 1/2" (H), Watts 007M1QT 3/4" (H), Watts 709QT 3/4" (H)
DCDA	Watts	709DCDA	6	VU	5-Dec-1996	5-Dec-2014	N	8	(pp),hh,mm,uu,zz,eee,ffff,gggg	N	Watts 007QT 1/2" (VU)
DCDA	Watts	709DCDA	8	H	19-Apr-1987	19-Apr-2014	N	6	(pp),hh,mm,uu,zz,eee,ffff,gggg	N	Watts 007QT 1/2" (H), Watts 007M1QT 3/4" (H), Watts 709QT 3/4" (H)
DCDA	Watts	709DCDA	8	VU	5-Dec-1996	5-Dec-2014	N	8	(pp),hh,mm,uu,zz,eee,ffff,gggg	N	Watts 007QT 1/2" (VU)
DCDA	Watts	709DCDA	10	H	27-Jul-1987	27-Jul-2014	N	6	(pp),hh,mm,uu,zz,eee,ffff,gggg	N	Watts 007QT 1/2" (H), Watts 007M1QT 3/4" (H), Watts 709QT 3/4" (H)
DCDA	Watts	709DCDA	10	VU	5-Dec-1996	5-Dec-2014	N	8	(pp),hh,mm,uu,zz,eee,ffff,gggg	N	Watts 007QT 1/2" (VU)
DCDA	Watts	709DDC	3								
DCDA	Watts	709DDC	4								
DCDA	Watts	709DDC	4								
DCDA	Watts	709DDC	6								
DCDA	Watts	709DDC	8								
DCDA	Watts	709DDC	10								
DCDA	Watts	757aDCDABF	2 1/2	H	6-Nov-2003	6-Nov-2015	N	9	(yyy)	N	Watts 007M3QT 3/4" (H)
DCDA	Watts	757aDCDABF	2 1/2	VU	6-Nov-2003	6-Nov-2015	N	9	(yyy)	N	Watts 007M3QT 3/4" (VU)
DCDA	Watts	757aDCDABF	3	H	6-Nov-2003	6-Nov-2015	N	9	(yyy)	N	Watts 007M3QT 3/4" (H)
DCDA	Watts	757aDCDABF	3	VU	6-Nov-2003	6-Nov-2015	N	9	(yyy)	N	Watts 007M3QT 3/4" (VU)
DCDA	Watts	757aDCDABF	4	H	6-Nov-2003	6-Nov-2015	N	9	(yyy)	N	Watts 007M3QT 3/4" (H)
DCDA	Watts	757aDCDABF	4	VU	6-Nov-2003	6-Nov-2015	N	9	(yyy)	N	Watts 007M3QT 3/4" (VU)
DCDA	Watts	757aDCDABF	6	H	3-Nov-2004	3-Nov-2013	N	9	(yyy)	N	Watts 007M3QT 3/4 (H)
DCDA	Watts	757aDCDABF	6	VU	18-Jan-2005	18-Jan-2014	N	9	(yyy)	N	Watts 007M3QT 3/4" (VU)
DCDA	Watts	757aDCDAGV	2 1/2	H	6-Nov-2003	6-Nov-2015	N	9	(zzz)	N	Watts 007M3QT 3/4" (H)
DCDA	Watts	757aDCDAGV	2 1/2	VU	6-Nov-2003	6-Nov-2015	N	9	(zzz)	N	Watts 007M3QT 3/4" (VU)
DCDA	Watts	757aDCDAGV	3	H	6-Nov-2003	6-Nov-2015	N	9	(zzz)	N	Watts 007M3QT 3/4" (H)
DCDA	Watts	757aDCDAGV	3	VU	6-Nov-2003	6-Nov-2015	N	9	(zzz)	N	Watts 007M3QT 3/4" (VU)
DCDA	Watts	757aDCDAGV	4	H	6-Nov-2003	6-Nov-2015	N	9	(zzz)	N	Watts 007M3QT 3/4" (H)
DCDA	Watts	757aDCDAGV	4	VU	6-Nov-2003	6-Nov-2015	N	9	(zzz)	N	Watts 007M3QT 3/4" (VU)
DCDA	Watts	757aDCDAGV	6	H	18-Jan-2005	18-Jan-2014	N	9	(zzz)	N	Watts 007M3QT 3/4" (VU)
DCDA	Watts	757aDCDAGV	6	VU	18-Jan-2005	18-Jan-2014	N	9	(zzz)	N	Watts 007M3QT 3/4" (VU)
DCDA	Watts	757DCDABF	2 1/2	H	4-Oct-2005	4-Oct-2014	N	9	(yyy)	N	Watts 007M3QT 3/4" (H)
DCDA	Watts	757DCDABF	2 1/2	VU	4-Oct-2005	4-Oct-2014	N	9	(yyy)	N	Watts 007M3QT 3/4" (V)
DCDA	Watts	757DCDABF	3	H	4-Oct-2005	4-Oct-2014	N	9	(yyy)	N	Watts 007M3QT 3/4" (H)
DCDA	Watts	757DCDABF	3	VU	4-Oct-2005	4-Oct-2014	N	9	(yyy)	N	Watts 007M3QT 3/4" (V)
DCDA	Watts	757DCDABF	4	H	4-Oct-2005	4-Oct-2014	N	9	(yyy)	N	Watts 007M3QT 3/4" (H)
DCDA	Watts	757DCDABF	4	VU	4-Oct-2005	4-Oct-2014	N	9	(yyy)	N	Watts 007M3QT 3/4" (V)
DCDA	Watts	757DCDABF	6	H	19-Mar-2007	23-Mar-2016	N	9	(yyy)	N	Watts 007M3QT 3/4" (H)
DCDA	Watts	757DCDABF	6	VU	19-Mar-2007	23-Mar-2016	N	9	(yyy)	N	Watts 007M3QT 3/4" (VU)
DCDA	Watts	757DCDABF	8	H	9-Mar-2007	9-Mar-2016	N	9	(yyy)	N	Watts 007M3QT 3/4" (H & VU)
DCDA	Watts	757DCDABF	8	VU	9-Mar-2007	9-Mar-2016	N	9	(yyy)	N	Watts 007M3QT 3/4" (H & VU)
DCDA	Watts	757DCDABF	10	H	17-Sep-2009	17-Sep-2015	N	9	(yyy)	N	Watts 007M3QT 3/4" (H), Ames 2000 BM3 (H)
DCDA	Watts	757DCDABF	10	VU	17-Sep-2009	17-Sep-2015	N	9	(yyy)	N	Watts 007M3QT 3/4" (V), Ames 2000 BM3 (V)
DCDA	Watts	757DCDAGV	2 1/2	H	4-Oct-2005	4-Oct-2014	N	9	(zzz)	N	Watts 007M3QT 3/4" (H)
DCDA	Watts	757DCDAGV	2 1/2	VU	4-Oct-2005	4-Oct-2014	N	9	(zzz)	N	Watts 007M3QT 3/4" (V)
DCDA	Watts	757DCDAGV	3	H	4-Oct-2005	4-Oct-2014	N	9	(zzz)	N	Watts 007M3QT 3/4" (H)
DCDA	Watts	757DCDAGV	3	VU	4-Oct-2005	4-Oct-2014	N	9	(zzz)	N	Watts 007M3QT 3/4" (V)
DCDA	Watts	757DCDAGV	4	H	4-Oct-2005	4-Oct-2014	N	9	(zzz)	N	Watts 007M3QT 3/4" (H)
DCDA	Watts	757DCDAGV	4	VU	4-Oct-2005	4-Oct-2014	N	9	(zzz)	N	Watts 007M3QT 3/4" (V)
DCDA	Watts	757DCDAGV	6	H	19-Mar-2007	23-Mar-2016	N	9	(zzz)	N	Watts 007M3QT 3/4" (H)
DCDA	Watts	757DCDAGV	6	VU	19-Mar-2007	23-Mar-2016	N	9	(zzz)	N	Watts 007M3QT 3/4" (VU)
DCDA	Watts	757DCDAGV	8	H	9-Mar-2007	9-Mar-2016	N	9	(zzz)	N	Watts 007M3QT 3/4" (H & VU)
DCDA	Watts	757DCDAGV	8	VU	9-Mar-2007	9-Mar-2016	N	9	(zzz)	N	Watts 007M3QT 3/4" (H & VU)
DCDA	Watts	757DCDAGV	10	H	17-Sep-2009	17-Sep-2015	N	9	(zzz)	N	Watts 007M3QT 3/4" (H), Ames 2000 BM3 (H)
DCDA	Watts	757DCDAGV	10	VU	17-Sep-2009	17-Sep-2015	N	9	(zzz)	N	Watts 007M3QT 3/4" (V), Ames 2000 BM3 (V)
DCDA	Watts	757NDCDABF	2 1/2	VUVD	7-Apr-2009	7-Apr-2015	N	9	(yyy)	N	Watts 007M3QT 3/4" (H)
DCDA	Watts	757NDCDABF	3	VUVD	7-Apr-2009	7-Apr-2015	N	9	(yyy)	N	Watts 007M3QT 3/4" (H)
DCDA	Watts	757NDCDABF	4	VUVD	7-Apr-2009	7-Apr-2015	N	9	(yyy)	N	Watts 007M3QT 3/4" (H)
DCDA	Watts	757NDCDABF	6	VUVD	7-Apr-2009	7-Apr-2015	N	9	(yyy)	N	Watts 007M3QT 3/4" (H)
DCDA	Watts	757NDCDABF	8	VUVD	3-Jan-2013	3-Jan-2016	N	9	(yyy)	N	Watts 007M3QT 3/4" (H)
DCDA	Watts	757NDCDABF	10	VUVD	28-May-2013		N	9	(yyy)	N	Watts 007M3QT 3/4" (H), Ames 2000BM3 3/4" (H)
DCDA	Watts	757NDCDAGV	2 1/2	VUVD	7-Apr-2009	7-Apr-2015	N	9	(zzz)	N	Watts 007M3QT 3/4" (H)
DCDA	Watts	757NDCDAGV	3	VUVD	7-Apr-2009	7-Apr-2015	N	9	(zzz)	N	Watts 007M3QT 3/4" (H)
DCDA	Watts	757NDCDAGV	4	VUVD	7-Apr-2009	7-Apr-2015	N	9	(zzz)	N	Watts 007M3QT 3/4" (H)
DCDA	Watts	757NDCDAGV	6	VUVD	7-Apr-2009	7-Apr-2015	N	9	(zzz)	N	Watts 007M3QT 3/4" (H)
DCDA	Watts	757NDCDAGV	8	VUVD	3-Jan-2013	3-Jan-2016	N	9	(zzz)	N	Watts 007M3QT 3/4" (H)
DCDA	Watts	757NDCDAGV	10	VUVD	28-May-2013		N	9	(zzz)	N	Watts 007M3QT 3/4" (H), Ames 2000BM3 3/4" (H)
DCDA	Watts	767aDCDABF	2 1/2	H	6-Nov-2003	6-Nov-2015	N	9	(yyy)	N	Watts 007M3QT 3/4" (H)
DCDA	Watts	767aDCDABF	2 1/2	VU	6-Nov-2003	6-Nov-2015	N	9	(yyy)	N	Watts 007M3QT 3/4" (VU)
DCDA	Watts	767aDCDABF	3	H	6-Nov-2003	6-Nov-2015	N	9	(yyy)	N	Watts 007M3QT 3/4" (H)
DCDA	Watts	767aDCDABF	3	VU	6-Nov-2003	6-Nov-2015	N	9	(yyy)	N	Watts 007M3QT 3/4" (VU)
DCDA	Watts	767aDCDABF	4	H	30-Aug-2006	30-Aug-2015	N	9	(yyy)	N	Watts 007M3QT 3/4" (VU)
DCDA	Watts	767aDCDABF	4	VU	18-Jan-2005	18-Jan-2014	N	9	(yyy)	N	Watts 007M3QT 3/4" (VU)
DCDA	Watts	767aDCDAGV	2 1/2	H	6-Nov-2003	6-Nov-2015	N	9	(zzz)	N	Watts 007M3QT 3/4" (H)
DCDA	Watts	767aDCDAGV	2 1/2	VU	6-Nov-2003	6-Nov-2015	N	9	(zzz)	N	Watts 007M3QT 3/4" (VU)
DCDA	Watts	767aDCDAGV	3	H	6-Nov-2003	6-Nov-2015	N	9	(zzz)	N	Watts 007M3QT 3/4" (H)
DCDA	Watts	767aDCDAGV	3	VU	6-Nov-2003	6-Nov-2015	N	9	(zzz)	N	Watts 007M3QT 3/4" (VU)
DCDA	Watts	767aDCDAGV	4	H	6-Nov-2003	6-Nov-2015	N	9	(zzz)	N	Watts 007M3QT 3/4" (H)
DCDA	Watts	767aDCDAGV	4	VU	18-Jan-2005	18-Jan-2014	N	9	(zzz)	N	Watts 007M3QT 3/4" (VU)
DCDA	Watts	767DCDABF	2 1/2	H	4-Oct-2005	4-Oct-2014	N	9	(yyy)	N	Watts 007M3QT 3/4" (H)
DCDA	Watts	767DCDABF	2 1/2	VU	4-Oct-2005	4-Oct-2014	N	9	(yyy)	N	Watts 007M3QT 3/4" (V)
DCDA	Watts	767DCDABF	3	H	4-Oct-2005	4-Oct-2014	N	9	(yyy)	N	Watts 007M3QT 3/4" (H)
DCDA	Watts	767DCDABF	3	VU	4-Oct-2005	4-Oct-2014	N	9	(yyy)	N	Watts 007M3QT 3/4" (V)
DCDA	Watts	767DCDABF	4	H	19-Mar-2007	23-Mar-2016	N	9	(yyy)	N	Watts 007M3QT 3/4" (H)
DCDA	Watts	767DCDABF	4	VU	19-Mar-2007	23-Mar-2016	N	9	(yyy)	N	Watts 007M3QT 3/4" (VU)
DCDA	Watts	767DCDABF	6	H	9-Mar-2007	9-Mar-2016	N	9	(yyy)	N	Watts 007M3QT 3/4" (H & VU)
DCDA	Watts	767DCDABF	6	VU	9-Mar-2007	9-Mar-2016	N	9	(yyy)	N	Watts 007M3QT 3/4" (H & VU)
DCDA	Watts	767DCDABF	8	H	17-Sep-2009	17-Sep-2015	N	9	(yyy)	N	Watts 007M3QT 3/4" (H), Ames 2000 BM3 (H)
DCDA	Watts	767DCDABF	8	VU	17-Sep-2009	17-Sep-2015	N	9	(yyy)	N	Watts 007M3QT 3/4" (V), Ames 2000 BM3 (V)
DCDA	Watts	767DCDABF	10	H	17-Sep-2009	17-Sep-2015	N	9	(yyy)	N	Watts 007M3QT 3/4" (H), Ames 2000 BM3 (H)
DCDA	Watts	767DCDABF	10	VU	17-Sep-2009	17-Sep-2015	N	9	(yyy)	N	Watts 007M3QT 3/4" (V), Ames 2000 BM3 (V)
DCDA	Watts	767DCDAGV	2 1/2	H	4-Oct-2005	4-Oct-2014	N	9	(zzz)	N	Watts 007M3QT 3/4" (H)
DCDA	Watts	767DCDAGV	2 1/2	VU	4-Oct-2005	4-Oct-2014	N	9	(zzz)	N	Watts 007M3QT 3/4" (V)
DCDA	Watts	767DCDAGV	3	H	4-Oct-2005	4-Oct-2014	N	9	(zzz)	N	Watts 007M3QT 3/4" (H)
DCDA	Watts	767DCDAGV	3	VU	4-Oct-2005	4-Oct-2014	N	9	(zzz)	N	Watts 007M3QT 3/4" (V)
DCDA	Watts	767DCDAGV	4	H	19-Mar-2007	23-Mar-2016	N	9	(zzz)	N	Watts 007M3QT 3/4" (H)
DCDA	Watts	767DCDAGV	4	VU	19-Mar-2007	23-Mar-2016	N	9	(zzz)	N	Watts 007M3QT 3/4" (VU)
DCDA	Watts	767DCDAGV	6	H	9-Mar-2007	9-Mar-2016	N	9	(zzz)	N	Watts 007M3QT 3/4" (H & VU)

Type	Manufacturer	Model	Size	Orientation(s)	Approved	Renewed	≤0.25% Pb	Manual	Shutoffs	Spare Parts	Bypass
DCDA	Watts	767DCDAGV	6	VU	9-Mar-2007	9-Mar-2016	N	9	(zzz)	N	Watts 007M3QT 3/4" (H & VU)
DCDA	Watts	767DCDAGV	8	H	17-Sep-2009	17-Sep-2015	N	9	(zzz)	N	Watts 007M3QT 3/4" (H), Ames 2000 BM3 (H)
DCDA	Watts	767DCDAGV	8	VU	17-Sep-2009	17-Sep-2015	N	9	(zzz)	N	Watts 007M3QT 3/4" (V), Ames 2000 BM3 (V)
DCDA	Watts	767DCDAGV	10	H	17-Sep-2009	17-Sep-2015	N	9	(zzz)	N	Watts 007M3QT 3/4" (H), Ames 2000 BM3 (H)
DCDA	Watts	767DCDAGV	10	VU	17-Sep-2009	17-Sep-2015	N	9	(zzz)	N	Watts 007M3QT 3/4" (V), Ames 2000 BM3 (V)
DCDA	Watts	767NDCDABF	2 1/2	VUVD	7-Apr-2009	7-Apr-2015	N	9	(yyy)	N	Watts 007M3QT 3/4" (H)
DCDA	Watts	767NDCDABF	3	VUVD	7-Apr-2009	7-Apr-2015	N	9	(yyy)	N	Watts 007M3QT 3/4" (H)
DCDA	Watts	767NDCDABF	4	VUVD	7-Apr-2009	7-Apr-2015	N	9	(yyy)	N	Watts 007M3QT 3/4" (H)
DCDA	Watts	767NDCDABF	6	VUVD	3-Jan-2013	3-Jan-2016	N	9	(yyy)	N	Watts 007M3QT 3/4" (H)
DCDA	Watts	767NDCDABF	8	VUVD	28-May-2013		N	9	(yyy)	N	Watts 007M3QT 3/4" (H), Ames 2000BM3 3/4" (H)
DCDA	Watts	767NDCDABF	10	VUVD	28-May-2013		N	9	(yyy)	N	Watts 007M3QT 3/4" (H), Ames 2000BM3 3/4" (H)
DCDA	Watts	767NDCDAGV	2 1/2	VUVD	7-Apr-2009	7-Apr-2015	N	9	(zzz)	N	Watts 007M3QT 3/4" (H)
DCDA	Watts	767NDCDAGV	3	VUVD	7-Apr-2009	7-Apr-2015	N	9	(zzz)	N	Watts 007M3QT 3/4" (H)
DCDA	Watts	767NDCDAGV	4	VUVD	7-Apr-2009	7-Apr-2015	N	9	(zzz)	N	Watts 007M3QT 3/4" (H)
DCDA	Watts	767NDCDAGV	6	VUVD	3-Jan-2013	3-Jan-2016	N	9	(zzz)	N	Watts 007M3QT 3/4" (H)
DCDA	Watts	767NDCDAGV	8	VUVD	28-May-2013		N	9	(zzz)	N	Watts 007M3QT 3/4" (H), Ames 2000BM3 3/4" (H)
DCDA	Watts	767NDCDAGV	10	VUVD	28-May-2013		N	9	(zzz)	N	Watts 007M3QT 3/4" (H), Ames 2000BM3 3/4" (H)
DCDA	Watts	770DCDA	4	H	20-May-1992	20-May-2013	N	8	pp,hh,mm,uu,zz	Y	Watts 007M1QT 3/4" (H)
DCDA	Watts	770DCDA	8	H	13-Jan-1993	13-Jan-2014	N	8	oo,gg,hh,ll,mm,pp,tt,uu	Y	Watts 007M1QT 3/4" (H)
DCDA	Watts	772DCDA	4	H	1-Aug-1992	1-Aug-2013	N	8	oo	Y	Watts 007M1QT 3/4" (H)
DCDA	Watts	772DCDA	10	H	13-Jan-1993	13-Jan-2014	N	8	oo	Y	Watts 007M1QT 3/4" (H)
DCDA	Watts	774DCDA	2 1/2	H	24-May-1995	24-May-2013	N	8	(uu),ee,ff,gg,hh,ll,mm,oo,pp,tt,ccc,ddd,ffff,gggg	N	Watts 007M2QT 3/4: (H), Ames 2000B 3/4" (H)
DCDA	Watts	774DCDA	3	H	24-May-1995	24-May-2013	N	8	(uu),ee,ff,gg,hh,ll,mm,oo,pp,tt,ccc,ddd,ffff,gggg	N	Watts 007M2QT 3/4: (H), Ames 2000B 3/4" (H)
DCDA	Watts	774DCDA	4	H	24-May-1995	24-May-2013	N	8	(uu),ee,ff,gg,hh,ll,mm,oo,pp,tt,ccc,ddd,ffff,gggg	N	Watts 007M2QT 3/4: (H), Ames 2000B 3/4" (H)
DCDA	Watts	774DCDA	6	H	9-Sep-1992	9-Sep-2013	N	8	(uu),ee,ff,gg,hh,ll,mm,oo,pp,tt,ccc,ddd,ffff,gggg	N	Watts 007M1QT 3/4" (H)
DCDA	Watts	774DCDA	8	H	16-Sep-1996	16-Sep-2014	N	8	(mm),ee,ff,gg,hh,ll,oo,pp,tt,uu,ccc,ddd,ffff,gggg	N	Watts 007M2QT 3/4: (H), Ames 2000B 3/4" (H)
DCDA	Watts	774DCDA	10	H	16-Feb-2001	16-Feb-2016	N	8	(ll),mm,ffff,gggg	N	Watts 007M2QT 3/4: (H), Ames 2000B 3/4" (H)
DCDA	Watts	774DCDA	12	H	18-Feb-2010	18-Feb-2016	N	9	(mm), ll	N	Ames 2000BM3 3/4" (H); Watts 007M3QT 3/4" (H)
DCDA	Watts	774DCDA	12	VU	21-Mar-2011	21-Mar-2014	N	9	(mm), ll	N	Ames 2000BM3 3/4" (H); Watts 007M3QT 3/4" (H)
DCDA	Watts	774DCDA-1	12	H	18-Feb-2010	18-Feb-2016	N	9	(mm), ll	N	Ames 200B 3/4" (H); Watts 719QT 3/4" (H)
DCDA	Watts	774DCDA-1	12	VU	21-Mar-2011	21-Mar-2014	N	9	(mm), ll	N	Ames 200B 3/4" (VU); Watts 719QT 3/4" (VU)
DCDA	Watts	774XDCDA	2 1/2	H	10-Sep-1996	10-Sep-2014	N	8	(mm),ee,ff,gg,hh,ll,oo,pp,tt,uu,ccc,ddd,ffff,gggg	N	Watts 007M2QT 3/4: (H), Ames 2000B 3/4" (H)
DCDA	Watts	774XDCDA	6	H	24-May-1995	24-May-2013	N	8	(uu),ee,ff,gg,hh,ll,mm,oo,pp,tt,uu,ccc,ddd,ffff,gggg	N	Watts 007M2QT 3/4: (H), Ames 2000B 3/4" (H)
DCDA	Watts	774XDCDA	8	H	9-Sep-1992	9-Sep-2013	N	8	(uu),ee,ff,gg,hh,ll,mm,oo,pp,tt,ccc,ddd,ffff,gggg	N	Watts 007M1QT 3/4" (H)
DCDA	Watts	LF757DCDABF	2 1/2	H	8-Jan-2014		Y	9	(yyy)	N	Watts LF007M3QT 3/4" (H)
DCDA	Watts	LF757DCDABF	2 1/2	VU	8-Jan-2014		Y	9	(yyy)	N	Watts LF007M3QT 3/4" (VU)
DCDA	Watts	LF757DCDABF	3	H	8-Jan-2014		Y	9	(yyy)	N	Watts LF007M3QT 3/4" (H)
DCDA	Watts	LF757DCDABF	3	VU	8-Jan-2014		Y	9	(yyy)	N	Watts LF007M3QT 3/4" (VU)
DCDA	Watts	LF757DCDABF	4	H	8-Jan-2014		Y	9	(yyy)	N	Watts LF007M3QT 3/4" (H)
DCDA	Watts	LF757DCDABF	4	VU	8-Jan-2014		Y	9	(yyy)	N	Watts LF007M3QT 3/4" (VU)
DCDA	Watts	LF757DCDABF	6	H	8-Jan-2014		Y	9	(yyy)	N	Watts LF007M3QT 3/4" (H)
DCDA	Watts	LF757DCDABF	6	VU	8-Jan-2014		Y	9	(yyy)	N	Watts LF007M3QT 3/4" (VU)
DCDA	Watts	LF757DCDABF	8	H	8-Jan-2014		Y	9	(yyy)	N	Watts LF007M3QT 3/4" (H)
DCDA	Watts	LF757DCDABF	8	VU	8-Jan-2014		Y	9	(yyy)	N	Watts LF007M3QT 3/4" (VU)
DCDA	Watts	LF757DCDABF	10	H	8-Jan-2014		Y	9	(yyy)	N	Watts LF007M3QT 3/4" (H)
DCDA	Watts	LF757DCDABF	10	VU	8-Jan-2014		Y	9	(yyy)	N	Watts LF007M3QT 3/4" (VU)
DCDA	Watts	LF757DCDAGV	2 1/2	H	8-Jan-2014		Y	9	(zzz)	N	Watts LF007M3QT 3/4" (H)
DCDA	Watts	LF757DCDAGV	2 1/2	VU	8-Jan-2014		Y	9	(zzz)	N	Watts LF007M3QT 3/4" (VU)
DCDA	Watts	LF757DCDAGV	3	H	8-Jan-2014		Y	9	(zzz)	N	Watts LF007M3QT 3/4" (H)
DCDA	Watts	LF757DCDAGV	3	VU	8-Jan-2014		Y	9	(zzz)	N	Watts LF007M3QT 3/4" (VU)
DCDA	Watts	LF757DCDAGV	4	H	8-Jan-2014		Y	9	(zzz)	N	Watts LF007M3QT 3/4" (H)
DCDA	Watts	LF757DCDAGV	4	VU	8-Jan-2014		Y	9	(zzz)	N	Watts LF007M3QT 3/4" (VU)
DCDA	Watts	LF757DCDAGV	6	H	8-Jan-2014		Y	9	(zzz)	N	Watts LF007M3QT 3/4" (H)
DCDA	Watts	LF757DCDAGV	6	VU	8-Jan-2014		Y	9	(zzz)	N	Watts LF007M3QT 3/4" (VU)
DCDA	Watts	LF757DCDAGV	8	H	8-Jan-2014		Y	9	(zzz)	N	Watts LF007M3QT 3/4" (H)
DCDA	Watts	LF757DCDAGV	8	VU	8-Jan-2014		Y	9	(zzz)	N	Watts LF007M3QT 3/4" (VU)
DCDA	Watts	LF757DCDAGV	10	H	8-Jan-2014		Y	9	(zzz)	N	Watts LF007M3QT 3/4" (H)
DCDA	Watts	LF757DCDAGV	10	VU	8-Jan-2014		Y	9	(zzz)	N	Watts LF007M3QT 3/4" (VU)
DCDA	Watts	LF757NDCDABF	2 1/2	VUVD	8-Jan-2014		Y	9	(yyy)	N	Watts LF007M3QT 3/4" (H)
DCDA	Watts	LF757NDCDABF	3	VUVD	8-Jan-2014		Y	9	(yyy)	N	Watts LF007M3QT 3/4" (H)
DCDA	Watts	LF757NDCDABF	4	VUVD	8-Jan-2014		Y	9	(yyy)	N	Watts LF007M3QT 3/4" (H)
DCDA	Watts	LF757NDCDABF	6	VUVD	8-Jan-2014		Y	9	(yyy)	N	Watts LF007M3QT 3/4" (H)
DCDA	Watts	LF757NDCDABF	8	VUVD	8-Jan-2014		Y	9	(yyy)	N	Watts LF007M3QT 3/4" (H)
DCDA	Watts	LF757NDCDABF	10	VUVD	8-Jan-2014		Y	9	(yyy)	N	Watts LF007M3QT 3/4" (H)
DCDA	Watts	LF757NDCDAGV	2 1/2	VUVD	8-Jan-2014		Y	9	(zzz)	N	Watts LF007M3QT 3/4" (H)
DCDA	Watts	LF757NDCDAGV	3	VUVD	8-Jan-2014		Y	9	(zzz)	N	Watts LF007M3QT 3/4" (H)
DCDA	Watts	LF757NDCDAGV	4	VUVD	8-Jan-2014		Y	9	(zzz)	N	Watts LF007M3QT 3/4" (H)
DCDA	Watts	LF757NDCDAGV	6	VUVD	8-Jan-2014		Y	9	(zzz)	N	Watts LF007M3QT 3/4" (H)
DCDA	Watts	LF757NDCDAGV	8	VUVD	8-Jan-2014		Y	9	(zzz)	N	Watts LF007M3QT 3/4" (H)
DCDA	Watts	LF757NDCDAGV	10	VUVD	8-Jan-2014		Y	9	(zzz)	N	Watts LF007M3QT 3/4" (H)
DCDA	Wilkins	350ADA	2 1/2	H	22-Jun-2005	22-Jun-2014	N	9	(qqq),ttt,yyy,zzz,uuuu,vvvv,xxxx,yyyy,kkkkk,lllll	N	Wilkins 950XLD 3/4" (H)
DCDA	Wilkins	350ADA	2 1/2	H	18-Feb-2014		Y	9	(qqq),ttt,www,yyy,xxxx,yyyy,kkkkk,lllll	N	Wilkins 950XLD 3/4" (H)
DCDA	Wilkins	350ADA	2 1/2	VU	22-Jun-2005	22-Jun-2014	N	9	(qqq),ttt,yyy,zzz,uuuu,vvvv,xxxx,yyyy,kkkkk,lllll	N	Wilkins 950XLD 3/4" (VU)
DCDA	Wilkins	350ADA	2 1/2	VU	18-Feb-2014		Y	9	(qqq),ttt,www,yyy,xxxx,yyyy,kkkkk,lllll	N	Wilkins 950XLD 3/4" (VU)
DCDA	Wilkins	350ADA	3	H	22-Jun-2005	22-Jun-2014	N	9	(qqq),ttt,yyy,zzz,uuuu,vvvv,xxxx,yyyy,kkkkk,lllll	N	Wilkins 950XLD 3/4" (H)
DCDA	Wilkins	350ADA	3	H	18-Feb-2014		Y	9	(qqq),ttt,www,yyy,xxxx,yyyy,kkkkk,lllll	N	Wilkins 950XLD 3/4" (H)
DCDA	Wilkins	350ADA	3	VU	22-Jun-2005	22-Jun-2014	N	9	(qqq),ttt,yyy,zzz,uuuu,vvvv,xxxx,yyyy,kkkkk,lllll	N	Wilkins 950XLD 3/4" (VU)
DCDA	Wilkins	350ADA	3	VU	18-Feb-2014		Y	9	(qqq),ttt,www,yyy,xxxx,yyyy,kkkkk,lllll	N	Wilkins 950XLD 3/4" (VU)
DCDA	Wilkins	350ADA	4	H	16-Mar-2004	16-Mar-2016	N	9	(qqq),ttt,www,yyy,zzz,eeee,uuuu,vvvv,xxxx,yyyy,kkkkk,lllll	N	Wilkins 950XLD 3/4" (H)
DCDA	Wilkins	350ADA	4	H	18-Feb-2014		Y	9	(qqq),ttt,www,yyy,xxxx,yyyy,kkkkk,lllll	N	Wilkins 950XLD 3/4" (H)
DCDA	Wilkins	350ADA	4	VU	16-Mar-2004	16-Mar-2016	N	9	(qqq),ttt,www,yyy,zzz,eeee,uuuu,vvvv,xxxx,yyyy,kkkkk,lllll	N	Wilkins 950XLD 3/4" (VU)
DCDA	Wilkins	350ADA	4	VU	18-Feb-2014		Y	9	(qqq),ttt,www,yyy,xxxx,yyyy,kkkkk,lllll	N	Wilkins 950XLD 3/4" (VU)
DCDA	Wilkins	350ADA	6	H	25-Nov-2003	25-Nov-2015	N	9	(qqq),ttt,www,yyy,zzz,eeee,uuuu,vvvv,xxxx,yyyy,kkkkk,lllll	N	Wilkins 950XLD 3/4" (H)
DCDA	Wilkins	350ADA	6	H	18-Feb-2014		Y	9	(qqq),ttt,www,yyy,xxxx,yyyy,kkkkk,lllll	N	Wilkins 950XLD 3/4" (H)
DCDA	Wilkins	350ADA	6	VU	25-Nov-2003	25-Nov-2015	N	9	(qqq),ttt,www,yyy,zzz,eeee,uuuu,vvvv,xxxx,yyyy,kkkkk,lllll	N	Wilkins 950XLD 3/4" (VU)
DCDA	Wilkins	350ADA	6	VU	18-Feb-2014		Y	9	(qqq),ttt,www,yyy,xxxx,yyyy,kkkkk,lllll	N	Wilkins 950XLD 3/4" (VU)
DCDA	Wilkins	350ADA	8	H	12-Feb-2004	12-Feb-2016	N	9	(qqq),ttt,www,yyy,zzz,eeee,uuuu,vvvv,xxxx,yyyy,kkkkk,lllll	N	Wilkins 950XLD 3/4" (H)
DCDA	Wilkins	350ADA	8	H	18-Feb-2014		Y	9	(qqq),ttt,www,yyy,xxxx,yyyy,kkkkk,lllll	N	Wilkins 950XLD 3/4" (H)
DCDA	Wilkins	350ADA	8	VU	12-Feb-2004	12-Feb-2016	N	9	(qqq),ttt,www,yyy,zzz,eeee,uuuu,vvvv,xxxx,yyyy,kkkkk,lllll	N	Wilkins 950XLD 3/4" (VU)
DCDA	Wilkins	350ADA	8	VU	18-Feb-2014		Y	9	(qqq),ttt,www,yyy,xxxx,yyyy,kkkkk,lllll	N	Wilkins 950XLD 3/4" (VU)
DCDA	Wilkins	350ADA	10	H	6-Apr-2006	6-Apr-2015	N	9	(qqq),ttt,yyy,uuuu,vvvv,xxxx,yyyy,kkkkk,lllll	N	Wilkins 950XLD 3/4" (H)
DCDA	Wilkins	350ADA	10	H	18-Feb-2014		Y	9	(qqq),ttt,www,yyy,xxxx,yyyy,kkkkk,lllll	N	Wilkins 950XLD 3/4" (H)
DCDA	Wilkins	350ADA	10	VU	6-Apr-2006	6-Apr-2015	N	9	(qqq),ttt,yyy,uuuu,vvvv,xxxx,yyyy,kkkkk,lllll	N	Wilkins 950XLD 3/4" (VU)
DCDA	Wilkins	350ADA	10	VU	18-Feb-2014		Y	9	(qqq),ttt,www,yyy,xxxx,yyyy,kkkkk,lllll	N	Wilkins 950XLD 3/4" (VU)
DCDA	Wilkins	350ADAR	2 1/2	H	16-Jun-2010	16-Jun-2013	N	9	(qqq),ttt,yyy,zzz,uuuu,vvvv,xxxx,yyyy,kkkkk,lllll	N	Wilkins 950XLD 3/4" (H)
DCDA	Wilkins	350ADAR	2 1/2	H	18-Feb-2014		Y	9	(qqq),ttt,www,yyy,xxxx,yyyy,kkkkk,lllll	N	Wilkins 950XLD 3/4" (H)
DCDA	Wilkins	350ADAR	2 1/2	VU	16-Jun-2010	16-Jun-2013	N	9	(qqq),ttt,yyy,zzz,uuuu,vvvv,xxxx,yyyy,kkkkk,lllll	N	Wilkins 950XLD 3/4" (VU)
DCDA	Wilkins	350ADAR	2 1/2	VU	18-Feb-2014		Y	9	(qqq),ttt,www,yyy,xxxx,yyyy,kkkkk,lllll	N	Wilkins 950XLD 3/4" (VU)
DCDA	Wilkins	350ADAR	3	H	16-Jun-2010	16-Jun-2013	N	9	(qqq),ttt,yyy,zzz,uuuu,vvvv,xxxx,yyyy,kkkkk,lllll	N	Wilkins 950XLD 3/4" (H)
DCDA	Wilkins	350ADAR	3	H	18-Feb-2014		Y	9	(qqq),ttt,www,yyy,xxxx,yyyy,kkkkk,lllll	N	Wilkins 950XLD 3/4" (H)
DCDA	Wilkins	350ADAR	3	VU	16-Jun-2010	16-Jun-2013	N	9	(qqq),ttt,yyy,zzz,uuuu,vvvv,xxxx,yyyy,kkkkk,lllll	N	Wilkins 950XLD 3/4" (VU)
DCDA	Wilkins	350ADAR	3	VU	18-Feb-2014		Y	9	(qqq),ttt,www,yyy,xxxx,yyyy,kkkkk,lllll	N	Wilkins 950XLD 3/4" (VU)
DCDA	Wilkins	350ADAR	4	H	25-Mar-2010	25-Mar-2016	N	9	(qqq),ttt,www,yyy,zzz,eeee,uuuu,vvvv,xxxx,yyyy,kkkkk,lllll	N	Wilkins 950XLD 3/4" (VU)
DCDA	Wilkins	350ADAR	4	H	18-Feb-2014		Y	9	(qqq),ttt,www,yyy,xxxx,yyyy,kkkkk,lllll	N	Wilkins 950XLD 3/4" (VU)
DCDA	Wilkins	350ADAR	4	VU	25-Mar-2010	25-Mar-2016	N	9	(qqq),ttt,www,yyy,zzz,eeee,uuuu,vvvv,xxxx,yyyy,kkkkk,lllll	N	Wilkins 950XLD 3/4" (H)
DCDA	Wilkins	350ADAR	4	VU	18-Feb-2014		Y	9	(qqq),ttt,www,yyy,xxxx,yyyy,kkkkk,lllll	N	Wilkins 950XLD 3/4" (H)
DCDA	Wilkins	350ADAR	6	H	25-Mar-2010	25-Mar-2016	N	9	(qqq),ttt,www,yyy,zzz,eeee,uuuu,vvvv,xxxx,yyyy,kkkkk,lllll	N	Wilkins 950XLD 3/4" (VU)
DCDA	Wilkins	350ADAR	6	H	18-Feb-2014		Y	9	(qqq),ttt,www,yyy,xxxx,yyyy,kkkkk,lllll	N	Wilkins 950XLD 3/4" (VU)
DCDA	Wilkins	350ADAR	6	VU	25-Mar-2010	25-Mar-2016	N	9	(qqq),ttt,www,yyy,zzz,eeee,uuuu,vvvv,xxxx,yyyy,kkkkk,lllll	N	Wilkins 950XLD 3/4" (H)
DCDA	Wilkins	350ADAR	6	VU	18-Feb-2014		Y	9	(qqq),ttt,www,yyy,xxxx,yyyy,kkkkk,lllll	N	Wilkins 950XLD 3/4" (H)
DCDA	Wilkins	350ADAR	8	H	25-Mar-2010	25-Mar-2016	N	9	(qqq),ttt,www,yyy,zzz,eeee,uuuu,vvvv,xxxx,yyyy,kkkkk,lllll	N	Wilkins 950XLD 3/4" (VU)
DCDA	Wilkins	350ADAR	8	H	18-Feb-2014		Y	9	(qqq),ttt,www,yyy,xxxx,yyyy,kkkkk,lllll	N	Wilkins 950XLD 3/4" (VU)
DCDA	Wilkins	350ADAR	8	VU	25-Mar-2010	25-Mar-2016	N	9	(qqq),ttt,www,yyy,zzz,eeee,uuuu,vvvv,xxxx,yyyy,kkkkk,lllll	N	Wilkins 950XLD 3/4" (H)
DCDA	Wilkins	350ADAR	8	VU	18-Feb-2014		Y	9	(qqq),ttt,www,yyy,xxxx,yyyy,kkkkk,lllll	N	Wilkins 950XLD 3/4" (H)
DCDA	Wilkins	350ADAR	10	H	25-Mar-2010	25-Mar-2016	N	9	(qqq),ttt,www,yyy,zzz,eeee,uuuu,vvvv,xxxx,yyyy,kkkkk,lllll	N	Wilkins 950XLD 3/4" (VU)
DCDA	Wilkins	350ADAR	10	H	18-Feb-2014		Y	9	(qqq),ttt,www,yyy,xxxx,yyyy,kkkkk,lllll	N	Wilkins 950XLD 3/4" (VU)
DCDA	Wilkins	350ADAR	10	VU	25-Mar-2010	25-Mar-2016	N	9	(qqq),ttt,www,yyy,zzz,eeee,uuuu,vvvv,xxxx,yyyy,kkkkk,lllll	N	Wilkins 950XLD 3/4" (H)
DCDA	Wilkins	350ADAR	10	VU	18-Feb-2014		Y	9	(qqq),ttt,www,yyy,xxxx,yyyy,kkkkk,lllll	N	Wilkins 950XLD 3/4" (H)
DCDA	Wilkins	350ASTDA	2 1/2	H	18-Apr-2013	18-Apr-2016	N	10	(qqq),ttt,www,yyy,uuuu,vvvv,xxxx,yyyy,kkkkk,lllll	N	Wilkins 950XLD 3/4" (H)
DCDA	Wilkins	350ASTDA	2 1/2	H	18-Feb-2014		Y	10	(qqq),ttt,www,yyy,uuuu,vvvv,xxxx,yyyy,kkkkk,lllll	N	Wilkins 950XLD 3/4" (H)
DCDA	Wilkins	350ASTDA	2 1/2	VU	18-Apr-2013	18-Apr-2016	N	10	(qqq),ttt,www,yyy,uuuu,vvvv,xxxx,yyyy,kkkkk,lllll	N	Wilkins 950XLD 3/4" (VU)
DCDA	Wilkins	350ASTDA	2 1/2	VU	18-Feb-2014		Y	10	(qqq),ttt,www,yyy,uuuu,vvvv,xxxx,yyyy,kkkkk,lllll	N	Wilkins 950XLD 3/4" (VU)
DCDA	Wilkins	350ASTDA	3	H	18-Apr-2013	18-Apr-2016	N	10	(qqq),ttt,www,yyy,uuuu,vvvv,xxxx,yyyy,kkkkk,lllll	N	Wilkins 950XLD 3/4" (H)
DCDA	Wilkins	350ASTDA	3	H	18-Feb-2014		Y	10	(qqq),ttt,www,yyy,uuuu,vvvv,xxxx,yyyy,kkkkk,lllll	N	Wilkins 950XLD 3/4" (H)
DCDA	Wilkins	350ASTDA	3	VU	18-Apr-2013	18-Apr-2016	N	10	(qqq),ttt,www,yyy,uuuu,vvvv,xxxx,yyyy,kkkkk,lllll	N	Wilkins 950XLD 3/4" (VU)

Type	Manufacturer	Model	Size	Orientation(s)	Approved	Renewed	≤0.25% Pb	Manual	Shutoffs	Spare Parts	Bypass
DCDA	Wilkins	350ASTDA	3	VU	18-Feb-2014		Y	10	(qqq),ttt,www,yyy,uuuu,vvvv,xxxx,yyyy,kkkkk,llllll	N	Wilkins 950XLD 3/4" (VU)
DCDA	Wilkins	350ASTDA	4	H	18-Apr-2013	18-Apr-2016	N	10	(qqq),ttt,www,yyy,uuuu,vvvv,xxxx,yyyy,kkkkk,llllll	N	Wilkins 950XLD 3/4" (H)
DCDA	Wilkins	350ASTDA	4	H	18-Feb-2014		Y	10	(qqq),ttt,www,yyy,uuuu,vvvv,xxxx,yyyy,kkkkk,llllll	N	Wilkins 950XLD 3/4" (H)
DCDA	Wilkins	350ASTDA	4	VU	18-Apr-2013	18-Apr-2016	N	10	(qqq),ttt,www,yyy,uuuu,vvvv,xxxx,yyyy,kkkkk,llllll	N	Wilkins 950XLD 3/4" (VU)
DCDA	Wilkins	350ASTDA	4	VU	18-Feb-2014		Y	10	(qqq),ttt,www,yyy,uuuu,vvvv,xxxx,yyyy,kkkkk,llllll	N	Wilkins 950XLD 3/4" (VU)
DCDA	Wilkins	350ASTDA	6	H	3-Jul-2013		N	10	(qqq),ttt,www,yyy,uuuu,vvvv,xxxx,yyyy,kkkkk,llllll	N	Wilkins 950XLD 3/4" (H)
DCDA	Wilkins	350ASTDA	6	H	18-Feb-2014		Y	10	(qqq),ttt,www,yyy,uuuu,vvvv,xxxx,yyyy,kkkkk,llllll	N	Wilkins 950XLD 3/4" (H)
DCDA	Wilkins	350ASTDA	6	VU	3-Jul-2013		N	10	(qqq),ttt,www,yyy,uuuu,vvvv,xxxx,yyyy,kkkkk,llllll	N	Wilkins 950XLD 3/4" (VU)
DCDA	Wilkins	350ASTDA	6	VU	18-Feb-2014		Y	10	(qqq),ttt,www,yyy,uuuu,vvvv,xxxx,yyyy,kkkkk,llllll	N	Wilkins 950XLD 3/4" (VU)
DCDA	Wilkins	350ASTDA	8	H	20-Feb-2014		Y	10	(qqq),ttt,www,yyy,uuuu,vvvv,xxxx,yyyy,kkkkk,llllll	N	Wilkins 950XLD 3/4" (H)
DCDA	Wilkins	350ASTDA	8	VU	20-Feb-2014		Y	10	(qqq),ttt,www,yyy,uuuu,vvvv,xxxx,yyyy,kkkkk,llllll	N	Wilkins 950XLD 3/4" (VU)
DCDA	Wilkins	350ASTDA	10	H	20-Feb-2014		Y	10	(qqq),ttt,www,yyy,uuuu,vvvv,xxxx,yyyy,kkkkk,llllll	N	Wilkins 950XLD 3/4" (H)
DCDA	Wilkins	350ASTDA	10	VU	20-Feb-2014		Y	10	(qqq),ttt,www,yyy,uuuu,vvvv,xxxx,yyyy,kkkkk,llllll	N	Wilkins 950XLD 3/4" (VU)
DCDA	Wilkins	350ASTDAR	2 1/2	H	9-Oct-2014		Y	10	(yyyy),ttt,www,yyy,uuuu,vvvv,xxxx,kkkkk,llllll	N	Wilkins 950XLD 3/4" (H)
DCDA	Wilkins	350ASTDAR	2 1/2	VU	9-Oct-2014		Y	10	(yyyy),ttt,www,yyy,uuuu,vvvv,xxxx,kkkkk,llllll	N	Wilkins 950XLD 3/4" (VU)
DCDA	Wilkins	350ASTDAR	3	H	9-Oct-2014		Y	10	(yyyy),ttt,www,yyy,uuuu,vvvv,xxxx,kkkkk,llllll	N	Wilkins 950XLD 3/4" (H)
DCDA	Wilkins	350ASTDAR	3	VU	9-Oct-2014		Y	10	(yyyy),ttt,www,yyy,uuuu,vvvv,xxxx,kkkkk,llllll	N	Wilkins 950XLD 3/4" (VU)
DCDA	Wilkins	350ASTDAR	4	H	9-Oct-2014		Y	10	(yyyy),ttt,www,yyy,uuuu,vvvv,xxxx,kkkkk,llllll	N	Wilkins 950XLD 3/4" (H)
DCDA	Wilkins	350ASTDAR	4	VU	9-Oct-2014		Y	10	(yyyy),ttt,www,yyy,uuuu,vvvv,xxxx,kkkkk,llllll	N	Wilkins 950XLD 3/4" (VU)
DCDA	Wilkins	350ASTDAR	6	H	18-Sep-2014		Y	10	(yyyy),ttt,www,yyy,uuuu,vvvv,xxxx,kkkkk,llllll	N	Wilkins 950XLD 3/4" (H)
DCDA	Wilkins	350ASTDAR	6	VU	18-Sep-2014		Y	10	(yyyy),ttt,www,yyy,uuuu,vvvv,xxxx,kkkkk,llllll	N	Wilkins 950XLD 3/4" (VU)
DCDA	Wilkins	350ASTDAR	8	H	18-Sep-2014		Y	10	(yyyy),ttt,www,yyy,uuuu,vvvv,xxxx,kkkkk,llllll	N	Wilkins 950XLD 3/4" (H)
DCDA	Wilkins	350ASTDAR	8	VU	18-Sep-2014		Y	10	(yyyy),ttt,www,yyy,uuuu,vvvv,xxxx,kkkkk,llllll	N	Wilkins 950XLD 3/4" (VU)
DCDA	Wilkins	350ASTDAR	10	H	18-Sep-2014		Y	10	(yyyy),ttt,www,yyy,uuuu,vvvv,xxxx,kkkkk,llllll	N	Wilkins 950XLD 3/4" (H)
DCDA	Wilkins	350ASTDAR	10	VU	18-Sep-2014		Y	10	(yyyy),ttt,www,yyy,uuuu,vvvv,xxxx,kkkkk,llllll	N	Wilkins 950XLD 3/4" (VU)
DCDA	Wilkins	350DA	2 1/2	H	3-Apr-2002	3-Apr-2014	N	9	(hh),ff,mm,uu,zz,vvvv,wwww,yyyy,zzzz,kkkkk	N	Wilkins 950XLD 3/4" (H)
DCDA	Wilkins	350DA	2 1/2	H	18-Feb-2014		Y	9	(hh),qqq,vvv,www,yyyy,zzzz,kkkkk	N	Wilkins 950XLD 3/4" (H)
DCDA	Wilkins	350DA	2 1/2	VU	8-Oct-2002	8-Oct-2014	N	9	(hh),ff,mm,uu,zz,vvvv,wwww,yyyy,zzzz	N	Wilkins 950XLD 3/4" (VU)
DCDA	Wilkins	350DA	2 1/2	VU	18-Feb-2014		Y	9	(hh),qqq,vvv,www,yyyy,zzzz,kkkkk	N	Wilkins 950XLD 3/4" (VU)
DCDA	Wilkins	350DA	3	H	3-Apr-2002	3-Apr-2014	N	9	(hh),ff,mm,uu,zz,vvvv,wwww,yyyy,zzzz,kkkkk	N	Wilkins 950XLD 3/4" (H)
DCDA	Wilkins	350DA	3	H	3-Apr-2002	3-Apr-2014	Y	9	(hh),ff,mm,uu,zz,vvvv,wwww,yyyy,zzzz,kkkkk	N	Wilkins 950XLD 3/4" (H)
DCDA	Wilkins	350DA	3	H	18-Feb-2014		Y	9	(hh),qqq,vvv,www,yyyy,zzzz	N	Wilkins 950XLD 3/4" (H)
DCDA	Wilkins	350DA	3	VU	8-Oct-2002	8-Oct-2014	N	9	(hh),ff,mm,uu,zz,vvvv,wwww,yyyy,zzzz,kkkkk	N	Wilkins 950XLD 3/4" (VU)
DCDA	Wilkins	350DA	3	VU	8-Oct-2002	8-Oct-2014	Y	9	(hh),ff,mm,uu,zz,vvvv,wwww,yyyy,zzzz,kkkkk	N	Wilkins 950XLD 3/4" (VU)
DCDA	Wilkins	350DA	3	VU	18-Feb-2014		Y	9	(hh),qqq,vvv,www,yyyy,zzzz	N	Wilkins 950XLD 3/4" (VU)
DCDA	Wilkins	350DA	4	H	15-Sep-1999	15-Sep-2014	N	9	(hh),ff,mm,uu,zz,qqq,vvv,www,zzz,eeee,vvvv,wwww,yyyy,zzzz,kkkkk	N	Wilkins 950XLD 3/4" (H)
DCDA	Wilkins	350DA	4	H	15-Sep-1999	15-Sep-2014	Y	9	(hh),ff,mm,uu,zz,qqq,vvv,www,zzz,eeee,vvvv,wwww,yyyy,zzzz,kkkkk	N	Wilkins 950XLD 3/4" (H)
DCDA	Wilkins	350DA	4	H	18-Feb-2014		Y	9	(hh),qqq,vvv,www,yyyy,zzzz	N	Wilkins 950XLD 3/4" (H)
DCDA	Wilkins	350DA	4	VU	9-Sep-2000	9-Sep-2015	N	9	(hh),ff,mm,uu,zz,qqq,vvv,www,zzz,eeee,vvvv,wwww,yyyy,zzzz,kkkkk	N	Wilkins 950XLD 3/4" (VU)
DCDA	Wilkins	350DA	4	VU	9-Sep-2000	9-Sep-2015	Y	9	(hh),ff,mm,uu,zz,qqq,vvv,www,zzz,eeee,vvvv,wwww,yyyy,zzzz,kkkkk	N	Wilkins 950XLD 3/4" (VU)
DCDA	Wilkins	350DA	4	VU	18-Feb-2014		Y	9	(hh),qqq,vvv,www,yyyy,zzzz	N	Wilkins 950XLD 3/4" (VU)
DCDA	Wilkins	350DA	6	H	18-Oct-1999	18-Oct-2014	N	9	(hh),ff,mm,uu,zz,qqq,vvv,www,zzz,eeee,vvvv,wwww,yyyy,zzzz,kkkkk	N	Wilkins 950XLD 3/4" (H)
DCDA	Wilkins	350DA	6	H	18-Oct-1999	18-Oct-2014	Y	9	(hh),ff,mm,uu,zz,qqq,vvv,www,zzz,eeee,vvvv,wwww,yyyy,zzzz,kkkkk	N	Wilkins 950XLD 3/4" (H)
DCDA	Wilkins	350DA	6	H	18-Feb-2014		Y	9	(hh),qqq,vvv,www,yyyy,zzzz	N	Wilkins 950XLD 3/4" (H)
DCDA	Wilkins	350DA	6	VU	5-Jan-2000	5-Jan-2014	N	9	(hh),ff,mm,uu,zz,qqq,vvv,www,zzz,eeee,vvvv,wwww,yyyy,zzzz,kkkkk	N	Wilkins 950XLD 3/4" (VU)
DCDA	Wilkins	350DA	6	VU	5-Jan-2000	5-Jan-2014	Y	9	(hh),ff,mm,uu,zz,qqq,vvv,www,zzz,eeee,vvvv,wwww,yyyy,zzzz,kkkkk	N	Wilkins 950XLD 3/4" (VU)
DCDA	Wilkins	350DA	6	VU	18-Feb-2014		Y	9	(hh),qqq,vvv,www,yyyy,zzzz	N	Wilkins 950XLD 3/4" (VU)
DCDA	Wilkins	350DA	8	H	3-Jul-2002	3-Jul-2014	N	9	(hh),ff,mm,uu,zz,qqq,vvv,www,zzz,eeee,vvvv,wwww,yyyy,zzzz,kkkkk	N	Wilkins 950XLD 3/4" (H)
DCDA	Wilkins	350DA	8	H	3-Jul-2002	3-Jul-2014	Y	9	(hh),ff,mm,uu,zz,qqq,vvv,www,zzz,eeee,vvvv,wwww,yyyy,zzzz,kkkkk	N	Wilkins 950XLD 3/4" (H)
DCDA	Wilkins	350DA	8	H	18-Feb-2014		Y	9	(hh),qqq,vvv,www,yyyy,zzzz	N	Wilkins 950XLD 3/4" (H)
DCDA	Wilkins	350DA	8	VU	16-Jan-2003	16-Jan-2015	N	9	(hh),ff,mm,uu,zz,qqq,vvv,www,zzz,eeee,vvvv,wwww,yyyy,zzzz,kkkkk	N	Wilkins 950XLD 3/4" (VU)
DCDA	Wilkins	350DA	8	VU	16-Jan-2003	16-Jan-2015	Y	9	(hh),ff,mm,uu,zz,qqq,vvv,www,zzz,eeee,vvvv,wwww,yyyy,zzzz,kkkkk	N	Wilkins 950XLD 3/4" (VU)
DCDA	Wilkins	350DA	8	VU	18-Feb-2014		Y	9	(hh),qqq,vvv,www,yyyy,zzzz	N	Wilkins 950XLD 3/4" (VU)
DCDA	Wilkins	350DA	10	H	28-Aug-2002	28-Aug-2014	N	9	(hh),ff,mm,uu,zz,qqq,vvv,www,zzz,eeee,vvvv,wwww,yyyy,zzzz,kkkkk	N	Wilkins 950XLD 3/4" (H)
DCDA	Wilkins	350DA	10	H	28-Aug-2002	28-Aug-2014	Y	9	(hh),ff,mm,uu,zz,qqq,vvv,www,zzz,eeee,vvvv,wwww,yyyy,zzzz,kkkkk	N	Wilkins 950XLD 3/4" (H)
DCDA	Wilkins	350DA	10	H	18-Feb-2014		Y	9	(hh),qqq,vvv,www,yyyy,zzzz	N	Wilkins 950XLD 3/4" (H)
DCDA	Wilkins	350DA	10	VU	14-Mar-2003	14-Mar-2015	N	9	(hh),ff,mm,uu,zz,qqq,vvv,www,zzz,eeee,vvvv,wwww,yyyy,zzzz,kkkkk	N	Wilkins 950XLD 3/4" (VU)
DCDA	Wilkins	350DA	10	VU	14-Mar-2003	14-Mar-2015	Y	9	(hh),ff,mm,uu,zz,qqq,vvv,www,zzz,eeee,vvvv,wwww,yyyy,zzzz,kkkkk	N	Wilkins 950XLD 3/4" (VU)
DCDA	Wilkins	350DA	10	VU	18-Feb-2014		Y	9	(hh),qqq,vvv,www,yyyy,zzzz	N	Wilkins 950XLD 3/4" (VU)
DCDA	Wilkins	350DA	12	H	20-Oct-2009	20-Oct-2015	N	9	(hh),vvvv,wwww,yyyy,zzzz,kkkkk	N	Wilkins 950XLD 3/4" (H)
DCDA	Wilkins	350DA	12	H	20-Oct-2009	20-Oct-2015	Y	9	(hh),ssss,tttt,uuuu,vvvv,wwww,xxxx,yyyy,zzzz,aaaaa	N	Wilkins 950XLD 3/4" (H)
DCDA	Wilkins	350DA	12	H	18-Feb-2014		Y	9	(hh),vvvv,wwww,yyyy,zzzz,kkkkk	N	Wilkins 950XLD 3/4" (H)
DCDA	Wilkins	450DA	4	VUVD	12-Apr-2000	12-Apr-2015	N	9	(qqq),ttt,www,yyy,zzz,eeee,uuuu,vvvv,xxxx,yyyy,kkkkk,llllll	N	Wilkins 950XLD 3/4" (H)
DCDA	Wilkins	450DA	4	VUVD	18-Feb-2014		Y	9	(hh),qqq,vvv,www,yyyy,zzzz	N	Wilkins 950XLD 3/4" (H)
DCDA	Wilkins	450DA	6	VUVD	24-May-2000	24-May-2015	N	9	(qqq),ttt,www,yyy,zzz,eeee,uuuu,vvvv,xxxx,yyyy,kkkkk,llllll	N	Wilkins 950XLD 3/4" (H)
DCDA	Wilkins	450DA	6	VUVD	18-Feb-2014		Y	9	(hh),qqq,vvv,www,yyyy,zzzz	N	Wilkins 950XLD 3/4" (H)
DCDA	Wilkins	450DA	8	VUVD	3-Aug-2004	3-Aug-2013	N	9	(qqq),ttt,www,yyy,zzz,eeee,uuuu,vvvv,xxxx,yyyy,kkkkk,llllll	N	Wilkins 950XLD 3/4" (H)
DCDA	Wilkins	450DA	8	VUVD	18-Feb-2014		Y	9	(hh),qqq,vvv,www,yyyy,zzzz	N	Wilkins 950XLD 3/4" (H)
DCDA	Wilkins	450DA	10	VUVD	3-Aug-2004	3-Aug-2013	N	9	(qqq),ttt,www,yyy,zzz,eeee,uuuu,vvvv,xxxx,yyyy,kkkkk,llllll	N	Wilkins 950XLD 3/4" (H)
DCDA	Wilkins	450DA	10	VUVD	18-Feb-2014		Y	9	(hh),qqq,vvv,www,yyyy,zzzz	N	Wilkins 950XLD 3/4" (H)
DCDA	Wilkins	950DA	2 1/2	H	2-Jan-1994	2-Jan-2014	N	8	(hh),ff,mm,uu,zz,vvvv,wwww,yyyy,zzzz	N	Wilkins 950XL 3/4" (H), Wilkins 950 3/4" (H)
DCDA	Wilkins	950DA	2 1/2	VU	12-Dec-1996	12-Dec-2014	N	8	(hh),ff,mm,uu,zz,vvvv,wwww,yyyy,zzzz	N	Wilkins 950XL 3/4" (VU)
DCDA	Wilkins	950DA	3	H	2-Jan-1994	2-Jan-2014	N	8	(hh),ff,mm,uu,zz,vvvv,wwww,yyyy,zzzz	N	Wilkins 950XL 3/4" (H), Wilkins 950 3/4" (H)
DCDA	Wilkins	950DA	3	VU	12-Dec-1996	12-Dec-2014	N	8	(hh),ff,mm,uu,zz,vvvv,wwww,yyyy,zzzz	N	Wilkins 950XL 3/4" (VU)
DCDA	Wilkins	950DA	4	H	9-Jun-1993	9-Jun-2014	N	8	hh,ff,mm,uu,zz,vvvv,wwww,yyyy,zzzz	Y	Wilkins 950XL 3/4" (H), Wilkins 950 3/4" (H)
DCDA	Wilkins	950DA	4	VU	12-Dec-1996	12-Dec-2014	N	8	hh,ff,mm,uu,zz,vvvv,wwww,yyyy,zzzz	Y	Wilkins 950XL 3/4" (VU)
DCDA	Wilkins	950DA	6	H	9-Jun-1993	9-Jun-2014	N	8	hh,ff,mm,uu,zz,vvvv,wwww,yyyy,zzzz	Y	Wilkins 950XL 3/4" (H), Wilkins 950 3/4" (H)
DCDA	Wilkins	950DA	6	VU	12-Dec-1996	12-Dec-2014	N	8	hh,ff,mm,uu,zz,vvvv,wwww,yyyy,zzzz	Y	Wilkins 950XL 3/4" (VU)
DCDA	Wilkins	950DA	8	H	9-Jun-1993	9-Jun-2014	N	8	(hh),ff,mm,uu,zz,vvvv,wwww,yyyy,zzzz	N	Wilkins 950XL 3/4" (H), Wilkins 950 3/4" (H)
DCDA	Wilkins	950DA	8	VU	12-Dec-1996	12-Dec-2014	N	8	(hh),ff,mm,uu,zz,vvvv,wwww,yyyy,zzzz	N	Wilkins 950XL 3/4" (VU)
DCDA	Wilkins	950DA	10	H	23-Jun-1994	23-Jun-2015	N	8	(hh),ff,mm,uu,zz,vvvv,wwww,yyyy,zzzz	N	Wilkins 950XL 3/4" (H), Wilkins 950 3/4" (H)
DCDA	Wilkins	950XLTDA	2	H	19-May-2009	19-May-2015	N	9	(bbb)	N	Wilkins 350D 3/4" (H)
DCDA	Wilkins	950XLTDA	2	VU	22-Jun-2009	22-Jun-2015	N	9	(bbb)	N	Wilkins 350D 3/4" (VU)
DCDA	Wilkins	950XLTDABF	2	H	19-May-2009	19-May-2015	N	9	(bbbbb), ccccc	N	Wilkins 350D 3/4" (H)
DCDA	Wilkins	950XLTDABF	2	VU	22-Jun-2009	22-Jun-2015	N	9	(bbbbb), ccccc	N	Wilkins 350D 3/4" (VU)
DCDA	Wilkins	DCDA	2 1/2	H	5-Mar-1987	5-Mar-2014	N	7	hh,ff,mm,uu,zz	Y	Wilkins 550A 3/4" (H)
DCDA	Wilkins	DCDA	3	H	5-Mar-1987	5-Mar-2014	N	7	hh,ff,mm,uu,zz	Y	Wilkins 550A 3/4" (H)
DCDA	Wilkins	DCDA	4	H	18-May-1988	18-May-2015	N	7	hh,ff,mm,uu,zz	Y	Wilkins 550A 3/4" (H)
DCDA	Wilkins	DCDA	6	H	2-Jun-1988	1-Jun-2015	N	7	hh,ff,mm,uu,zz	Y	Wilkins 550A 3/4" (H)
DCDA-I	Backflow Direct	Deringer 30	2 1/2	H	21-Dec-2015		Y	10	(int)	N	Backflow Direct 1/2" CV(HVD)
DCDA-I	Backflow Direct	Deringer 30	2 1/2	VU	21-Dec-2015		Y	10	(int)	N	Backflow Direct 1/2" CV(VUH)
DCDA-I	Backflow Direct	Deringer 30	3	H	21-Dec-2015		Y	10	(int)	N	Backflow Direct 1/2" CV(HVD)
DCDA-I	Backflow Direct	Deringer 30	3	VU	21-Dec-2015		Y	10	(int)	N	Backflow Direct 1/2" CV(VUH)
DCDA-I	Backflow Direct	Deringer 30	4	H	30-Sep-2015		Y	10	(int)	N	Backflow Direct 1/2" CV(HVD)
DCDA-I	Backflow Direct	Deringer 30	4	VU	30-Sep-2015		Y	10	(int)	N	Backflow Direct 1/2" CV(VUH)
DCDA-I	Febco	LF856	2 1/2	H	20-Mar-2015		Y	10	(mm), II	N	Watts 3/4" LF619 (H)
DCDA-I	Febco	LF856	2 1/2	VU	20-Mar-2015		Y	10	(mm), II	N	Watts 3/4" LF619 (HVU)
DCDA-I	Febco	LF856	3	H	20-Mar-2015		Y	10	(mm), II	N	Watts 3/4" LF619 (H)
DCDA-I	Febco	LF856	3	VU	20-Mar-2015		Y	10	(mm), II	N	Watts 3/4" LF619 (HVU)
DCDA-I	Febco	LF856	4	H	26-Jan-2015		Y	10	(mm), II	N	Watts 3/4" LF619 (H)
DCDA-I	Febco	LF856	4	VU	26-Jan-2015		Y	10	(mm), II	N	Watts 3/4" LF619 (HVU)
DCDA-I	Febco	LF856	6	H	13-Mar-2015		Y	10	(mm), II	N	Watts 3/4" LF619 (H)
DCDA-I	Febco	LF856	6	VU	13-Mar-2015		Y	10	(mm), II	N	Watts 3/4" LF619 (HVU)
DCDA-I	Febco	LF856	8	H	7-Jul-2015		Y	10	(mm), II	N	Watts 3/4" LF619 (H)
DCDA-I	Febco	LF856	8	VU	7-Jul-2015		Y	10	(mm), II	N	Watts 3/4" LF619 (HVU)
DCDA-I	Febco	LF856	10	H	7-Jul-2015		Y	10	(mm), II	N	Watts 3/4" LF619 (H)
DCDA-I	Febco	LF856	10	VU	7-Jul-2015		Y	10	(mm), II	N	Watts 3/4" LF619 (HVU)
DCDA-I	Febco	LF866	2 1/2	VUVD	20-Mar-2015		Y	10	(mm), II	N	Watts 3/4" LF619 (HVU)
DCDA-I	Febco	LF876V	2 1/2	VUVU	20-Mar-2015		Y	10	(mm), II	N	Watts 3/4" LF619 (HVD)
DCDA-I	Febco	LF876V	3	VUVD	20-Mar-2015		Y	10	(mm), II	N	Watts 3/4" LF619 (HVU)
DCDA-I	Febco	LF876V	3	VUVU	20-Mar-2015		Y	10	(mm), II	N	Watts 3/4" LF619 (HVD)
DCDA-I	Febco	LF876V	4	VUVD	26-Jan-2015		Y	10	(mm), II	N	Watts 3/4" LF619 (HVU)
DCDA-I	Febco	LF876V	4	VUVU	26-Jan-2015		Y	10	(mm), II	N	Watts 3/4" LF619 (HVD)
DCDA-I	Febco	LF876V	6	VUVD	26-Jan-2015		Y	10	(mm), II	N	Watts 3/4" LF619 (HVU)
DCDA-I	Febco	LF876V	6	VUVU	26-Jan-2015		Y	10	(mm), II	N	Watts 3/4" LF619 (HVD)
DCDA-I	Febco	LF876V	8	VUVD	7-Jul-2015		Y	10	(mm), II	N	Watts 3/4" LF619 (HVU)
DCDA-I	Febco	LF876V	8	VUVU	7-Jul-2015		Y	10	(mm), II	N	Watts 3/4" LF619 (HVD)
PVB	Ames	A200	3/4	VUH	6-Apr-1993	6-Apr-2014	N	8	(vv),xx,ooo,hhhh,pppp	N	
PVB	Ames	A200	1	VUH	25-May-1993	25-May-2014	N	8	(vv),xx,ooo,hhhh,pppp	N	
PVB	Ames	A200	1 1/2	VUH	21-Jun-1993	21-Jun-2014	N	8	(vv),xx,ooo,hhhh,pppp	N	
PVB	Ames	A200	2	VUH	21-Jun-1993	21-Jun-2014	N	8	(vv),xx,ooo,hhhh,pppp	N	
PVB	Apollo/Conbraco	4050302	1/2	VUH	6-Sep-1991	6-Sep-2015	N	8	dd	Y	
PVB	Apollo/Conbraco	4050402	3/4	VUH	6-Sep-1991	6-Sep-2015	N	8	(dd)	Y	
PVB	Apollo/Conbraco	4050502	1	VUH	6-Sep-1991	6-Sep-2015	N	8	(dd)	Y	
PVB	Apollo/Conbraco	4050602	1 1/4	VUH	1-Dec-1993	1-Dec-2014	N	8	(dd)	Y	

Type	Manufacturer	Model	Size	Orientation(s)	Approved	Renewed	≤0.25% Pb	Manual	Shutoffs	Spare Parts	Bypass
PVB	Apollo/Conbraco	4050702	1 1/2	VUH	1-Dec-1993	1-Dec-2014	N	8	(dd)	Y	
PVB	Apollo/Conbraco	4050802	2	VUH	1-Dec-1993	1-Dec-2014	N	8	(dd)	Y	
PVB	Apollo/Conbraco	PVB	1/2								
PVB	Apollo/Conbraco	PVB	3/4								
PVB	Apollo/Conbraco	PVB	1								
PVB	Apollo/Conbraco	PVB	1 1/4								
PVB	Apollo/Conbraco	PVB	1 1/2								
PVB	Apollo/Conbraco	PVB	2								
PVB	Apollo/Conbraco	PVB4A	1/2	VUH	18-Nov-2010	18-Nov-2013	N	9	(iiiii),sssss	N	
PVB	Apollo/Conbraco	PVB4A	3/4	VUH	18-Nov-2010	18-Nov-2013	N	9	(iiiii),sssss	N	
PVB	Apollo/Conbraco	PVB4A	1	VUH	18-Nov-2010	18-Nov-2013	N	9	(iiiii),sssss	N	
PVB	Apollo/Conbraco	PVB4A	1 1/4	VUH	27-Apr-2011	27-Apr-2014	N	9	(iiiii),sssss	N	
PVB	Apollo/Conbraco	PVB4A	1 1/2	VUH	27-Apr-2011	27-Apr-2014	N	9	(iiiii),sssss	N	
PVB	Apollo/Conbraco	PVB4A	2	VUH	30-Jan-2012	30-Jan-2015	N	9	(iiiii),sssss	N	
PVB	Apollo/Conbraco	PVB4V	1/2	VUH	23-Sep-1999	23-Sep-2014	N	9	(dd)	Y	
PVB	Apollo/Conbraco	PVB4V	3/4	VUH	23-Sep-1999	23-Sep-2014	N	9	(dd)	Y	
PVB	Apollo/Conbraco	PVB4V	1	VUH	23-Sep-1999	23-Sep-2014	N	9	(dd)	Y	
PVB	Apollo/Conbraco	PVB4V	1 1/4	VUH	7-Oct-2002	7-Oct-2014	N	9	(dd)	Y	
PVB	Apollo/Conbraco	PVB4V	1 1/2	VUH	7-Oct-2002	7-Oct-2014	N	9	(dd)	Y	
PVB	Apollo/Conbraco	PVB4V	2	VUH	18-Jun-2003	18-Jun-2015	N	9	(dd)	Y	
PVB	Conbraco						N				
PVB	Febco	765	1/2	VUH	26-Mar-1974	1-Jul-2013	N	5	(ii),fff,jjj,ooo	N	
PVB	Febco	765	3/4	VUH	26-Mar-1974	1-Jul-2013	N	5	(ii),fff,jjj,ooo,xxx	N	
PVB	Febco	765	1	VUH	26-Mar-1974	1-Jul-2013	N	5	(ii),fff,jjj,ooo,xxx	N	
PVB	Febco	765	1 1/4	VUH	26-Mar-1974	1-Jul-2013	N	5	(ii),fff,jjj,ooo	N	
PVB	Febco	765	1 1/2	VUH	26-Mar-1974	1-Jul-2013	N	5	(ii),fff,jjj,ooo,xxx	N	
PVB	Febco	765	2	VUH	26-Mar-1974	1-Jul-2013	N	5	(ii),fff,ooo,xxx	N	
PVB	Febco	767-FR	1/2	VUH	1-Aug-2006	1-Aug-2015	N	9	(vv), xx,pppp,rrrrr	N	
PVB	Febco	767-FR	3/4	VUH	1-Aug-2006	1-Aug-2015	N	9	(vv), xx,pppp,rrrrr	N	
PVB	Febco	767-FR	1	VUH	1-Aug-2006	1-Aug-2015	N	9	(vv), xx,pppp,rrrrr	N	
PVB	Febco	767-FR	1 1/4	VUH	1-Aug-2006	1-Aug-2015	N	9	(vv), xx,pppp,rrrrr	N	
PVB	Febco	767-FR	1 1/2	VUH	1-Aug-2006	1-Aug-2015	N	9	(vv), xx,pppp,rrrrr	N	
PVB	Febco	767-FR	2	VUH	1-Aug-2006	1-Aug-2015	N	9	(vv), xx,pppp,rrrrr	N	
PVB	Febco	LF767FR	1/2	VUH	4-May-2010	4-May-2013	Y	9	(hhhh),rrrrr	N	
PVB	Febco	LF767FR	3/4	VUH	4-May-2010	4-May-2013	Y	9	(hhhh),rrrrr	N	
PVB	Febco	LF767FR	1	VUH	4-May-2010	4-May-2013	Y	9	(hhhh),rrrrr	N	
PVB	Febco	LF767FR	1 1/4	VUH	4-May-2010	4-May-2013	Y	9	(hhhh),rrrrr	N	
PVB	Febco	LF767FR	1 1/2	VUH	4-May-2010	4-May-2013	Y	9	(hhhh),rrrrr	N	
PVB	Febco	LF767FR	2	VUH	4-May-2010	4-May-2013	Y	9	(hhhh),rrrrr	N	
PVB	Flomatic	PVB	3/4	VUH	21-Nov-1997	21-Nov-2015	N	9	(ii)	Y	
PVB	Flomatic	PVB	1	VUH	21-Nov-1997	21-Nov-2015	N	9	(ii)	Y	
PVB	Neptune						N				
PVB	Watts	800CMQT	1/2	VUH	18-Jul-1989	18-Jul-2013	N	8	vv,xx,ooo,hhhh,pppp	Y	
PVB	Watts	800CMQT	3/4	VUH	18-Jul-1989	18-Jul-2013	N	8	vv,xx,ooo,hhhh,pppp	Y	
PVB	Watts	800M2QT	1/2	VUH	9-Jul-1991	9-Jul-2015	N	8	vv,xx,ooo,hhhh,pppp	Y	
PVB	Watts	800M2QT	3/4	VUH	9-Jul-1991	9-Jul-2015	N	8	vv,xx,ooo,hhhh,pppp	Y	
PVB	Watts	800M2QT	1	VUH	9-Jul-1991	9-Jul-2015	N	8	vv,xx,ooo,hhhh,pppp	Y	
PVB	Watts	800M2QT	1 1/4	VUH	25-Mar-1993	25-Mar-2014	N	8	vv,xx,ooo,hhhh,pppp	Y	
PVB	Watts	800M2QT	1 1/2	VUH	25-Mar-1993	25-Mar-2014	N	8	vv,xx,ooo,hhhh,pppp	Y	
PVB	Watts	800M2QT	2	VUH	25-Mar-1993	25-Mar-2014	N	8	vv,xx,ooo,hhhh,pppp	Y	
PVB	Watts	800M3QT	1/2	VUH	24-Feb-1992	24-Feb-2016	N	8	vv,xx,ooo,hhhh,pppp	Y	
PVB	Watts	800M3QT	3/4	VUH	24-Feb-1992	24-Feb-2016	N	8	vv,xx,ooo,hhhh,pppp	Y	
PVB	Watts	800M4FR	1/2	VUH	12-May-1998	12-May-2013	N	9	(vv),xx,ooo,hhhh,pppp,rrrrr	N	
PVB	Watts	800M4FR	3/4	VUH	12-May-1998	12-May-2013	N	9	(vv),xx,ooo,hhhh,pppp,rrrrr	N	
PVB	Watts	800M4FR	1	VUH	1-Sep-1995	1-Sep-2013	N	9	(vv),xx,ooo,hhhh,pppp,rrrrr	N	
PVB	Watts	800M4FR	1 1/4	VUH	13-May-1997	13-May-2015	N	9	(vv),xx,ooo,hhhh,pppp,rrrrr	N	
PVB	Watts	800M4FR	1 1/2	VUH	13-May-1997	13-May-2015	N	9	(vv),xx,ooo,hhhh,pppp,rrrrr	N	
PVB	Watts	800M4FR	2	VUH	13-May-1997	13-May-2015	N	9	(vv),xx,ooo,hhhh,pppp,rrrrr	N	
PVB	Watts	800M4QT	1/2	VUH	6-Sep-1993	6-Sep-2014	N	8	(vv),xx,ooo,hhhh,pppp,rrrrr	N	
PVB	Watts	800M4QT	3/4	VUH	6-Apr-1993	6-Apr-2014	N	8	(vv),xx,ooo,hhhh,pppp,rrrrr	N	
PVB	Watts	800M4QT	1	VUH	25-May-1993	25-May-2014	N	8	(vv),xx,ooo,hhhh,pppp,rrrrr	N	
PVB	Watts	800M4QT	1 1/4	VUH	24-May-1994	24-May-2015	N	8	(vv),xx,ooo,hhhh,pppp,rrrrr	N	
PVB	Watts	800M4QT	1 1/2	VUH	21-Jun-1993	21-Jun-2014	N	8	(vv),xx,ooo,hhhh,pppp,rrrrr	N	
PVB	Watts	800M4QT	2	VUH	21-Jun-1993	21-Jun-2014	N	8	(vv),xx,ooo,hhhh,pppp,rrrrr	N	
PVB	Watts	800MQT	1/2	VUH	18-Jul-1989	18-Jul-2013	N	8	vv,xx,ooo,hhhh,pppp	Y	
PVB	Watts	800MQT	3/4	VUH	18-Jul-1989	18-Jul-2013	N	8	vv,xx,ooo,hhhh,pppp	Y	
PVB	Watts	800QT	3/4	VUH	14-Feb-1978	14-Feb-2014	N	5	vv,xx,ooo,hhhh,pppp	Y	
PVB	Watts	800QT	1	VUH	14-Feb-1978	14-Feb-2014	N	5	vv,xx,ooo,hhhh,pppp	Y	
PVB	Watts	800QT	1 1/4	VUH	14-Feb-1978	14-Feb-2014	N	5	vv,xx,ooo,hhhh,pppp	Y	
PVB	Watts	800QT	1 1/2	VUH	14-Feb-1978	14-Feb-2014	N	5	vv,xx,ooo,hhhh,pppp	Y	
PVB	Watts	800QT	2	VUH	14-Feb-1978	14-Feb-2014	N	5	vv,xx,ooo,hhhh,pppp	Y	
PVB	Watts	LF800M4FR	1/2	VUH	12-Jan-2010	12-Jan-2016	Y	9	(hhhh),rrrrr	N	
PVB	Watts	LF800M4FR	3/4	VUH	12-Jan-2010	12-Jan-2016	Y	9	(hhhh),rrrrr	N	
PVB	Watts	LF800M4FR	1	VUH	5-Dec-2014		Y	9	(hhhh),rrrrr	N	
PVB	Watts	LF800M4FR	1 1/4	VUH	12-Jan-2010	12-Jan-2016	Y	9	(hhhh),rrrrr	N	
PVB	Watts	LF800M4FR	1 1/2	VUH	12-Jan-2010	12-Jan-2016	Y	9	(hhhh),rrrrr	N	
PVB	Watts	LF800M4FR	2	VUH	12-Jan-2010	12-Jan-2016	Y	9	(hhhh),rrrrr	N	
PVB	Watts	LF800M4QT	1/2	VUH	12-Jan-2010	12-Jan-2016	Y	9	(hhhh),rrrrr	N	
PVB	Watts	LF800M4QT	3/4	VUH	12-Jan-2010	12-Jan-2016	Y	9	(hhhh),rrrrr	N	
PVB	Watts	LF800M4QT	1	VUH	5-Dec-2014		Y	9	(hhhh),rrrrr	N	
PVB	Watts	LF800M4QT	1 1/4	VUH	12-Jan-2010	12-Jan-2016	Y	9	(hhhh),rrrrr	N	
PVB	Watts	LF800M4QT	1 1/2	VUH	12-Jan-2010	12-Jan-2016	Y	9	(hhhh),rrrrr	N	
PVB	Watts	LF800M4QT	2	VUH	12-Jan-2010	12-Jan-2016	Y	9	(hhhh),rrrrr	N	
PVB	Wilkins	420	1/2	VUH	17-Jul-1999	17-Jul-2014	N	9	(ii),ooo	N	
PVB	Wilkins	420	3/4	VUH	17-Jul-1999	17-Jul-2014	N	9	(ii),ooo	N	
PVB	Wilkins	420	1	VUH	29-Sep-2000	29-Sep-2015	N	9	(ii),ooo	N	
PVB	Wilkins	420XL	1/2	VUH	21-Mar-2011	21-Mar-2014	Y	9	(iiii)	N	
PVB	Wilkins	420XL	3/4	VUH	21-Mar-2011	21-Mar-2014	Y	9	(iiii)	N	
PVB	Wilkins	420XL	1	VUH	3-Aug-2011	3-Aug-2014	Y	9	(iiii)	Y	
PVB	Wilkins	720A	1/2	VUH	28-Aug-1978	28-Aug-2014	N	5	(ii),ooo	N	
PVB	Wilkins	720A	3/4	VUH	28-Aug-1978	28-Aug-2014	N	5	(ii),ooo	N	
PVB	Wilkins	720A	1	VUH	28-Aug-1978	28-Aug-2014	N	5	(ii),ooo	N	
PVB	Wilkins	720A	1 1/4	VUH	28-Aug-1978	28-Aug-2014	N	5	(ii),ooo	N	
PVB	Wilkins	720A	1 1/2	VUH	28-Aug-1978	28-Aug-2014	N	5	(ii),ooo	N	
PVB	Wilkins	720A	2	VUH	28-Aug-1978	28-Aug-2014	N	5	(ii),ooo	N	
RP	Ames	4000B	1/2	H	10-Sep-1996	10-Sep-2014	N	9	(vv),xx,ooo,hhhh,pppp,rrrrr	N	
RP	Ames	4000B	3/4	H	31-Oct-1992	31-Oct-2013	N	8	(vv),xx,ooo,hhhh,pppp,rrrrr	N	
RP	Ames	4000B	1	H	11-Jan-1988	11-Jan-2015	N	7	(vv),xx,ooo,hhhh,pppp,rrrrr	N	
RP	Ames	4000B	1 1/4	H	24-Aug-1993	24-Aug-2014	N	8	(vv),xx,ooo,hhhh,pppp,rrrrr	N	
RP	Ames	4000B	1 1/2	H	24-Aug-1993	24-Aug-2014	N	8	(vv),xx,ooo,hhhh,pppp,rrrrr	N	
RP	Ames	4000B	2	H	10-Sep-1996	10-Sep-2014	N	9	(vv),xx,ooo,hhhh,pppp,rrrrr	N	
RP	Ames	4000B-FP	3/4	H	1-Sep-2009	1-Sep-2015	N	9	(eeeee)	N	
RP	Ames	4000B-FP	1	H	1-Sep-2009	1-Sep-2015	N	9	(eeeee)	N	
RP	Ames	4000B-FP	1 1/4	H	1-Sep-2009	1-Sep-2015	N	9	(eeeee)	N	
RP	Ames	4000B-FP	1 1/2	H	1-Sep-2009	1-Sep-2015	N	9	(eeeee)	N	
RP	Ames	4000B-FP	2	H	1-Sep-2009	1-Sep-2015	N	9	(eeeee)	N	
RP	Ames	4000BM2	1	H	18-May-1998	18-May-2013	N	9	(vv),xx,ooo,hhhh,pppp,rrrrr	N	
RP	Ames	4000BM2-FP	1	H	1-Sep-2009	1-Sep-2015	N	9	(eeeee)	N	
RP	Ames	4000BM3	3/4	H	27-Mar-2000	27-Mar-2015	N	9	(vv),xx,ooo,hhhh,pppp,rrrrr	N	
RP	Ames	4000BM3-FP	3/4	H	1-Sep-2009	1-Sep-2015	N	9	(eeeee)	N	
RP	Ames	4000CIV	2 1/2	H	7-Jul-2000	7-Jul-2015	N	7	(oo),gg,hh,ll,mm,pp,tt,uu	N	
RP	Ames	4000CIV	3	H	7-Jul-2000	7-Jul-2015	N	7	(oo),gg,hh,ll,mm,pp,tt,uu	N	
RP	Ames	4000CIV	4	H	19-Jun-2000	19-Jun-2015	N	6	(oo),gg,hh,ll,mm,pp,tt,uu,eee	N	
RP	Ames	4000CIV	6	H	19-Jun-2000	19-Jun-2015	N	6	(oo),gg,hh,ll,mm,pp,tt,uu,eee	N	
RP	Ames	4000CIV	8	H	19-Jun-2000	19-Jun-2015	N	8	(oo),gg,hh,ll,mm,pp,tt,uu	N	
RP	Ames	4000CIV	10	H	19-Jun-2000	19-Jun-2015	N	8	(oo),gg,hh,ll,mm,pp,tt,uu	N	
RP	Ames	4000RP	4	H	13-Oct-1987	13-Oct-2014	N	7	(tt),ee,ff,gg,hh,ll,mm,oo,pp,uu,ccc,ddd,ffff,gggg	N	
RP	Ames	4000RP	6	H	13-Oct-1987	13-Oct-2014	N	7	(tt),ee,ff,gg,hh,ll,mm,oo,pp,uu,ccc,ddd,ffff,gggg	N	
RP	Ames	4000RP	8	H	13-Oct-1987	13-Oct-2014	N	7	(tt),ee,ff,gg,hh,ll,mm,oo,pp,uu,ccc,ddd,ffff,gggg	N	
RP	Ames	4000RP	10	H	13-Oct-1987	13-Oct-2014	N	7	(tt),ee,ff,gg,hh,ll,mm,oo,pp,uu,ccc,ddd,ffff,gggg	N	
RP	Ames	4000SS	2 1/2	H	15-Apr-1994	15-Apr-2015	N	8	(tt),ee,ff,gg,hh,pp,uu,ccc,ddd	N	
RP	Ames	4000SS	2 1/2	H	15-Apr-1994	15-Apr-2015	Y	8	ll,mm,oo,fff,gggg	N	
RP	Ames	4000SS	3	H	15-Apr-1994	15-Apr-2015	N	8	(tt),ee,ff,gg,hh,pp,uu,ccc,ddd	N	
RP	Ames	4000SS	3	H	15-Apr-1994	15-Apr-2015	Y	8	ll,mm,oo,fff,gggg	N	
RP	Ames	4000SS	4	H	15-Apr-1994	15-Apr-2015	N	8	(tt),ee,ff,gg,hh,pp,uu,ccc,ddd	N	

Type	Manufacturer	Model	Size	Orientation(s)	Approved	Renewed	≤0.25% Pb	Manual	Shutoffs	Spare Parts	Bypass
RP	Ames	4000SS	4	H	15-Apr-1994	15-Apr-2015	Y	8	ll,mm,oo,ffff,gggg	N	
RP	Ames	4000SS	6	H	22-Sep-1997	22-Sep-2015	N	8	(tt),ee,ff,gg,hh,pp,uu,ccc,ddd	N	
RP	Ames	4000SS	6	H	22-Sep-1997	22-Sep-2015	Y	8	ll,mm,oo,ffff,gggg	N	
RP	Ames	400B	3/4	H	20-Jun-2006	20-Jun-2015	N	9	(vv),xx,ooo,hhhh,pppp,rrrrr	N	
RP	Ames	400B	3/4	VD	30-Aug-2006	30-Aug-2015	N	9	(vv),xx,ooo,hhhh,pppp,rrrrr	N	
RP	Ames	400B	1	H	20-Jun-2006	20-Jun-2015	N	9	(vv),xx,ooo,hhhh,pppp,rrrrr	N	
RP	Ames	400B	1	VD	30-Aug-2006	30-Aug-2015	N	9	(vv),xx,ooo,hhhh,pppp,rrrrr	N	
RP	Ames	400B	1 1/4	H	20-Jun-2006	20-Jun-2015	N	9	(vv),xx,ooo,hhhh,pppp,rrrrr	N	
RP	Ames	400B	1 1/4	VD	30-Aug-2006	30-Aug-2015	N	9	(vv),xx,ooo,hhhh,pppp,rrrrr	N	
RP	Ames	400B	1 1/2	H	20-Jun-2006	20-Jun-2015	N	9	(vv),xx,ooo,hhhh,pppp,rrrrr	N	
RP	Ames	400B	1 1/2	VD	30-Aug-2006	30-Aug-2015	N	9	(vv),xx,ooo,hhhh,pppp,rrrrr	N	
RP	Ames	400B	2	H	20-Jun-2006	20-Jun-2015	N	9	(vv),xx,ooo,hhhh,pppp,rrrrr	N	
RP	Ames	400B	2	VD	30-Aug-2006	30-Aug-2015	N	9	(vv),xx,ooo,hhhh,pppp,rrrrr	N	
RP	Ames	400B-A	3/4	VUVD	20-Jun-2006	20-Jun-2015	N	9	(vv),xx,ooo,hhhh,pppp,rrrrr	N	
RP	Ames	400B-A	1	VUVD	20-Jun-2006	20-Jun-2015	N	9	(vv),xx,ooo,hhhh,pppp,rrrrr	N	
RP	Ames	400B-A	1 1/4	VUVD	5-Sep-2006	5-Sep-2015	N	9	(vv),xx,ooo,hhhh,pppp,rrrrr	N	
RP	Ames	400B-A	1 1/2	VUVD	20-Jun-2006	20-Jun-2015	N	9	(vv),xx,ooo,hhhh,pppp,rrrrr	N	
RP	Ames	400B-A	2	VUVD	20-Jun-2006	20-Jun-2015	N	9	(vv),xx,ooo,hhhh,pppp,rrrrr	N	
RP	Ames	400B-Z	3/4	VUVU	20-Jun-2006	20-Jun-2015	N	9	(vv),xx,ooo,hhhh,pppp,rrrrr	N	
RP	Ames	400B-Z	1	VUVU	20-Jun-2006	20-Jun-2015	N	9	(vv),xx,ooo,hhhh,pppp,rrrrr	N	
RP	Ames	400B-Z	1 1/4	VUVU	20-Jun-2006	20-Jun-2015	N	9	(vv),xx,ooo,hhhh,pppp,rrrrr	N	
RP	Ames	400B-Z	1 1/2	VUVU	20-Jun-2006	20-Jun-2015	N	9	(vv),xx,ooo,hhhh,pppp,rrrrr	N	
RP	Ames	400B-Z	2	VUVU	20-Jun-2006	20-Jun-2015	N	9	(vv),xx,ooo,hhhh,pppp,rrrrr	N	
RP	Ames	Colt 400	2 1/2	H	7-Oct-2002	7-Oct-2014	N	9	(ppp),qqq,aaaa,bbbb,nnnnn	N	
RP	Ames	Colt 400	2 1/2	H	7-Oct-2002	7-Oct-2014	Y	9	zzz,dddd,eeee,gggg,kkkk,llll,mmmm,nnnn	N	
RP	Ames	Colt 400	3	H	7-Oct-2002	7-Oct-2014	N	9	(ppp),qqq,aaaa,bbbb,nnnnn	N	
RP	Ames	Colt 400	3	H	7-Oct-2002	7-Oct-2014	Y	9	zzz,dddd,eeee,gggg,kkkk,llll,mmmm,nnnn	N	
RP	Ames	Colt 400	4	H	7-Oct-2002	7-Oct-2014	N	9	(ppp),qqq,aaaa,bbbb,nnnnn	N	
RP	Ames	Colt 400	4	H	7-Oct-2002	7-Oct-2014	Y	9	zzz,dddd,eeee,gggg,kkkk,llll,mmmm,nnnn	N	
RP	Ames	Colt 400	6	H	29-Sep-2004	29-Sep-2013	N	9	(ppp),qqq,aaaa,bbbb,nnnnn	N	
RP	Ames	Colt 400	6	H	29-Sep-2004	29-Sep-2013	Y	9	zzz,dddd,eeee,gggg,kkkk,llll,mmmm,nnnn	N	
RP	Ames	Colt 400	8	H	13-Aug-2007	13-Aug-2013	N	9	(ppp),qqq,aaaa,bbbb,nnnnn	N	
AVB	Watts	288AM5	3/4	VUH	1-Nov-1991	1-Nov-2015	N	8		N	
AVB	Watts	288AM5	1	VUH	1-Nov-1991	1-Nov-2015	N	8		N	
DC	Ames	2000-DC	10	H	4-Aug-1987	2-Aug-2014	N	7	tt,ee,ff,gg,hh,ll,mm,oo,pp,uu,ccc,ddd,ffff,gggg	Y	
DC	Ames	2000-DCA	4	H	11-Jan-1988	11-Jan-2015	N	7	tt,ee,ff,gg,hh,ll,mm,oo,pp,uu,ccc,ddd,ffff,gggg	Y	
DC	Ames	2000-DCA	6	H	11-Jan-1988	11-Jan-2015	N	7	tt,ee,ff,gg,hh,ll,mm,oo,pp,uu,ccc,ddd,ffff,gggg	Y	
DC	Ames	2000-DCA	8	H	11-Jan-1988	11-Jan-2015	N	7	tt,ee,ff,gg,hh,ll,mm,oo,pp,uu,ccc,ddd,ffff,gggg	Y	
DC	Ames	2000-G-DC	10	H	4-Aug-1987	4-Aug-2014	N	7	tt,ee,ff,gg,hh,ll,mm,oo,pp,uu,ccc,ddd,ffff,gggg	Y	
DC	Ames	2000-G-DCA	4	H	11-Jan-1988	11-Jan-2015	N	7	tt,ee,ff,gg,hh,ll,mm,oo,pp,uu,ccc,ddd,ffff,gggg	Y	
DC	Ames	2000-G-DCA	6	H	11-Jan-1988	11-Jan-2015	N	7	tt,ee,ff,gg,hh,ll,mm,oo,pp,uu,ccc,ddd,ffff,gggg	Y	
DC	Ames	2000-G-DCA	8	H	11-Jan-1988	11-Jan-2015	N	7	tt,ee,ff,gg,hh,ll,mm,oo,pp,uu,ccc,ddd,ffff,gggg	Y	
DC	Ames	2000B	1/2	H	6-Dec-1983	6-Dec-2013	N	8	(vv),xx,ooo,hhhh,pppp,rrrrr	N	
DC	Ames	2000B	1/2	H	16-Jun-1997	16-Jun-2015	N	9	(vv),xx,ooo,hhhh,pppp,rrrrr	N	
DC	Ames	2000B	1/2	VU	16-Jun-1997	16-Jun-2015	N	9	(vv),xx,ooo,hhhh,pppp,rrrrr	N	
DC	Ames	2000B	3/4	H	5-Apr-1993	5-Apr-2014	N	8	(vv),xx,ooo,hhhh,pppp,rrrrr	N	
DC	Ames	2000B	3/4	VU	27-Aug-1996	27-Aug-2014	N	8	(vv),xx,ooo,hhhh,pppp,rrrrr	N	
DC	Ames	2000B	1	H	18-May-1998	18-May-2013	N	9	(vv),xx,ooo,hhhh,pppp,rrrrr	N	
DC	Ames	2000B	1	H	26-Feb-1991	26-Feb-2015	N	8	(vv),xx,ooo,hhhh,pppp,rrrrr	N	
DC	Ames	2000B	1	VU	18-May-1998	18-May-2013	N	9	(vv),xx,ooo,hhhh,pppp,rrrrr	N	
DC	Ames	2000B	1 1/4	H	1-Oct-1996	1-Oct-2014	N	8	(vv),xx,ooo,hhhh,pppp,rrrrr	N	
DC	Ames	2000B	1 1/4	VU	1-Oct-1996	1-Oct-2014	N	8	(vv),xx,ooo,hhhh,pppp,rrrrr	N	
DC	Ames	2000B	1 1/2	H	24-May-1994	24-May-2015	N	8	(vv),xx,ooo,hhhh,pppp,rrrrr	N	
DC	Ames	2000B	1 1/2	VU	11-Mar-1996	11-Mar-2014	N	8	(vv),xx,ooo,hhhh,pppp,rrrrr	N	
DC	Ames	2000B	2	H	30-Jun-1992	30-Jun-2013	N	8	(vv),xx,ooo,hhhh,pppp,rrrrr	N	
DC	Ames	2000B	2	VU	8-Mar-1996	8-Mar-2014	N	8	(vv),xx,ooo,hhhh,pppp,rrrrr	N	
DC	Ames	2000B-FP	3/4	H	1-Sep-2009	1-Sep-2015	N	9	(eeeee)	N	
DC	Ames	2000B-FP	1	H	1-Sep-2009	1-Sep-2015	N	9	(eeeee)	N	
DC	Ames	2000B-FP	1 1/4	H	1-Sep-2009	1-Sep-2015	N	9	(eeeee)	N	
DC	Ames	2000B-FP	1 1/2	H	1-Sep-2009	1-Sep-2015	N	9	(eeeee)	N	
DC	Ames	2000B-FP	2	H	1-Sep-2009	1-Sep-2015	N	9	(eeeee)	N	
DC	Ames	2000BM3	3/4	H	27-Mar-2000	27-Mar-2015	N	9	(vv),xx,ooo,hhhh,pppp,rrrrr	N	
DC	Ames	2000BM3	3/4	VU	27-Mar-2000	27-Mar-2015	N	9	(vv),xx,ooo,hhhh,pppp,rrrrr	N	
DC	Ames	2000BM3-FP	3/4	H	1-Sep-2009	1-Sep-2015	N	9	(eeeee)	N	
DC	Ames	2000CIV	4	H	15-Jan-1982	15-Jan-2015	N	6	(oo),gg,hh,ll,mm,pp,tt,uu,eee	N	
DC	Ames	2000CIV	4	VU	11-Mar-1996	11-Mar-2014	N	8	(oo),gg,hh,ll,mm,pp,tt,uu,eee	N	
DC	Ames	2000CIV	6	H	18-May-1982	18-May-2015	N	6	(oo),gg,hh,ll,mm,pp,tt,uu,eee	N	
DC	Ames	2000CIV	6	VU	5-Dec-1996	5-Dec-2014	N	8	(oo),gg,hh,ll,mm,pp,tt,uu,eee	N	
DC	Ames	2000CIV	8	H	6-Jul-1981	6-Jul-2014	N	6	(oo),gg,hh,ll,mm,pp,tt,uu,eee	N	
DC	Ames	2000CIV	8	VU	5-Dec-1996	5-Dec-2014	N	8	(oo),gg,hh,ll,mm,pp,tt,uu,eee	N	
DC	Ames	2000CIV	10	H	16-Mar-1983	16-Mar-2016	N	6	(oo),gg,hh,ll,mm,pp,tt,uu,eee	N	
DC	Ames	2000CIV	10	VU	5-Dec-1996	5-Dec-2014	N	8	(oo),gg,hh,ll,mm,pp,tt,uu,eee	N	
DC	Ames	2000SE	2 1/2	H	10-Sep-1996	10-Sep-2014	N	8	(mm),ee,ff,gg,hh,ll,mm,oo,pp,tt,uu,ccc,ddd,ffff,gggg	N	
DC	Ames	2000SE	6	H	22-Nov-1993	22-Nov-2014	N	8	tt,ee,ff,gg,hh,ll,mm,oo,pp,uu,ccc,ddd,ffff,gggg	Y	
DC	Ames	2000SE	8	H	9-Sep-1992	9-Sep-2013	N	8	tt,ee,ff,gg,hh,ll,mm,oo,pp,uu,ccc,ddd,ffff,gggg	Y	
DC	Ames	2000SS	3/4	H	5-May-1995	5-May-2013	N	8	ii	Y	
DC	Ames	2000SS	1	H	5-May-1995	5-May-2013	N	8	ii	Y	
DC	Ames	2000SS	1 1/4	H	14-Jul-1995	14-Jul-2013	N	8	ii	Y	
DC	Ames	2000SS	1 1/2	H	13-Oct-1995	13-Oct-2013	N	8	ii	Y	
DC	Ames	2000SS	2	H	13-Oct-1995	13-Oct-2013	N	8	ii	Y	
DC	Ames	2000SS	2 1/2	H	11-Jul-1991	11-Jul-2015	N	8	(tt),ee,ff,gg,hh,pp,uu,ccc,ddd	N	
DC	Ames	2000SS	2 1/2	H	11-Jul-1991	11-Jul-2015	Y	8	ll,mm,oo,ffff,gggg	N	
DC	Ames	2000SS	3	H	11-Jul-1991	11-Jul-2015	N	8	(tt),ee,ff,gg,hh,pp,uu,ccc,ddd	N	
DC	Ames	2000SS	3	H	11-Jul-1991	11-Jul-2015	Y	8	ll,mm,oo,ffff,gggg	N	
DC	Ames	2000SS	4	H	11-Jul-1991	11-Jul-2015	N	8	(tt),ee,ff,gg,hh,pp,uu,ccc,ddd	N	
DC	Ames	2000SS	4	H	11-Jul-1991	11-Jul-2015	Y	8	ll,mm,oo,ffff,gggg	N	
DC	Ames	2000SS	6	H	9-Sep-1992	9-Sep-2013	N	8	(tt),ee,ff,gg,hh,pp,uu,ccc,ddd	N	
DC	Ames	2000SS	6	H	9-Sep-1992	9-Sep-2013	Y	8	ll,mm,oo,ffff,gggg	N	
DC	Ames	2000SS	8	H	16-Sep-1996	16-Sep-2014	N	8	(tt),ee,ff,gg,hh,pp,uu,ccc,ddd	N	
DC	Ames	2000SS	8	H	16-Sep-1996	16-Sep-2014	Y	8	ll,mm,oo,ffff,gggg	N	
DC	Ames	2000SS	10	H	16-Feb-2001	16-Feb-2016	N	8	pp,	N	
DC	Ames	2000SS	10	H	16-Feb-2001	16-Feb-2016	Y	8	(ll),mm,oo	N	
DC	Ames	2000SS	12	H	22-Jul-2009	22-Jul-2015	N	9	pp,	N	
DC	Ames	2000SS	12	H	22-Jul-2009	22-Jul-2015	Y	9	(ll),mm,oo	N	
DC	Ames	2000SS	12	VU	22-Feb-2011	22-Feb-2014	N	9	pp,	N	
DC	Ames	2000SS	12	VU	22-Feb-2011	22-Feb-2014	Y	9	(ll),mm,oo	N	
DC	Ames	2000SS-M	4	H	5-May-1995	5-May-2013	N	8	(tt),ee,ff,gg,hh,ll,mm,oo,pp,uu,ccc,ddd,ffff,gggg	N	
DC	Ames	2000SS-M	6	H	5-May-1995	5-May-2013	N	8	(tt),ee,ff,gg,hh,ll,mm,oo,pp,uu,ccc,ddd,ffff,gggg	N	
DC	Ames	200B	1/2	H	21-Apr-2006	21-Apr-2015	N	9	(vv),xx,ooo,hhhh,pppp,rrrrr	N	
DC	Ames	200B	1/2	VD	21-Apr-2006	21-Apr-2015	N	9	(vv),xx,ooo,hhhh,pppp,rrrrr	N	
DC	Ames	200B	1/2	VU	21-Apr-2006	21-Apr-2015	N	9	(vv),xx,ooo,hhhh,pppp,rrrrr	N	
DC	Ames	200B	3/4	H	21-Apr-2006	21-Apr-2015	N	9	(vv),xx,ooo,hhhh,pppp,rrrrr	N	
DC	Ames	200B	3/4	VD	21-Apr-2006	21-Apr-2015	N	9	(vv),xx,ooo,hhhh,pppp,rrrrr	N	
DC	Ames	200B	3/4	VU	21-Apr-2006	21-Apr-2015	N	9	(vv),xx,ooo,hhhh,pppp,rrrrr	N	
DC	Ames	200B	1	H	21-Apr-2006	21-Apr-2015	N	9	(vv),xx,ooo,hhhh,pppp,rrrrr	N	
DC	Ames	200B	1	VD	21-Apr-2006	21-Apr-2015	N	9	(vv),xx,ooo,hhhh,pppp,rrrrr	N	
DC	Ames	200B	1	VU	21-Apr-2006	21-Apr-2015	N	9	(vv),xx,ooo,hhhh,pppp,rrrrr	N	
DC	Ames	200B	1 1/4	H	21-Apr-2006	21-Apr-2015	N	9	(vv),xx,ooo,hhhh,pppp,rrrrr	N	
DC	Ames	200B	1 1/4	VD	21-Apr-2006	21-Apr-2015	N	9	(vv),xx,ooo,hhhh,pppp,rrrrr	N	
DC	Ames	200B	1 1/4	VU	21-Apr-2006	21-Apr-2015	N	9	(vv),xx,ooo,hhhh,pppp,rrrrr	N	
DC	Ames	200B	1 1/2	H	21-Apr-2006	21-Apr-2015	N	9	(vv),xx,ooo,hhhh,pppp,rrrrr	N	
DC	Ames	200B	1 1/2	VD	21-Apr-2006	21-Apr-2015	N	9	(vv),xx,ooo,hhhh,pppp,rrrrr	N	
DC	Ames	200B	1 1/2	VU	21-Apr-2006	21-Apr-2015	N	9	(vv),xx,ooo,hhhh,pppp,rrrrr	N	
DC	Ames	200B	2	H	21-Apr-2006	21-Apr-2015	N	9	(vv),xx,ooo,hhhh,pppp,rrrrr	N	
DC	Ames	200B	2	VD	21-Apr-2006	21-Apr-2015	N	9	(vv),xx,ooo,hhhh,pppp,rrrrr	N	
DC	Ames	200B	2	VU	21-Apr-2006	21-Apr-2015	N	9	(vv),xx,ooo,hhhh,pppp,rrrrr	N	
DC	Ames	200B R10	1/2	H	21-Apr-2006	21-Apr-2015	N	9	(vv),xx,ooo,hhhh,pppp,rrrrr	N	
DC	Ames	200B R10	1/2	VD	21-Apr-2006	21-Apr-2015	N	9	(vv),xx,ooo,hhhh,pppp,rrrrr	N	
DC	Ames	200B R10	1/2	VU	21-Apr-2006	21-Apr-2015	N	9	(vv),xx,ooo,hhhh,pppp,rrrrr	N	
DC	Ames	200B R10	3/4	H	21-Apr-2006	21-Apr-2015	N	9	(vv),xx,ooo,hhhh,pppp,rrrrr	N	
DC	Ames	200B R10	3/4	VD	21-Apr-2006	21-Apr-2015	N	9	(vv),xx,ooo,hhhh,pppp,rrrrr	N	
DC	Ames	200B R10	3/4	VU	21-Apr-2006	21-Apr-2015	N	9	(vv),xx,ooo,hhhh,pppp,rrrrr	N	
DC	Ames	200B-A	1/2	VUVD	21-Apr-2006	21-Apr-2015	N	9	(vv),xx,ooo,hhhh,pppp,rrrrr	N	
DC	Ames	200B-A	1	VUVD	21-Apr-2006	21-Apr-2015	N	9	(vv),xx,ooo,hhhh,pppp,rrrrr	N	
DC	Ames	200B-A	1 1/4	VUVD	21-Apr-2006	21-Apr-2015	N	9	(vv),xx,ooo,hhhh,pppp,rrrrr	N	

Type	Manufacturer	Model	Size	Orientation(s)	Approved	Renewed	≤0.25% Pb	Manual	Shutoffs	Spare Parts	Bypass
RP	Apollo/Conbraco	4020402	3/4	H	8-May-1989	8-May-2016	N	8	dd	Y	
RP	Apollo/Conbraco	40204A2	3/4	H	27-Nov-1991	27-Nov-2015	N	8	dd	Y	
RP	Apollo/Conbraco	40204A2S	3/4								
RP	Apollo/Conbraco	40204A2U	3/4								
RP	Apollo/Conbraco	40204A2Z	3/4								
RP	Apollo/Conbraco	40204T2	3/4								
RP	Apollo/Conbraco	40204TC2	3/4								
RP	Apollo/Conbraco	40204TCU	3/4	VUVD	30-Nov-1998	22-Nov-2013	N	8	(dd)	Y	
RP	Apollo/Conbraco	4020502	1	H	8-May-1989	8-May-2016	N	8	dd	Y	
RP	Apollo/Conbraco	4020599T	1								
RP	Apollo/Conbraco	40205A2	1	H	27-Nov-1991	27-Nov-2015	N	8	dd	Y	
RP	Apollo/Conbraco	40205A2S	1								
RP	Apollo/Conbraco	40205A2U	1								
RP	Apollo/Conbraco	40205A2Z	1								
RP	Apollo/Conbraco	40205T2	1								
RP	Apollo/Conbraco	40205T2S	1	H	16-Aug-1994	16-Aug-2015	N	8	(uuu)	N	
RP	Apollo/Conbraco	40205T2U	1	VUVD	15-Sep-1993	15-Sep-2014	N	8	(dd)	N	
RP	Apollo/Conbraco	40205T2Z	1	VUVU	15-Sep-1993	15-Sep-2014	N	8	(dd)	N	
RP	Apollo/Conbraco	40205TC2	1								
RP	Apollo/Conbraco	40205TCU	1	VUVD	30-Nov-1998	22-Nov-2013	N	8	(dd)	Y	
RP	Apollo/Conbraco	4020602	1 1/4	H	6-Apr-1992	6-Apr-2016	N	8	dd	Y	
RP	Apollo/Conbraco	4020699T	1 1/4								
RP	Apollo/Conbraco	40206A2	1 1/4	H	21-Jun-1993	21-Jun-2014	N	8	dd	Y	
RP	Apollo/Conbraco	40206A2U	1 1/4								
RP	Apollo/Conbraco	40206A2Z	1 1/4								
RP	Apollo/Conbraco	40206T2	1 1/4								
RP	Apollo/Conbraco	40206T2U	1 1/4								
RP	Apollo/Conbraco	40206T2Z	1 1/4								
RP	Apollo/Conbraco	4020702	1 1/2	H	17-Mar-1989	17-Mar-2016	N	8	dd	Y	
RP	Apollo/Conbraco	4020799T	1 1/2								
RP	Apollo/Conbraco	40207A2	1 1/2	H	16-Sep-1992	16-Sep-2013	N	8	dd	Y	
RP	Apollo/Conbraco	40207A2U	1 1/2								
RP	Apollo/Conbraco	40207A2Z	1 1/2								
RP	Apollo/Conbraco	40207T2	1 1/2								
RP	Apollo/Conbraco	40207T2U	1 1/2								
RP	Apollo/Conbraco	40207T2Z	1 1/2								
RP	Apollo/Conbraco	4020802	2	H	17-Mar-1989	17-Mar-2016	N	8	dd	Y	
RP	Apollo/Conbraco	4020899T	2								
RP	Apollo/Conbraco	40208A2	2	H	16-Sep-1992	16-Sep-2013	N	8	dd	Y	
RP	Apollo/Conbraco	40208A2U	2								
RP	Apollo/Conbraco	40208A4	2	H	24-May-2000	24-May-2015	N	8	rrr	Y	
RP	Apollo/Conbraco	40208AZ2	2								
RP	Apollo/Conbraco	40208T2	2								
RP	Apollo/Conbraco	40208T2U	2								
RP	Apollo/Conbraco	40208T2Z	2								
RP	Apollo/Conbraco	4020902	2 1/2								
RP	Apollo/Conbraco	4020903	2 1/2								
RP	Apollo/Conbraco	4020905	2 1/2								
RP	Apollo/Conbraco	4020A02	4								
RP	Apollo/Conbraco	4020A03	4								
RP	Apollo/Conbraco	4020A05	4								
RP	Apollo/Conbraco	4020C02	6								
RP	Apollo/Conbraco	4020C03	6								
RP	Apollo/Conbraco	4020C05	6								
RP	Apollo/Conbraco	4020E02	8								
RP	Apollo/Conbraco	4020E03	8								
RP	Apollo/Conbraco	4020G02	10								
RP	Apollo/Conbraco	4020G03	10								
RP	Apollo/Conbraco	4D-200	2 1/2	H	11-Mar-2009	11-Mar-2015	N	9	(yyy), cccc, dddd	Y	
RP	Apollo/Conbraco	4D-200	3	H	11-Mar-2009	11-Mar-2015	N	9	(yyy), cccc, dddd	Y	
RP	Apollo/Conbraco	4D-200	4	H	11-Mar-2009	11-Mar-2015	N	9	(yyy), cccc, dddd	Y	
RP	Apollo/Conbraco	4D-200U	2 1/2	VUVD	11-Mar-2009	11-Mar-2015	N	9	(yyy), cccc, dddd	Y	
RP	Apollo/Conbraco	4D-200U	3	VUVD	11-Mar-2009	11-Mar-2015	N	9	(yyy), cccc, dddd	Y	
RP	Apollo/Conbraco	4D-200U	4	VUVD	11-Mar-2009	11-Mar-2015	N	9	(yyy), cccc, dddd	Y	
RP	Apollo/Conbraco	RP40	1/4	H	16-Sep-1998	16-Sep-2013	N	8	(dd)	Y	
RP	Apollo/Conbraco	RP40	3/8	H	16-Sep-1998	16-Sep-2013	N	8	(dd)	Y	
RP	Apollo/Conbraco	RP40	1/2	H	15-Sep-1994	15-Sep-2013	N	8	(dd)	Y	
RP	Apollo/Conbraco	RP40	3/4	H	16-Sep-1998	16-Sep-2013	N	8	(dd)	Y	
RP	Apollo/Conbraco	RP40	1	H	16-Sep-1998	16-Sep-2013	N	8	(dd)	Y	
RP	Apollo/Conbraco	RP40	1 1/4	H	16-Sep-1998	16-Sep-2013	N	8	(dd)	Y	
RP	Apollo/Conbraco	RP40	1 1/2	H	16-Sep-1998	16-Sep-2013	N	8	(dd)	Y	
RP	Apollo/Conbraco	RP40	2	H	16-Sep-1998	16-Sep-2013	N	8	(dd)	Y	
RP	Apollo/Conbraco	RP40	2 1/2	H	8-Apr-1991	8-Apr-2015	N	8	(tt),bb,cc,ee,ll,mm,uu,mmm	Y	
RP	Apollo/Conbraco	RP40	3	H	8-Apr-1991	8-Apr-2015	N	8	(tt),bb,cc,ee,ll,mm,uu,mmm	Y	
RP	Apollo/Conbraco	RP40	4	H	8-Apr-1991	8-Apr-2015	N	8	(tt),bb,cc,ee,ll,mm,uu,mmm	Y	
RP	Apollo/Conbraco	RP40	6	H	8-Apr-1991	8-Apr-2015	N	8	(tt),bb,ee,ll	Y	
RP	Apollo/Conbraco	RP40	8	H	22-Oct-1991	22-Oct-2015	N	8	(tt),bb,cc,ee,ll,mm,uu	Y	
RP	Apollo/Conbraco	RP40	10	H	13-Apr-1993	13-Apr-2014	N	8	(tt),bb,cc,ee,ll,mm,uu	Y	
RP	Apollo/Conbraco	RP40N	3/4	VUVD	6-Nov-1992	6-Nov-2013	N	8	(dd)	Y	
RP	Apollo/Conbraco	RP40N	1 1/4	VUVD	2-Feb-1995	2-Feb-2016	N	8	(dd)	Y	
RP	Apollo/Conbraco	RP40U	1 1/2	VUVD	2-Feb-1995	2-Feb-2016	N	8	(dd)	Y	
RP	Apollo/Conbraco	RP40U	2	VUVD	2-Feb-1995	2-Feb-2016	N	8	(dd)	Y	
RP	Apollo/Conbraco	RP40Z	3/4	VUVU	6-Nov-1992	6-Nov-2013	N	8	(dd)	Y	
RP	Apollo/Conbraco	RP40Z	1 1/4	VUVU	2-Feb-1995	2-Feb-2016	N	8	(dd)	Y	
RP	Apollo/Conbraco	RP40Z	1 1/2	VUVU	2-Feb-1995	2-Feb-2016	N	8	(dd)	Y	
RP	Apollo/Conbraco	RP40Z	2	VUVU	2-Feb-1995	2-Feb-2016	N	8	(dd)	Y	
RP	Apollo/Conbraco	RP4A	1/2	H	29-Nov-2011	29-Oct-2014	N	9	(iiiii),sssss	N	
RP	Apollo/Conbraco	RP4A	3/4	H	14-Jun-2011	14-Jun-2014	N	9	(iiiii),sssss,wwww	N	
RP	Apollo/Conbraco	RP4A	1	H	27-Sep-2011	27-Sep-2014	N	9	(iiiii),sssss,wwww	N	
RP	Apollo/Conbraco	RP4A	1 1/4	H	11-Dec-2013		N	9	(iiiii),sssss,wwww	N	
RP	Apollo/Conbraco	RP4A	1 1/2	H	11-Dec-2013		N	9	(iiiii),sssss,wwww	N	
RP	Apollo/Conbraco	RP4A	2	H	29-Nov-2011	29-Oct-2014	N	9	(iiiii),sssss,wwww	N	
RP	Apollo/Conbraco	RPLF40	1/2	H	18-Nov-2010	18-Nov-2013	Y	9	(jjjjj)	Y	
RP	Apollo/Conbraco	RPLF40	1 1/4	H	18-Nov-2010	18-Nov-2013	Y	9	(jjjjj)	Y	
RP	Apollo/Conbraco	RPLF40	1 1/2	H	18-Nov-2010	18-Nov-2013	Y	9	(jjjjj)	Y	
RP	Apollo/Conbraco	RPLF40	2	H	18-Nov-2010	18-Nov-2013	Y	9	(jjjjj)	Y	
RP	Apollo/Conbraco	RPLF4A	1/2	H	29-Nov-2011	29-Oct-2014	Y	9	(jjjjj),ttttt,uuuuu	N	
RP	Apollo/Conbraco	RPLF4A	3/4	H	14-Jun-2011	14-Jun-2014	Y	9	(jjjjj),ttttt,vvvvv	N	
RP	Apollo/Conbraco	RPLF4A	1	H	27-Sep-2011	27-Sep-2014	Y	9	(jjjjj),ttttt,vvvvv	N	
RP	Apollo/Conbraco	RPLF4A	1 1/4	H	11-Dec-2013		Y	9	(jjjjj),ttttt,vvvvv	N	
RP	Apollo/Conbraco	RPLF4A	1 1/2	H	11-Dec-2013		Y	9	(jjjjj),ttttt,vvvvv	N	
RP	Apollo/Conbraco	RPLF4A	2	H	29-Nov-2011	29-Oct-2014	Y	9	(jjjjj),ttttt,vvvvv	N	
RP	Apollo/Conbraco	RPLF4A	2 1/2	H	25-Feb-2014		Y	10	(yyy), cccc, dddd, mmmm, nnnn, xxxxx, yyyyy, zzzzz, aaaaaa	N	
RP	Apollo/Conbraco	RPLF4A	3	H	25-Feb-2014		Y	10	(yyy), cccc, dddd, mmmm, nnnn, xxxxx, yyyyy, zzzzz, aaaaaa	N	
RP	Apollo/Conbraco	RPLF4A	4	H	24-Jun-2013		Y	10	(yyy), cccc, dddd, mmmm, nnnn, xxxxx, yyyyy, zzzzz, aaaaaa	N	
RP	Apollo/Conbraco	RPLF4A	6	H	24-Jun-2013		Y	10	(yyy), cccc, dddd, mmmm, nnnn, xxxxx, yyyyy, zzzzz, aaaaaa	N	
RP	Apollo/Conbraco	RPLF4AN	2 1/2	VUVD	27-Apr-2015		Y	10	(yyy), cccc, dddd, mmmm, nnnn, xxxxx, yyyyy, zzzzz, aaaaaa	N	
RP	Apollo/Conbraco	RPLF4AN	2 1/2	VUVU	27-Apr-2015		Y	10	(yyy), cccc, dddd, mmmm, nnnn, xxxxx, yyyyy, zzzzz, aaaaaa	N	
RP	Apollo/Conbraco	RPLF4AN	3	VUVD	27-Apr-2015		Y	10	(yyy), cccc, dddd, mmmm, nnnn, xxxxx, yyyyy, zzzzz, aaaaaa	N	
RP	Apollo/Conbraco	RPLF4AN	3	VUVU	27-Apr-2015		Y	10	(yyy), cccc, dddd, mmmm, nnnn, xxxxx, yyyyy, zzzzz, aaaaaa	N	
RP	Apollo/Conbraco	RPLF4AN	4	VUVD	15-May-2014		Y	10	(yyy), cccc, dddd, mmmm, nnnn, xxxxx, yyyyy, zzzzz, aaaaaa	N	
RP	Apollo/Conbraco	RPLF4AR	2 1/2	H	21-Dec-2015		N	10	(cccc), dddd, mmmm, nnnn, xxxxx, yyyyy, zzzzz, aaaaaa	N	
RP	Apollo/Conbraco	RPLF4AR	3	H	21-Dec-2015		N	10	(cccc), dddd, mmmm, nnnn, xxxxx, yyyyy, zzzzz, aaaaaa	N	
RP	Apollo/Conbraco	RPLF4AR	4	H	21-Dec-2015		N	10	(cccc), dddd, mmmm, nnnn, xxxxx, yyyyy, zzzzz, aaaaaa	N	
RP	Apollo/Conbraco	RPLF4AR	6	H	21-Dec-2015		N	10	(cccc), dddd, mmmm, nnnn, xxxxx, yyyyy, zzzzz, aaaaaa	N	
RP	Apollo/Conbraco	RPS40	1/4	H	19-Apr-1996	19-Apr-2014	N	8	(uuu)	N	
RP	Apollo/Conbraco	RPS40	3/8	H	19-Apr-1996	19-Apr-2014	N	8	(uuu)	N	
RP	Apollo/Conbraco	RPS40	1/2	H	19-Apr-1996	19-Apr-2014	N	8	(dd)	N	
RP	Apollo/Conbraco	RPS40	3/4	H	16-Aug-1994	16-Aug-2015	N	8	(uuu)	N	
RP	ARI	RP 500	1/2	H	3-Jan-2013	3-Jan-2016	N	9	(ooooo), ii, ooo	N	
RP	ARI	RP 500	1/2	H	18-Feb-2014		Y	9	(ooooo)	N	
RP	ARI	RP 500	3/4	H	2-Mar-2007	2-Mar-2016	N	9	(ii),ooo, ooooo	N	
RP	ARI	RP 500	3/4	H	18-Feb-2014		Y	9	(ooooo)	N	
RP	ARI	RP 500	1	H	2-Mar-2007	2-Mar-2016	N	9	(ii),ooo, ooooo	N	
RP	ARI	RP 500	1	H	18-Feb-2014		Y	9	(ooooo)	N	

Type	Manufacturer	Model	Size	Orientation(s)	Approved	Renewed	≤0.25% Pb	Manual	Shutoffs	Spare Parts	Bypass
RP	ARI	RP 500	1 1/4	H	18-Feb-2014		Y	10	(ooooo)	N	
RP	ARI	RP 500	1 1/2	H	18-Feb-2014		Y	10	(ooooo)	N	
RP	ARI	RP 500	2	H	18-Feb-2014		Y	10	(ooooo)	N	
RP	Cash Acme	RP 500	3/4	H	19-Apr-2012	19-Apr-2015	Y	9	(ii),ooo	N	
RP	Cash Acme	RP 500	1	H	19-Apr-2012	19-Apr-2015	Y	9	(ii),ooo	N	
RP	Cash Acme	RP100	3/4	H	7-Apr-2009	7-Apr-2015	N	8	(ii)	N	
RP	Cash Acme	RP100	1	H	7-Apr-2009	7-Apr-2015	N	8	(ii)	N	
RP	Cash Acme	RP100	1 1/2	H	7-Apr-2009	7-Apr-2015	N	8	(ii)	N	
RP	Cash Acme	RP100	2	H	7-Apr-2009	7-Apr-2015	N	8	(ii)	N	
RP	Cash Acme	RP200	1/2	H	7-Apr-2009	7-Apr-2015	N	8	(ii)	N	
RP	Cash Acme	RP200	3/4	H	7-Apr-2009	7-Apr-2015	N	8	(ii)	N	
RP	Cla-Val	RP4	8	H	22-Jun-1989	22-Jun-2013	N	8	(gg),hh,qq,rr	Y	
RP	Cla-Val	RP4	10	H	22-Jun-1989	22-Jun-2013	N	8	(gg),hh,qq,rr	Y	
RP	Conbraco						N				
RP	Febco	860	1/2	H	9-Apr-1998	9-Apr-2016	N	9	(fff),ooo	N	
RP	Febco	860	3/4	H	21-Nov-1997	21-Nov-2015	N	9	(fff),jjj,ooo	N	
RP	Febco	860	1	H	21-Nov-1997	21-Nov-2015	N	9	(fff),jjj,ooo	N	
RP	Febco	860	1 1/4	H	4-Jun-1998	4-Jun-2013	N	9	(fff),jjj,ooo	N	
RP	Febco	860	1 1/2	H	9-Apr-1998	9-Apr-2016	N	9	(fff),jjj,ooo	N	
RP	Febco	860	2	H	9-Apr-1998	9-Apr-2016	N	9	(fff),ooo	Y	
RP	Febco	860	2 1/2	H	19-Apr-1996	19-Apr-2014	N	8	(ee),ff,ll,mm,oo,pp,tt,uu.zzz,cccc,ffff,gggg	Y	
RP	Febco	860	3	H	19-Apr-1996	19-Apr-2014	N	8	(ee),ff,ll,mm,oo,pp,tt,uu.zzz,cccc,ffff,gggg	Y	
RP	Febco	860	4	H	31-May-1995	31-May-2013	N	8	(ee),ff,ll,mm,oo,pp,tt,uu,nnn,zzz,cccc,ffff,gggg	Y	
RP	Febco	860	6	H	7-Aug-1995	7-Aug-2013	N	8	(ee),ff,ll,mm,oo,pp,tt,uu,nnn,zzz,cccc,ffff,gggg	Y	
RP	Febco	860	8	H	4-Oct-1995	4-Oct-2013	N	8	(ee),ff,ll,mm,oo,pp,tt,uu,nnn,zzz,cccc,ffff,gggg	Y	
RP	Febco	867	2 1/2	H	1-Aug-2006	1-Aug-2015	N	8	(oo), gg, hh,ll, mm, pp, tt, uu, yy, fff	N	
RP	Febco	867	3	H	1-Aug-2006	1-Aug-2015	N	8	(oo), gg, hh,ll, mm, pp, tt, uu, yy, eee, fff	N	
RP	Febco	880	2 1/2	VUVD	24-May-1995	24-May-2013	N	8	ee,ff,ll,mm,oo,pp,tt,uu,zzz,ffff,gggg	Y	
RP	Febco	880	3	VUVD	24-May-1995	24-May-2013	N	8	ee,ff,ll,mm,oo,pp,tt,uu,zzz,ffff,gggg	Y	
RP	Febco	880	4	VUVD	10-Mar-1995	10-Mar-2016	N	8	ee,ff,ll,mm,oo,pp,tt,uu,zzz,ffff,gggg	Y	
RP	Febco	880	6	VUVD	19-May-1995	19-May-2013	N	8	ee,ff,ll,mm,oo,pp,tt,uu,zzz,ffff,gggg	Y	
RP	Febco	880	8	VUVD	19-May-1995	19-May-2013	N	8	ee,ff,ll,mm,oo,pp,tt,uu,zzz,ffff,gggg	Y	
RP	Febco	880	10	VUVD	4-Oct-1996	4-Oct-2014	N	8	ee,ff,ll,mm,oo,pp,tt,uu,zzz,ffff,gggg	Y	
RP	Febco	760	2 1/2	H	17-Sep-2009	17-Sep-2015	N	9	(ppp),qqq,aaaa,bbbb	N	
RP	Febco	760	2 1/2	H	17-Sep-2009	17-Sep-2015	Y	9	zzz,dddd,eeee,gggg,kkkk,llll,mmmm,nnnn	N	
RP	Febco	760	3	H	17-Sep-2009	17-Sep-2015	N	9	(ppp),qqq,aaaa,bbbb	N	
RP	Febco	760	3	H	17-Sep-2009	17-Sep-2015	Y	9	zzz,dddd,eeee,gggg,kkkk,llll,mmmm,nnnn	N	
RP	Febco	760	4	H	17-Sep-2009	17-Sep-2015	N	9	(ppp),qqq,aaaa,bbbb	N	
RP	Febco	760	4	H	17-Sep-2009	17-Sep-2015	Y	9	zzz,dddd,eeee,gggg,kkkk,llll,mmmm,nnnn	N	
RP	Febco	760	6	H	17-Sep-2009	17-Sep-2015	N	9	(ppp),qqq,aaaa,bbbb	N	
RP	Febco	760	6	H	17-Sep-2009	17-Sep-2015	Y	9	zzz,dddd,eeee,gggg,kkkk,llll,mmmm,nnnn	N	
RP	Febco	760	8	H	17-Sep-2009	17-Sep-2015	N	9	(ppp),qqq,sss,ttt,aaaa,bbbb	N	
RP	Febco	760	8	H	17-Sep-2009	17-Sep-2015	Y	9	zzz,cccc,dddd,eeee,gggg,kkkk,llll,mmmm,nnnn	N	
RP	Febco	760	10	H	17-Sep-2009	17-Sep-2015	N	9	(ppp),qqq,sss,ttt,aaaa,bbbb	N	
RP	Febco	760	10	H	17-Sep-2009	17-Sep-2015	Y	9	zzz,cccc,dddd,eeee,gggg,kkkk,llll,mmmm,nnnn	N	
RP	Febco	760N	2 1/2	VUVD	17-Sep-2009	17-Sep-2015	N	9	(ppp),qqq,aaaa,bbbb	N	
RP	Febco	760N	2 1/2	VUVD	17-Sep-2009	17-Sep-2015	Y	9	zzz,dddd,eeee,gggg,kkkk,llll,mmmm,nnnn	N	
RP	Febco	760N	3	VUVD	17-Sep-2009	17-Sep-2015	N	9	(ppp),qqq,aaaa,bbbb	N	
RP	Febco	760N	3	VUVD	17-Sep-2009	17-Sep-2015	Y	9	zzz,dddd,eeee,gggg,kkkk,llll,mmmm,nnnn	N	
RP	Febco	760N	4	VUVD	17-Sep-2009	17-Sep-2015	N	9	(ppp),qqq,aaaa,bbbb	N	
RP	Febco	760N	4	VUVD	17-Sep-2009	17-Sep-2015	Y	9	zzz,dddd,eeee,gggg,kkkk,llll,mmmm,nnnn	N	
RP	Febco	760Z	2 1/2	VUVU	17-Sep-2009	17-Sep-2015	N	9	(ppp),qqq,aaaa,bbbb	N	
RP	Febco	760Z	2 1/2	VUVU	17-Sep-2009	17-Sep-2015	Y	9	zzz,dddd,eeee,gggg,kkkk,llll,mmmm,nnnn	N	
RP	Febco	760Z	3	VUVU	17-Sep-2009	17-Sep-2015	N	9	(ppp),qqq,aaaa,bbbb	N	
RP	Febco	760Z	3	VUVU	17-Sep-2009	17-Sep-2015	Y	9	zzz,dddd,eeee,gggg,kkkk,llll,mmmm,nnnn	N	
RP	Febco	760Z	4	VUVU	17-Sep-2009	17-Sep-2015	N	9	(ppp),qqq,aaaa,bbbb	N	
RP	Febco	760Z	4	VUVU	17-Sep-2009	17-Sep-2015	Y	9	zzz,dddd,eeee,gggg,kkkk,llll,mmmm,nnnn	N	
RP	Febco	825Y	3/4	H	19-Mar-1982	19-Mar-2015	N	6	(ii),fff,jjj,ooo	N	
RP	Febco	825Y	1	H	19-Mar-1982	19-Mar-2015	N	6	(ii),fff,jjj,ooo	N	
RP	Febco	825Y	1 1/4	H	3-Jun-1982	1-Jun-2015	N	6	ii,fff,jjj,ooo	Y	
RP	Febco	825Y	1 1/2	H	6-Aug-1982	6-Aug-2015	N	6	(ii),fff,jjj,ooo	N	
RP	Febco	825Y	2	H	6-Aug-1982	6-Aug-2015	N	6	(ii),fff,ooo	N	
RP	Febco	825YA	3/4	H	5-Mar-1990	5-Mar-2014	N	8	(ii),fff,jjj,ooo	N	
RP	Febco	825YA	3/4	HVD	5-Mar-1990	5-Mar-2014	N	8	(ii),fff,jjj,ooo	N	
RP	Febco	825YA	3/4	VUH	5-Mar-1990	5-Mar-2014	N	8	(ii),fff,jjj,ooo	N	
RP	Febco	825YA	3/4	VUVD	5-Mar-1990	5-Mar-2014	N	8	(ii),fff,jjj,ooo	N	
RP	Febco	825YA	1	H	5-Mar-1990	5-Mar-2014	N	8	(ii),fff,jjj,ooo	N	
RP	Febco	825YA	1	HVD	5-Mar-1990	5-Mar-2014	N	8	(ii),fff,jjj,ooo	N	
RP	Febco	825YA	1	VUH	5-Mar-1990	5-Mar-2014	N	8	(ii),fff,jjj,ooo	N	
RP	Febco	825YA	1	VUVD	5-Mar-1990	5-Mar-2014	N	8	(ii),fff,jjj,ooo	N	
RP	Febco	825YA	1 1/2	H	8-May-1989	8-May-2013	N	8	(ii),fff,jjj,ooo	N	
RP	Febco	825YA	1 1/2	HVD	8-May-1989	8-May-2013	N	8	(ii),fff,jjj,ooo	N	
RP	Febco	825YA	1 1/2	VUH	8-May-1989	8-May-2013	N	8	(ii),fff,jjj,ooo	N	
RP	Febco	825YA	1 1/2	VUVD	8-May-1989	8-May-2013	N	8	(ii),fff,jjj,ooo	N	
RP	Febco	825YA	2	H	8-May-1989	8-May-2013	N	8	(ii),fff,ooo	N	
RP	Febco	825YA	2	HVD	8-May-1989	8-May-2013	N	8	(ii),fff,ooo	N	
RP	Febco	825YA	2	VUH	8-May-1989	8-May-2013	N	8	(ii),fff,ooo	N	
RP	Febco	825YA	2	VUVD	8-May-1989	8-May-2013	N	8	(ii),fff,ooo	N	
RP	Febco	825YAR	3/4	H	22-Jan-1993	22-Jan-2014	N	8	ii,fff,jjj,ooo	Y	
RP	Febco	825YAR	3/4	HVD	22-Jan-1993	22-Jan-2014	N	8	ii,fff,jjj,ooo	Y	
RP	Febco	825YAR	3/4	VUH	22-Jan-1993	22-Jan-2014	N	8	ii,fff,jjj,ooo	Y	
RP	Febco	825YAR	3/4	VUVD	22-Jan-1993	22-Jan-2014	N	8	ii,fff,jjj,ooo	Y	
RP	Febco	825YAR	1	H	21-Jan-1993	21-Jan-2014	N	8	ii,fff,jjj,ooo	Y	
RP	Febco	825YAR	1	HVD	21-Jan-1993	21-Jan-2014	N	8	ii,fff,jjj,ooo	Y	
RP	Febco	825YAR	1	VUH	21-Jan-1993	21-Jan-2014	N	8	ii,fff,jjj,ooo	Y	
RP	Febco	825YAR	1	VUVD	21-Jan-1993	21-Jan-2014	N	8	ii,fff,jjj,ooo	Y	
RP	Febco	825YAR	1 1/2	H	19-Aug-1993	19-Aug-2014	N	8	ii,fff,jjj,ooo	Y	
RP	Febco	825YAR	1 1/2	HVD	19-Aug-1993	19-Aug-2014	N	8	ii,fff,jjj,ooo	Y	
RP	Febco	825YAR	1 1/2	VUH	19-Aug-1993	19-Aug-2014	N	8	ii,fff,jjj,ooo	Y	
RP	Febco	825YAR	1 1/2	VUVD	19-Aug-1993	19-Aug-2014	N	8	ii,fff,jjj,ooo	Y	
RP	Febco	825YAR	2	H	19-Aug-1993	19-Aug-2014	N	8	ii,fff,ooo	Y	
RP	Febco	825YAR	2	HVD	19-Aug-1993	19-Aug-2014	N	8	ii,fff,ooo	Y	
RP	Febco	825YAR	2	VUH	19-Aug-1993	19-Aug-2014	N	8	ii,fff,ooo	Y	
RP	Febco	825YAR	2	VUVD	19-Aug-1993	19-Aug-2014	N	8	ii,fff,ooo	Y	
RP	Febco	825YD	2 1/2	H	24-Feb-1989	24-Feb-2016	N	7	(ee),ff,ll,mm,oo,pp,tt,uu,zzz,ffff,gggg	Y	
RP	Febco	825YD	3	H	24-Feb-1989	24-Feb-2016	N	7	(ee),ff,ll,mm,oo,pp,tt,uu,zzz,ffff,gggg	Y	
RP	Febco	825YD	4	H	24-Feb-1989	24-Feb-2016	N	7	(ee),ff,ll,mm,oo,pp,tt,uu,zzz,ffff,gggg	Y	
RP	Febco	825YD	6	H	24-Feb-1989	24-Feb-2016	N	7	(ee),ff,ll,mm,oo,pp,tt,uu,zzz,ffff,gggg	Y	
RP	Febco	825YD	8	H	24-Feb-1989	24-Feb-2016	N	7	(ee),ff,ll,mm,oo,pp,tt,uu,zzz,ffff,gggg	Y	
RP	Febco	825YD	10	H	24-Feb-1989	24-Feb-2016	N	7	(ee),ff,ll,mm,oo,pp,tt,uu,zzz,ffff,gggg	Y	
RP	Febco	825YR	3/4	H	22-Jan-1993	22-Jan-2014	N	8	ii,fff,jjj	Y	
RP	Febco	825YR	1	H	22-Jan-1993	22-Jan-2014	N	8	ii,fff,jjj	Y	
RP	Febco	825YR	1 1/2	H	23-Jul-1993	23-Jul-2014	N	8	ii,fff,jjj	Y	
RP	Febco	825YR	2	H	23-Jul-1993	23-Jul-2014	N	8	ii,fff	Y	
RP	Febco	860U	1/2	H	12-Oct-1998	12-Oct-2013	N	9	(kkk)	N	
RP	Febco	860U	3/4	H	12-Oct-1998	12-Oct-2013	N	9	(kkk)	N	
RP	Febco	860U	1	H	12-Oct-1998	12-Oct-2013	N	9	(kkk)	N	
RP	Febco	860U	1 1/4	H	12-Oct-1998	12-Oct-2013	N	9	(kkk)	N	
RP	Febco	860U	1 1/2	H	12-Oct-1998	12-Oct-2013	N	9	(kkk)	N	
RP	Febco	860U	2	H	12-Oct-1998	12-Oct-2013	N	9	(kkk)	N	
RP	Febco	880V	2 1/2	VUVD	30-Jun-1995	30-Jun-2013	N	8	(ee),ff,ll,mm,oo,pp,tt,uu,nnn,zzz,cccc,ffff,gggg	Y	
RP	Febco	880V	2 1/2	VUVU	30-Jun-1995	30-Jun-2013	N	8	(ee),ff,ll,mm,oo,pp,tt,uu,nnn,zzz,cccc,ffff,gggg	Y	
RP	Febco	880V	3	VUVD	30-Jun-1995	30-Jun-2013	N	8	(ee),ff,ll,mm,oo,pp,tt,uu,nnn,zzz,cccc,ffff,gggg	Y	
RP	Febco	880V	3	VUVU	30-Jun-1995	30-Jun-2013	N	8	(ee),ff,ll,mm,oo,pp,tt,uu,nnn,zzz,cccc,ffff,gggg	Y	
RP	Febco	880V	4	VUVD	8-Aug-1995	8-Aug-2013	N	8	(ee),ff,ll,mm,oo,pp,tt,uu,nnn,zzz,cccc,ffff,gggg	Y	
RP	Febco	880V	4	VUVU	8-Aug-1995	8-Aug-2013	N	8	(ee),ff,ll,mm,oo,pp,tt,uu,nnn,zzz,cccc,ffff,gggg	Y	
RP	Febco	880V	6	VUVD	5-Jul-1995	5-Jul-2013	N	8	(ee),ff,ll,mm,oo,pp,tt,uu,nnn,zzz,cccc,ffff,gggg	Y	
RP	Febco	880V	6	VUVU	5-Jul-1995	5-Jul-2013	N	8	(ee),ff,ll,mm,oo,pp,tt,uu,nnn,zzz,cccc,ffff,gggg	Y	
RP	Febco	880V	8	VUVD	18-Dec-1996	18-Dec-2014	N	8	(ee),ff,ll,mm,oo,pp,tt,uu,nnn,zzz,cccc,ffff,gggg	Y	
RP	Febco	880V	8	VUVU	18-Dec-1996	18-Dec-2014	N	8	(ee),ff,ll,mm,oo,pp,tt,uu,nnn,zzz,cccc,ffff,gggg	Y	
RP	Febco	880V	10	VUVD	17-Jun-1997	17-Jun-2015	N	8	(ee),ff,ll,mm,oo,pp,tt,uu,nnn,zzz,cccc,ffff,gggg	Y	
RP	Febco	880V	10	VUVU	17-Jun-1997	17-Jun-2015	N	8	(ee),ff,ll,mm,oo,pp,tt,uu,nnn,zzz,cccc,ffff,gggg	Y	
RP	Febco	LF825Y	3/4	H	18-Feb-2010	18-Feb-2016	Y	8	(hhhh)	N	
RP	Febco	LF825Y	1	H	18-Feb-2010	18-Feb-2016	Y	8	(hhhh)	N	
RP	Febco	LF825Y	1 1/2	H	25-Mar-2010	25-Mar-2016	Y	8	(hhhh)	N	

Type	Manufacturer	Model	Size	Orientation(s)	Approved	Renewed	≤0.25% Pb	Manual	Shutoffs	Spare Parts	Bypass
RP	Febco	LF825Y	2	H	25-Mar-2010	25-Mar-2016	Y	8	(hhhh)	N	
RP	Febco	LF825YA	3/4	H	18-Feb-2010	18-Feb-2016	Y	8	(hhhh)	N	
RP	Febco	LF825YA	3/4	HVD	18-Feb-2010	18-Feb-2016	Y	8	(hhhh)	N	
RP	Febco	LF825YA	3/4	VUH	18-Feb-2010	18-Feb-2016	Y	8	(hhhh)	N	
RP	Febco	LF825YA	3/4	VUVD	18-Feb-2010	18-Feb-2016	Y	8	(hhhh)	N	
RP	Febco	LF825YA	1	H	18-Feb-2010	18-Feb-2016	Y	8	(hhhh)	N	
RP	Febco	LF825YA	1	HVD	18-Feb-2010	18-Feb-2016	Y	8	(hhhh)	N	
RP	Febco	LF825YA	1	VUH	18-Feb-2010	18-Feb-2016	Y	8	(hhhh)	N	
RP	Febco	LF825YA	1	VUVD	18-Feb-2010	18-Feb-2016	Y	8	(hhhh)	N	
RP	Febco	LF825YA	1 1/2	H	25-Mar-2010	25-Mar-2016	Y	8	(hhhh)	N	
RP	Febco	LF825YA	1 1/2	HVD	25-Mar-2010	25-Mar-2016	Y	8	(hhhh)	N	
RP	Febco	LF825YA	1 1/2	VUH	25-Mar-2010	25-Mar-2016	Y	8	(hhhh)	N	
RP	Febco	LF825YA	1 1/2	VUVD	25-Mar-2010	25-Mar-2016	Y	8	(hhhh)	N	
RP	Febco	LF825YA	2	H	25-Mar-2010	25-Mar-2016	Y	8	(hhhh)	N	
RP	Febco	LF825YA	2	HVD	25-Mar-2010	25-Mar-2016	Y	8	(hhhh)	N	
RP	Febco	LF825YA	2	VUH	25-Mar-2010	25-Mar-2016	Y	8	(hhhh)	N	
RP	Febco	LF825YA	2	VUVD	25-Mar-2010	25-Mar-2016	Y	8	(hhhh)	N	
RP	Febco	LF860	1/2	H	18-Feb-2010	18-Feb-2016	Y	9	(qqqqq), hhhh	N	
RP	Febco	LF860	3/4	H	18-Feb-2010	18-Feb-2016	Y	9	(qqqqq), hhhh	N	
RP	Febco	LF860	1	H	18-Feb-2010	18-Feb-2016	Y	9	(qqqqq), hhhh	N	
RP	Febco	LF860	1 1/4	H	18-Feb-2010	18-Feb-2016	Y	9	(qqqqq), hhhh	N	
RP	Febco	LF860	1 1/2	H	18-Feb-2010	18-Feb-2016	Y	9	(qqqqq), hhhh	N	
RP	Febco	LF860	2	H	18-Feb-2010	18-Feb-2016	Y	9	(qqqqq), hhhh	N	
RP	Febco	LF860	2 1/2	H	28-May-2013		Y	9	(ll),mm,oo,pp,zzz,cccc,dddd,eeee,ffff,gggg,nnnnn	N	
RP	Febco	LF860	3	H	28-May-2013		Y	9	(ll),mm,oo,pp,zzz,cccc,dddd,eeee,ffff,gggg,nnnnn	N	
RP	Febco	LF860	4	H	14-Jun-2013		Y	9	(ll),mm,oo,pp,zzz,cccc,dddd,eeee,ffff,gggg,nnnnn	N	
RP	Febco	LF860	6	H	14-Jun-2013		Y	9	(ll),mm,oo,pp,zzz,cccc,dddd,eeee,ffff,gggg,nnnnn	N	
RP	Febco	LF860	8	H	3-Sep-2013		Y	9	(ll),mm,oo,pp,zzz,cccc,dddd,eeee,ffff,gggg,nnnnn	N	
RP	Febco	LF860	10	H	25-Sep-2013		Y	9	(ll),mm,oo,pp,zzz,cccc,dddd,eeee,ffff,gggg,nnnnn	N	
RP	Febco	LF860U	1/2	H	3-Sep-2013		Y	9	(ppppp), hhhh	N	
RP	Febco	LF860U	3/4	H	3-Sep-2013		Y	9	(ppppp), hhhh	N	
RP	Febco	LF860U	1	H	3-Sep-2013		Y	9	(ppppp), hhhh	N	
RP	Febco	LF860U	1 1/4	H	3-Sep-2013		Y	9	(ppppp), hhhh	N	
RP	Febco	LF860U	1 1/2	H	3-Sep-2013		Y	9	(ppppp), hhhh	N	
RP	Febco	LF860U	2	H	3-Sep-2013		Y	9	(ppppp), hhhh	N	
RP	Febco	LF880V	2 1/2	VUVD	28-May-2013		Y	9	(ll),mm,oo,pp,zzz,cccc,dddd,eeee,ffff,gggg,nnnnn	N	
RP	Febco	LF880V	2 1/2	VUVU	28-May-2013		Y	9	(ll),mm,oo,pp,zzz,cccc,dddd,eeee,ffff,gggg,nnnnn	N	
RP	Febco	LF880V	3	VUVD	28-May-2013		Y	9	(ll),mm,oo,pp,zzz,cccc,dddd,eeee,ffff,gggg,nnnnn	N	
RP	Febco	LF880V	3	VUVU	28-May-2013		Y	9	(ll),mm,oo,pp,zzz,cccc,dddd,eeee,ffff,gggg,nnnnn	N	
RP	Febco	LF880V	4	VUVD	28-May-2013		Y	9	(ll),mm,oo,pp,zzz,cccc,dddd,eeee,ffff,gggg,nnnnn	N	
RP	Febco	LF880V	4	VUVU	28-May-2013		Y	9	(ll),mm,oo,pp,zzz,cccc,dddd,eeee,ffff,gggg,nnnnn	N	
RP	Febco	LF880V	6	VUVD	3-Sep-2013		Y	9	(ll),mm,oo,pp,zzz,cccc,dddd,eeee,ffff,gggg,nnnnn	N	
RP	Febco	LF880V	6	VUVU	3-Sep-2013		Y	9	(ll),mm,oo,pp,zzz,cccc,dddd,eeee,ffff,gggg,nnnnn	N	
RP	Febco	LF880V	8	VUVD	26-Nov-2013		Y	9	(ll),mm,oo,pp,zzz,cccc,dddd,eeee,ffff,gggg,nnnnn	N	
RP	Febco	LF880V	8	VUVU	26-Nov-2013		Y	9	(ll),mm,oo,pp,zzz,cccc,dddd,eeee,ffff,gggg,nnnnn	N	
RP	Flomatic	RPZ	3/4	H	7-Jun-1994	17-Jun-2015	N	8	ii	Y	
RP	Flomatic	RPZ	1	H	7-Jun-1994	17-Jun-2015	N	8	ii	Y	
RP	Flomatic	RPZ	1 1/2	H	10-May-1995	10-May-2013	N	8	ii	Y	
RP	Flomatic	RPZ	2	H	10-May-1995	10-May-2013	N	8	ii	Y	
RP	Flomatic	RPZ	2 1/2	H	14-Feb-1997	14-Feb-2015	N	8	(gg),hh,jj,kk,ll,mm,yy,zz,ccc,ddd	Y	
RP	Flomatic	RPZ	3	H	14-Feb-1997	14-Feb-2015	N	8	(gg),hh,jj,kk,ll,mm,yy,zz,ccc,ddd	Y	
RP	Flomatic	RPZ	4	H	28-Jan-1999	28-Jan-2016	N	9	(gg),hh,jj,kk,ll,mm,yy,zz,ccc,ddd	Y	
RP	Flomatic	RPZ	4	H	28-Jan-1999	28-Jan-2016	Y	9	ddddd	Y	
RP	Flomatic	RPZ	6	H	31-Jan-2002	31-Jan-2014	N	9	(gg),hh,jj,kk,ll,mm,yy,zz,ccc,ddd	Y	
RP	Flomatic	RPZ	6	H	31-Jan-2002	31-Jan-2014	Y	9	ddddd	Y	
RP	Flomatic	RPZ	8	H	5-Feb-2005	5-Feb-2014	N	9	(gg), hh, jj, kk, ll, mm, yy, zz, ccc, ddd	Y	
RP	Flomatic	RPZE	3/4	H	7-Jun-2001	7-Jun-2013	Y	8	(hhhhh)	Y	
RP	Flomatic	RPZE	1	H	7-Jun-2001	7-Jun-2013	Y	8	(hhhhh)	Y	
RP	Flomatic	RPZE	1 1/2	H	7-Jun-2001	7-Jun-2013	Y	8	(hhhhh)	Y	
RP	Flomatic	RPZE	2	H	7-Jun-2001	7-Jun-2013	Y	8	(hhhhh)	Y	
RP	Flomatic	RPZE II	1/2	H	7-Jun-2001	7-Jun-2013	Y	8	(hhhhh)	Y	
RP	Flomatic	RPZE II	3/4	H	7-Jun-2001	7-Jun-2013	Y	8	(hhhhh)	Y	
RP	Flomatic	RPZII	1/2	H	15-Aug-1997	15-Aug-2015	N	8	ii	Y	
RP	Flomatic	RPZII	3/4	H	15-Aug-1997	15-Aug-2015	N	8	ii	Y	
RP	Flomatic	RPZIIE	1/2								
RP	Flomatic	RPZIIE	3/4								
RP	Neptune						N				
RP	Watts	957	2 1/2	H	7-Oct-2002	7-Oct-2014	N	9	(ppp),qqq,aaaa,bbbb	N	
RP	Watts	957	2 1/2	H	7-Oct-2002	7-Oct-2014	Y	9	zzz,dddd,eeee,gggg,kkkk,llll,mmmm,nnnn,nnnnn	N	
RP	Watts	957	3	H	7-Oct-2002	7-Oct-2014	N	9	(ppp),qqq,aaaa,bbbb	N	
RP	Watts	957	3	H	7-Oct-2002	7-Oct-2014	Y	9	zzz,dddd,eeee,gggg,kkkk,llll,mmmm,nnnn,nnnnn	N	
RP	Watts	957	4	H	7-Oct-2002	7-Oct-2014	N	9	(ppp),qqq,aaaa,bbbb	N	
RP	Watts	957	4	H	7-Oct-2002	7-Oct-2014	Y	9	zzz,dddd,eeee,gggg,kkkk,llll,mmmm,nnnn,nnnnn	N	
RP	Watts	957	6	H	20-Dec-2004	20-Dec-2013	N	9	(ppp),qqq,aaaa,bbbb	N	
RP	Watts	957	6	H	20-Dec-2004	20-Dec-2013	Y	9	zzz,dddd,eeee,gggg,kkkk,llll,mmmm,nnnn,nnnnn	N	
RP	Watts	957	8	H	13-Aug-2007	13-Aug-2013	N	9	(ppp),qqq,aaaa,bbbb	N	
RP	Watts	957	8	H	13-Aug-2007	13-Aug-2013	Y	9	zzz,cccc,dddd,eeee,gggg,kkkk,llll,mmmm,nnnn,nnnnn	N	
RP	Watts	957	10	H	22-Jul-2009	22-Jul-2015	N	9	(ppp),qqq,aaaa,bbbb	N	
RP	Watts	957	10	H	22-Jul-2009	22-Jul-2015	Y	9	zzz,cccc,dddd,eeee,gggg,kkkk,llll,mmmm,nnnn,nnnnn	N	
RP	Watts	967	2 1/2	H	7-Oct-2002	7-Oct-2014	N	9	(ppp),qqq,zzz,aaaa,bbbb,dddd,eeee,ffff,gggg,kkkk,llll,mmmm,nnnn,nnnnn	N	
RP	Watts	967	3	H	7-Oct-2002	7-Oct-2014	N	9	(ppp),qqq,zzz,aaaa,bbbb,dddd,eeee,ffff,gggg,kkkk,llll,mmmm,nnnn,nnnnn	N	
RP	Watts	967	4	H	18-Jan-2005	18-Jan-2014	N	9	(ppp),qqq,aaaa,bbbb,gggg,kkkk,llll,mmmm,nnnn,nnnnn	N	
RP	Watts	967	6	H	13-Aug-2007	13-Aug-2013	N	9	(ppp),qqq,sss, ttt, aaaa,bbbb,cccc,dddd,kkkk,llll,mmmm,nnnn,nnnnn	N	
RP	Watts	967	8	H	22-Jul-2009	22-Jul-2015	N	9	(ppp),qqq,sss,ttt,zzz,aaaa,bbbb,cccc,dddd,eeee,gggg,kkkk,llll,mmmm,nnnn,nnnnn	N	
RP	Watts	967	10	H	22-Jul-2009	22-Jul-2015	N	9	(ppp),qqq,sss,ttt,zzz,aaaa,bbbb,cccc,dddd,eeee,gggg,kkkk,llll,mmmm,nnnn	N	
RP	Watts	994	2 1/2	H	15-Apr-1994	15-Apr-2015	N	8	(tt),ee,ff,gg,hh,pp,uu,ccc,ddd	N	
RP	Watts	994	2 1/2	H	15-Apr-1994	15-Apr-2015	Y	8	ll,mm,oo,ffff,gggg	N	
RP	Watts	994	3	H	15-Apr-1994	15-Apr-2015	N	8	(tt),ee,ff,gg,hh,pp,uu,ccc,ddd	N	
RP	Watts	994	3	H	15-Apr-1994	15-Apr-2015	Y	8	ll,mm,oo,ffff,gggg	N	
RP	Watts	994	4	H	15-Apr-1994	15-Apr-2015	N	8	(tt),ee,ff,gg,hh,pp,uu,ccc,ddd	N	
RP	Watts	994	4	H	15-Apr-1994	15-Apr-2015	Y	8	ll,mm,oo,ffff,gggg	N	
RP	Watts	994	6	H	22-Sep-1997	22-Sep-2015	N	8	(tt),ee,ff,gg,hh,pp,uu,ccc,ddd	N	
RP	Watts	994	6	H	22-Sep-1997	22-Sep-2015	Y	8	ll,mm,oo,ffff,gggg	N	
RP	Watts	009	2 1/2	H	31-Aug-1990	31-Aug-2014	N	8	(oo),gg,hh,ll,mm,pp,tt,uu,yy,ffff,gggg	N	
RP	Watts	009	3	H	31-Aug-1990	31-Aug-2014	N	8	(oo),gg,hh,ll,mm,pp,tt,uu,yy,eee,ffff,gggg	N	
RP	Watts	009M1PCQT	1 1/4	H	27-Sep-1994	27-Sep-2015	N	8	vv,xx,ooo,hhhh,pppp,rrrrr	Y	
RP	Watts	009M1PCQT	1 1/2	H	27-Sep-1994	27-Sep-2015	N	8	vv,xx,ooo,hhhh,pppp,rrrrr	Y	
RP	Watts	009M1PCQT	2	H	27-Sep-1994	27-Sep-2015	N	8	vv,xx,ooo,hhhh,pppp,rrrrr	Y	
RP	Watts	009M1QT	1 1/4	H	30-Jun-1992	30-Jun-2013	N	8	vv,xx,ooo,hhhh,pppp,rrrrr	Y	
RP	Watts	009M1QT	1 1/2	H	30-Jun-1992	30-Jun-2013	N	8	vv,xx,ooo,hhhh,pppp,rrrrr	Y	
RP	Watts	009M1QT	2	H	19-Dec-1991	19-Dec-2015	N	8	vv,xx,ooo,hhhh,pppp,rrrrr	Y	
RP	Watts	009M2-FP	1	H	1-Sep-2009	1-Sep-2015	N	9	(eeeee)	N	
RP	Watts	009M2-FP	1 1/4	H	1-Sep-2009	1-Sep-2015	N	9	(eeeee)	N	
RP	Watts	009M2-FP	1 1/2	H	1-Sep-2009	1-Sep-2015	N	9	(eeeee)	N	
RP	Watts	009M2-FP	2	H	1-Sep-2009	1-Sep-2015	N	9	(eeeee)	N	
RP	Watts	009M2PCQT	3/4	H	7-Oct-2002	7-Oct-2014	N	8	(vv),xx,ooo,hhhh,pppp,rrrrr	N	
RP	Watts	009M2PCQT	1	H	15-Jan-1999	15-Jan-2014	N	9	(vv),xx,ooo,hhhh,pppp,rrrrr	N	
RP	Watts	009M2PCQT	1 1/4	H	12-Sep-1994	12-Sep-2015	N	8	(vv),xx,ooo,hhhh,pppp,rrrrr	N	
RP	Watts	009M2PCQT	1 1/2	H	12-Sep-1994	12-Sep-2015	N	8	(vv),xx,ooo,hhhh,pppp,rrrrr	N	
RP	Watts	009M2PCQT	2	H	26-Aug-1997	26-Aug-2015	N	9	(vv),xx,ooo,hhhh,pppp,rrrrr	N	
RP	Watts	009M2QT	3/4	H	31-Oct-1992	31-Oct-2013	N	8	(vv),xx,ooo,hhhh,pppp,rrrrr	N	
RP	Watts	009M2QT	1	H	18-May-1998	18-May-2013	N	9	(vv),xx,ooo,hhhh,pppp,rrrrr	N	
RP	Watts	009M2QT	1 1/4	H	24-Aug-1993	24-Aug-2014	N	8	(vv),xx,ooo,hhhh,pppp,rrrrr	N	
RP	Watts	009M2QT	1 1/2	H	24-Aug-1993	24-Aug-2014	N	8	(vv),xx,ooo,hhhh,pppp,rrrrr	N	
RP	Watts	009M2QT	2	H	10-Sep-1996	10-Sep-2014	N	9	(vv),xx,ooo,hhhh,pppp,rrrrr	N	
RP	Watts	009M3-FP	3/4	H	1-Sep-2009	1-Sep-2015	N	9	(eeeee)	N	
RP	Watts	009M3QT	3/4	H	18-Oct-1999	18-Oct-2014	N	9	(vv),xx,ooo,hhhh,pppp,rrrrr	N	
RP	Watts	009PCQT	1/2	H	17-Feb-1995	17-Feb-2016	N	8	(vv),xx,ooo,hhhh,pppp,rrrrr	N	
RP	Watts	009PCQT	3/4	H	10-Dec-1993	10-Dec-2014	N	8	(vv),xx,ooo,hhhh,pppp,rrrrr	N	
RP	Watts	009PCQT	1	H	10-Dec-1993	10-Dec-2014	N	8	vv,xx,ooo,hhhh,pppp,rrrrr	Y	
RP	Watts	009PCQT	1 1/4	H	27-Sep-1994	27-Sep-2015	N	8	vv,xx,ooo,hhhh,pppp,rrrrr	Y	
RP	Watts	009PCQT	1 1/2	H	27-Sep-1994	27-Sep-2015	N	8	vv,xx,ooo,hhhh,pppp,rrrrr	Y	
RP	Watts	009PCQT	2	H	27-Sep-1994	27-Sep-2015	N	8	vv,xx,ooo,hhhh,pppp,rrrrr	Y	
RP	Watts	009QT	1/4	H	7-Aug-1995	7-Aug-2013	N	8	(vv),xx,ooo,hhhh,pppp	N	
RP	Watts	009QT	3/8	H	7-Aug-1995	7-Aug-2013	N	8	(vv),xx,ooo,hhhh,pppp	N	

Type	Manufacturer	Model	Size	Orientation(s)	Approved	Renewed	≤0.25% Pb	Manual	Shutoffs	Spare Parts	Bypass
RP	Watts	009QT	1/2	H	10-Sep-1996	10-Sep-2014	N	9	(vv),xx,ooo,hhhh,pppp,rrrrr	N	
RP	Watts	009QT	3/4	H	11-Jan-1988	11-Jan-2015	N	7	(vv),xx,ooo,hhhh,pppp,rrrrr	N	
AVB	Watts	288AM5	3/4	VUH	1-Nov-1991	1-Nov-2015	N	8		N	
AVB	Watts	288AM5	1	VUH	1-Nov-1991	1-Nov-2015	N	8		N	
DC	Ames	2000-DC	10	H	4-Aug-1987	2-Aug-2014	N	7	tt,ee,ff,gg,hh,ll,mm,oo,pp,uu,ccc,ddd,ffff,gggg	Y	
DC	Ames	2000-DCA	4	H	11-Jan-1988	11-Jan-2015	N	7	tt,ee,ff,gg,hh,ll,mm,oo,pp,uu,ccc,ddd,ffff,gggg	Y	
DC	Ames	2000-DCA	6	H	11-Jan-1988	11-Jan-2015	N	7	tt,ee,ff,gg,hh,ll,mm,oo,pp,uu,ccc,ddd,ffff,gggg	Y	
DC	Ames	2000-DCA	8	H	11-Jan-1988	11-Jan-2015	N	7	tt,ee,ff,gg,hh,ll,mm,oo,pp,uu,ccc,ddd,ffff,gggg	Y	
DC	Ames	2000-G-DC	10	H	4-Aug-1987	4-Aug-2014	N	7	tt,ee,ff,gg,hh,ll,mm,oo,pp,uu,ccc,ddd,ffff,gggg	Y	
DC	Ames	2000-G-DCA	4	H	11-Jan-1988	11-Jan-2015	N	7	tt,ee,ff,gg,hh,ll,mm,oo,pp,uu,ccc,ddd,ffff,gggg	Y	
DC	Ames	2000-G-DCA	6	H	11-Jan-1988	11-Jan-2015	N	7	tt,ee,ff,gg,hh,ll,mm,oo,pp,uu,ccc,ddd,ffff,gggg	Y	
DC	Ames	2000-G-DCA	8	H	11-Jan-1988	11-Jan-2015	N	7	tt,ee,ff,gg,hh,ll,mm,oo,pp,uu,ccc,ddd,ffff,gggg	Y	
DC	Ames	2000B	1/2	H	6-Dec-1983	6-Dec-2013	N	8	(vv),xx,ooo,hhhh,pppp,rrrrr	N	
DC	Ames	2000B	1/2	H	16-Jun-1997	16-Jun-2015	N	9	(vv),xx,ooo,hhhh,pppp,rrrrr	N	
DC	Ames	2000B	1/2	VU	16-Jun-1997	16-Jun-2015	N	9	(vv),xx,ooo,hhhh,pppp,rrrrr	N	
DC	Ames	2000B	3/4	H	5-Apr-1993	5-Apr-2014	N	8	(vv),xx,ooo,hhhh,pppp,rrrrr	N	
DC	Ames	2000B	3/4	VU	27-Aug-1996	27-Aug-2014	N	8	(vv),xx,ooo,hhhh,pppp,rrrrr	N	
DC	Ames	2000B	1	H	18-May-1998	18-May-2013	N	9	(vv),xx,ooo,hhhh,pppp,rrrrr	N	
DC	Ames	2000B	1	H	26-Feb-1991	26-Feb-2015	N	8	(vv),xx,ooo,hhhh,pppp,rrrrr	N	
DC	Ames	2000B	1	VU	18-May-1998	18-May-2013	N	9	(vv),xx,ooo,hhhh,pppp,rrrrr	N	
DC	Ames	2000B	1 1/4	H	1-Oct-1996	1-Oct-2014	N	8	(vv),xx,ooo,hhhh,pppp,rrrrr	N	
DC	Ames	2000B	1 1/4	VU	1-Oct-1996	1-Oct-2014	N	8	(vv),xx,ooo,hhhh,pppp,rrrrr	N	
DC	Ames	2000B	1 1/2	H	24-May-1994	24-May-2015	N	8	(vv),xx,ooo,hhhh,pppp,rrrrr	N	
DC	Ames	2000B	1 1/2	VU	11-Mar-1996	11-Mar-2014	N	8	(vv),xx,ooo,hhhh,pppp,rrrrr	N	
DC	Ames	2000B	2	H	30-Jun-1992	30-Jun-2013	N	8	(vv),xx,ooo,hhhh,pppp,rrrrr	N	
DC	Ames	2000B	2	VU	8-Mar-1996	8-Mar-2014	N	8	(vv),xx,ooo,hhhh,pppp,rrrrr	N	
DC	Ames	2000B-FP	3/4	H	1-Sep-2009	1-Sep-2015	N	9	(eeeee)	N	
DC	Ames	2000B-FP	1	H	1-Sep-2009	1-Sep-2015	N	9	(eeeee)	N	
DC	Ames	2000B-FP	1 1/4	H	1-Sep-2009	1-Sep-2015	N	9	(eeeee)	N	
DC	Ames	2000B-FP	1 1/2	H	1-Sep-2009	1-Sep-2015	N	9	(eeeee)	N	
DC	Ames	2000B-FP	2	H	1-Sep-2009	1-Sep-2015	N	9	(eeeee)	N	
DC	Ames	2000BM3	3/4	H	27-Mar-2000	27-Mar-2015	N	9	(vv),xx,ooo,hhhh,pppp,rrrrr	N	
DC	Ames	2000BM3	3/4	VU	27-Mar-2000	27-Mar-2015	N	9	(vv),xx,ooo,hhhh,pppp,rrrrr	N	
DC	Ames	2000BM3-FP	3/4	H	1-Sep-2009	1-Sep-2015	N	9	(eeeee)	N	
DC	Ames	2000CIV	4	H	15-Jan-1982	15-Jan-2015	N	6	(oo),gg,hh,ll,mm,pp,tt,uu,eee	N	
DC	Ames	2000CIV	4	VU	11-Mar-1996	11-Mar-2014	N	8	(oo),gg,hh,ll,mm,pp,tt,uu,eee	N	
DC	Ames	2000CIV	6	H	18-May-1982	18-May-2015	N	6	(oo),gg,hh,ll,mm,pp,tt,uu,eee	N	
DC	Ames	2000CIV	6	VU	5-Dec-1996	5-Dec-2014	N	8	(oo),gg,hh,ll,mm,pp,tt,uu,eee	N	
DC	Ames	2000CIV	8	H	6-Jul-1981	6-Jul-2014	N	6	(oo),gg,hh,ll,mm,pp,tt,uu,eee	N	
DC	Ames	2000CIV	8	VU	5-Dec-1996	5-Dec-2014	N	8	(oo),gg,hh,ll,mm,pp,tt,uu,eee	N	
DC	Ames	2000CIV	10	H	16-Mar-1983	16-Mar-2016	N	6	(oo),gg,hh,ll,mm,pp,tt,uu,eee	N	
DC	Ames	2000CIV	10	VU	5-Dec-1996	5-Dec-2014	N	8	(oo),gg,hh,ll,mm,pp,tt,uu,eee	N	
DC	Ames	2000SE	2 1/2	H	10-Sep-1996	10-Sep-2014	N	8	(mm),ee,ff,gg,hh,ll,mm,oo,pp,tt,uu,ccc,ddd,ffff,gggg	N	
DC	Ames	2000SE	6	H	22-Nov-1993	22-Nov-2014	N	8	tt,ee,ff,gg,hh,ll,mm,oo,pp,uu,ccc,ddd,ffff,gggg	Y	
DC	Ames	2000SE	8	H	9-Sep-1992	9-Sep-2013	N	8	tt,ee,ff,gg,hh,ll,mm,oo,pp,uu,ccc,ddd,ffff,gggg	Y	
DC	Ames	2000SS	3/4	H	5-May-1995	5-May-2013	N	8	ii	Y	
DC	Ames	2000SS	1	H	5-May-1995	5-May-2013	N	8	ii	Y	
DC	Ames	2000SS	1 1/4	H	14-Jul-1995	14-Jul-2013	N	8	ii	Y	
DC	Ames	2000SS	1 1/2	H	13-Oct-1995	13-Oct-2013	N	8	ii	Y	
DC	Ames	2000SS	2	H	13-Oct-1995	13-Oct-2013	N	8	ii	Y	
DC	Ames	2000SS	2 1/2	H	11-Jul-1991	11-Jul-2015	N	8	(tt),ee,ff,gg,hh,pp,uu,ccc,ddd	N	
DC	Ames	2000SS	2 1/2	H	11-Jul-1991	11-Jul-2015	Y	8	ll,mm,oo,ffff,gggg	N	
DC	Ames	2000SS	3	H	11-Jul-1991	11-Jul-2015	N	8	(tt),ee,ff,gg,hh,pp,uu,ccc,ddd	N	
DC	Ames	2000SS	3	H	11-Jul-1991	11-Jul-2015	Y	8	ll,mm,oo,ffff,gggg	N	
DC	Ames	2000SS	4	H	11-Jul-1991	11-Jul-2015	N	8	(tt),ee,ff,gg,hh,pp,uu,ccc,ddd	N	
DC	Ames	2000SS	4	H	11-Jul-1991	11-Jul-2015	Y	8	ll,mm,oo,ffff,gggg	N	
DC	Ames	2000SS	6	H	9-Sep-1992	9-Sep-2013	N	8	(tt),ee,ff,gg,hh,pp,uu,ccc,ddd	N	
DC	Ames	2000SS	6	H	9-Sep-1992	9-Sep-2013	Y	8	ll,mm,oo,ffff,gggg	N	
DC	Ames	2000SS	8	H	16-Sep-1996	16-Sep-2014	N	8	(tt),ee,ff,gg,hh,pp,uu,ccc,ddd	N	
DC	Ames	2000SS	8	H	16-Sep-1996	16-Sep-2014	Y	8	ll,mm,oo,ffff,gggg	N	
DC	Ames	2000SS	10	H	16-Feb-2001	16-Feb-2016	N	8	pp,	N	
DC	Ames	2000SS	10	H	16-Feb-2001	16-Feb-2016	Y	8	(ll),mm,oo	N	
DC	Ames	2000SS	12	H	22-Jul-2009	22-Jul-2015	N	9	pp,	N	
DC	Ames	2000SS	12	H	22-Jul-2009	22-Jul-2015	Y	9	(ll),mm,oo	N	
DC	Ames	2000SS	12	VU	22-Feb-2011	22-Feb-2014	N	9	pp,	N	
DC	Ames	2000SS	12	VU	22-Feb-2011	22-Feb-2014	Y	9	(ll),mm,oo	N	
DC	Ames	2000SS-M	4	H	5-May-1995	5-May-2013	N	8	(tt),ee,ff,gg,hh,ll,mm,oo,pp,uu,ccc,ddd,ffff,gggg	N	
DC	Ames	2000SS-M	6	H	5-May-1995	5-May-2013	N	8	(tt),ee,ff,gg,hh,ll,mm,oo,pp,uu,ccc,ddd,ffff,gggg	N	
DC	Ames	200B	1/2	H	21-Apr-2006	21-Apr-2015	N	9	(vv),xx,ooo,hhhh,pppp,rrrrr	N	
DC	Ames	200B	1/2	VD	21-Apr-2006	21-Apr-2015	N	9	(vv),xx,ooo,hhhh,pppp,rrrrr	N	
DC	Ames	200B	1/2	VU	21-Apr-2006	21-Apr-2015	N	9	(vv),xx,ooo,hhhh,pppp,rrrrr	N	
DC	Ames	200B	3/4	H	21-Apr-2006	21-Apr-2015	N	9	(vv),xx,ooo,hhhh,pppp,rrrrr	N	
DC	Ames	200B	3/4	VD	21-Apr-2006	21-Apr-2015	N	9	(vv),xx,ooo,hhhh,pppp,rrrrr	N	
DC	Ames	200B	3/4	VU	21-Apr-2006	21-Apr-2015	N	9	(vv),xx,ooo,hhhh,pppp,rrrrr	N	
DC	Ames	200B	1	H	21-Apr-2006	21-Apr-2015	N	9	(vv),xx,ooo,hhhh,pppp,rrrrr	N	
DC	Ames	200B	1	VD	21-Apr-2006	21-Apr-2015	N	9	(vv),xx,ooo,hhhh,pppp,rrrrr	N	
DC	Ames	200B	1	VU	21-Apr-2006	21-Apr-2015	N	9	(vv),xx,ooo,hhhh,pppp,rrrrr	N	
DC	Ames	200B	1 1/4	H	21-Apr-2006	21-Apr-2015	N	9	(vv),xx,ooo,hhhh,pppp,rrrrr	N	
DC	Ames	200B	1 1/4	VD	21-Apr-2006	21-Apr-2015	N	9	(vv),xx,ooo,hhhh,pppp,rrrrr	N	
DC	Ames	200B	1 1/4	VU	21-Apr-2006	21-Apr-2015	N	9	(vv),xx,ooo,hhhh,pppp,rrrrr	N	
DC	Ames	200B	1 1/2	H	21-Apr-2006	21-Apr-2015	N	9	(vv),xx,ooo,hhhh,pppp,rrrrr	N	
DC	Ames	200B	1 1/2	VD	21-Apr-2006	21-Apr-2015	N	9	(vv),xx,ooo,hhhh,pppp,rrrrr	N	
DC	Ames	200B	1 1/2	VU	21-Apr-2006	21-Apr-2015	N	9	(vv),xx,ooo,hhhh,pppp,rrrrr	N	
DC	Ames	200B	2	H	21-Apr-2006	21-Apr-2015	N	9	(vv),xx,ooo,hhhh,pppp,rrrrr	N	
DC	Ames	200B	2	VD	21-Apr-2006	21-Apr-2015	N	9	(vv),xx,ooo,hhhh,pppp,rrrrr	N	
DC	Ames	200B	2	VU	21-Apr-2006	21-Apr-2015	N	9	(vv),xx,ooo,hhhh,pppp,rrrrr	N	
DC	Ames	200B R10	1/2	H	21-Apr-2006	21-Apr-2015	N	9	(vv),xx,ooo,hhhh,pppp,rrrrr	N	
DC	Ames	200B R10	1/2	VD	21-Apr-2006	21-Apr-2015	N	9	(vv),xx,ooo,hhhh,pppp,rrrrr	N	
DC	Ames	200B R10	1/2	VU	21-Apr-2006	21-Apr-2015	N	9	(vv),xx,ooo,hhhh,pppp,rrrrr	N	
DC	Ames	200B R10	3/4	H	21-Apr-2006	21-Apr-2015	N	9	(vv),xx,ooo,hhhh,pppp,rrrrr	N	
DC	Ames	200B R10	3/4	VD	21-Apr-2006	21-Apr-2015	N	9	(vv),xx,ooo,hhhh,pppp,rrrrr	N	
DC	Ames	200B R10	3/4	VU	21-Apr-2006	21-Apr-2015	N	9	(vv),xx,ooo,hhhh,pppp,rrrrr	N	
DC	Ames	200B-A	1/2	VUVD	21-Apr-2006	21-Apr-2015	N	9	(vv),xx,ooo,hhhh,pppp,rrrrr	N	
DC	Ames	200B-A	1	VUVD	21-Apr-2006	21-Apr-2015	N	9	(vv),xx,ooo,hhhh,pppp,rrrrr	N	
DC	Ames	200B-A	1 1/4	VUVD	21-Apr-2006	21-Apr-2015	N	9	(vv),xx,ooo,hhhh,pppp,rrrrr	N	
DC	Ames	200B-A	1 1/2	VUVD	21-Apr-2006	21-Apr-2015	N	9	(vv),xx,ooo,hhhh,pppp,rrrrr	N	
DC	Ames	200B-A	2	VUVD	21-Apr-2006	21-Apr-2015	N	9	(vv),xx,ooo,hhhh,pppp,rrrrr	N	
DC	Ames	200B-AR10	1/2	VUVD	3-Jul-2013		N	9	(vv),xx,ooo,hhhh,pppp,rrrrr	N	
DC	Ames	200B-AR10	3/4	VUVD	3-Jul-2013		N	9	(vv),xx,ooo,hhhh,pppp,rrrrr	N	
DC	Ames	Colt 200	2 1/2	H	20-Jul-2004	20-Jul-2013	N	9	(ppp),qqq,nnnnn	N	
DC	Ames	Colt 200	2 1/2	H	20-Jul-2004	20-Jul-2013	Y	9	yyy,zzz,dddd,eeee,dddd,gggg,kkkk,llll,mmmm,nnnn	N	
DC	Ames	Colt 200	2 1/2	VU	20-Jul-2004	20-Jul-2013	N	9	(ppp),qqq,nnnnn	N	
DC	Ames	Colt 200	2 1/2	VU	20-Jul-2004	20-Jul-2013	Y	9	yyy,zzz,dddd,eeee,dddd,gggg,kkkk,llll,mmmm,nnnn	N	
DC	Ames	Colt 200	3	H	20-Jul-2004	20-Jul-2013	N	9	(ppp),qqq,nnnnn	N	
DC	Ames	Colt 200	3	H	20-Jul-2004	20-Jul-2013	Y	9	yyy,zzz,dddd,eeee,dddd,gggg,kkkk,llll,mmmm,nnnn	N	
DC	Ames	Colt 200	3	VU	20-Jul-2004	20-Jul-2013	N	9	(ppp),qqq,nnnnn	N	
DC	Ames	Colt 200	3	VU	20-Jul-2004	20-Jul-2013	Y	9	yyy,zzz,dddd,eeee,dddd,gggg,kkkk,llll,mmmm,nnnn	N	
DC	Ames	Colt 200	4	H	20-Jul-2004	20-Jul-2013	N	9	(ppp),qqq,nnnnn	N	
DC	Ames	Colt 200	4	H	20-Jul-2004	20-Jul-2013	Y	9	yyy,zzz,dddd,eeee,dddd,gggg,kkkk,llll,mmmm,nnnn	N	
DC	Ames	Colt 200	4	VU	20-Jul-2004	20-Jul-2013	N	9	(ppp),qqq,nnnnn	N	
DC	Ames	Colt 200	4	VU	20-Jul-2004	20-Jul-2013	Y	9	yyy,zzz,dddd,eeee,dddd,gggg,kkkk,llll,mmmm,nnnn	N	
DC	Ames	Colt 200	6	H	21-Apr-2006	21-Apr-2015	N	9	(ppp),qqq,aaaa,bbbb,nnnnn	N	
DC	Ames	Colt 200	6	H	21-Apr-2006	21-Apr-2015	Y	9	yyy,zzz,dddd,eeee,ffff,gggg,kkkk,llll,mmmm,nnnn	N	
DC	Ames	Colt 200	6	VU	21-Apr-2006	21-Apr-2015	N	9	(ppp),qqq,aaaa,bbbb,nnnnn	N	
DC	Ames	Colt 200	6	VU	21-Apr-2006	21-Apr-2015	Y	9	yyy,zzz,dddd,eeee,ffff,gggg,kkkk,llll,mmmm,nnnn	N	
DC	Ames	Colt 200	8	H	11-Aug-2004	11-Aug-2013	N	9	ppp,qqq,aaaa,bbbb,nnnnn	N	
DC	Ames	Colt 200	8	H	11-Aug-2004	11-Aug-2013	Y	9	(yyy),zzz,dddd,eeee,gggg,kkkk,llll,mmmm,nnnn	N	
DC	Ames	Colt 200	8	VU	10-Feb-2006	10-Feb-2015	N	9	ppp,qqq,aaaa,bbbb,nnnnn	N	
DC	Ames	Colt 200	8	VU	10-Feb-2006	10-Feb-2015	Y	9	(yyy),zzz,dddd,eeee,gggg,kkkk,llll,mmmm,nnnn	N	
DC	Ames	Colt 200	10	H	2-May-2008	2-May-2014	N	9	ppp,qqq,aaaa,bbbb	N	
DC	Ames	Colt 200	10	H	2-May-2008	2-May-2014	Y	9	yyy,zzz,dddd,eeee,ggg,kkkk,llll,mmmm,nnnn	N	
DC	Ames	Colt 200	10	VU	2-May-2008	2-May-2014	N	9	(ppp),qqq,aaaa,bbbb	N	
DC	Ames	Colt 200	10	VU	5-Dec-2014		Y	9	yyy,zzz,dddd,eeee,ggg,kkkk,llll,mmmm,nnnn	N	
DC	Ames	Colt 200a	2 1/2	H	7-Oct-2002	7-Oct-2014	N	9	(ppp),fff,qqq,yyy,zzz,aaaa,bbbb,dddd,eeee,gggg,kkkk,llll,mmmm,nnnn,nnnnn	N	
DC	Ames	Colt 200a	2 1/2	VU	7-Oct-2002	7-Oct-2014	N	9	(ppp),qqq,yyy,zzz,aaaa,bbbb,dddd,eeee,ffff,gggg,kkkk,llll,mmmm,nnnn,nnnnn	N	

Type	Manufacturer	Model	Size	Orientation(s)	Approved	Renewed	≤0.25% Pb	Manual	Shutoffs	Spare Parts	Bypass
RP	Watts	957Z	4	VUVU	14-Apr-2003	14-Apr-2015	N	9	(ppp),qqq,aaaa,bbbb,nnnnn	N	
RP	Watts	957Z	4	VUVU	14-Apr-2003	14-Apr-2015	Y	9	yyy,zzz,dddd,eeee,gggg,kkkk,llll,mmmm,nnnn	N	
RP	Watts	957Z	8	VUVU	14-Jun-2013		N	9	ppp, qqq, aaaa, bbbb,		
RP	Watts	957Z	8	VUVU	14-Jun-2013		Y	9	(yyy), zzz, dddd, eeee, gggg, kkkk, llll, mmmm, nnnn		
RP	Watts	957ZQT	2 1/2	VUVU	20-Oct-2009	20-Oct-2015	Y	9	(fffff)	N	
RP	Watts	957ZQT	3	VUVU	20-Oct-2009	20-Oct-2015	Y	9	(fffff)	N	
RP	Watts	957ZQT	4	VUVU	20-Oct-2009	20-Oct-2015	Y	9	(fffff)	N	
RP	Watts	967N	2 1/2	VUVD	14-Apr-2003	14-Apr-2015	N	9	(ppp),qqq,yyy,zzz,aaaa,bbbb,dddd,eeee,gggg,kkkk,llll,mmmm,nnnn,nnnnn	N	
RP	Watts	967N	3	VUVD	14-Apr-2003	14-Apr-2015	N	9	(ppp),qqq,zzz,aaaa,bbbb,dddd,eeee,ffff,gggg,kkkk,llll,mmmm,nnnn,nnnnn	N	
RP	Watts	967N	4	VUVD	15-Nov-2010	15-Nov-2013	N	9	ppp,qqq,aaaa,bbbb,nnnnn		
RP	Watts	967N	4	VUVD	15-Nov-2010	15-Nov-2013	Y	9	yyy,zzz,dddd,eeee,gggg,kkkk,llll,mmmm,nnnn		
RP	Watts	967N	6	VUVD	14-Jun-2013		N	9	ppp, qqq, aaaa, bbbb,		
RP	Watts	967N	6	VUVD	14-Jun-2013		Y	9	(yyy), zzz, dddd, eeee, gggg, kkkk, llll, mmmm, nnnn		
RP	Watts	967Z	2 1/2	VUVU	14-Apr-2003	14-Apr-2015	N	9	(ppp),qqq,yyy,zzz,aaaa,bbbb,dddd,eeee,gggg,kkkk,llll,mmmm,nnnn,nnnnn	N	
RP	Watts	967Z	3	VUVU	14-Apr-2003	14-Apr-2015	N	9	(ppp),qqq,zzz,aaaa,bbbb,dddd,eeee,gggg,kkkk,llll,mmmm,nnnn,nnnnn	N	
RP	Watts	967Z	6	VUVU	14-Jun-2013		N	9	ppp, qqq, aaaa, bbbb,		
RP	Watts	967Z	6	VUVU	14-Jun-2013		Y	9	(yyy), zzz, dddd, eeee, gggg, kkkk, llll, mmmm, nnnn		
RP	Watts	990	4	H	1-Nov-1992	1-Nov-2013	N	8	oo,gg,hh,pp,tt,uu,yy	Y	
RP	Watts	990	8	H	13-Jan-1993	13-Jan-2014	N	8	oo,gg,hh,pp,tt,uu,yy	Y	
RP	Watts	990QTFDA	4	H	13-Jan-1993	13-Jan-2014	N	8	ww	Y	
RP	Watts	990QTFDA	8	H	13-Jan-1993	13-Jan-2014	N	8	ww	Y	
RP	Watts	992	4	H	1-Nov-1992	1-Nov-2013	N	8	oo	Y	
RP	Watts	992	10	H	13-Jan-1993	13-Jan-2014	N	8	oo	Y	
RP	Watts	995QT	1/2	H	13-Apr-2000	13-Apr-2015	N	9	int	Y	
RP	Watts	995QT	3/4	H	13-Apr-2000	13-Apr-2015	N	9	int	Y	
RP	Watts	995QT	1	H	14-Jan-1999	14-Jan-2014	N	9	int	Y	
RP	Watts	995QT	1 1/4	H	28-Mar-2002	28-Mar-2014	N	9	int	Y	
RP	Watts	995QT	1 1/2	H	28-Mar-2002	28-Mar-2014	N	9	int	Y	
RP	Watts	FAE909HWQT	1 1/4	H	7-Feb-1980	7-Feb-2016	N	5	(vv),xx,ooo,hhhh,pppp	N	
RP	Watts	FAE909HWQT	1 1/2	H	7-Feb-1980	7-Feb-2016	N	5	(vv),xx,ooo,hhhh,pppp	N	
RP	Watts	FAE909HWQT	2	H	7-Feb-1980	7-Feb-2016	N	5	(vv),xx,ooo,hhhh,pppp	N	
RP	Watts	FAE909QT	1 1/4	H	15-Jan-1982	15-Jan-2015	N	6	(vv),xx,ooo,hhhh,pppp	N	
RP	Watts	FAE909QT	1 1/2	H	15-Jan-1982	15-Jan-2015	N	6	(vv),xx,ooo,hhhh,pppp	N	
RP	Watts	FAE909QT	2	H	15-Jan-1982	15-Jan-2015	N	6	(vv),xx,ooo,hhhh,pppp	N	
RP	Watts	LF009	2 1/2	H	12-Jan-2010	12-Jan-2016	Y	9	(oo)	N	
RP	Watts	LF009	3	H	12-Jan-2010	12-Jan-2016	Y	9	(oo)	N	
RP	Watts	LF009M2PCQT	1	H	13-Mar-2015		Y	9	(hhhh),rrrrr	N	
RP	Watts	LF009M2PCQT	2	H	13-Mar-2015		Y	9	(hhhh),rrrrr	N	
RP	Watts	LF009M2QT	1	H	11-Jan-2008	11-Jan-2014	Y	9	(hhhh),rrrrr	N	
RP	Watts	LF009M2QT	1 1/4	H	11-Jan-2008	11-Jan-2014	Y	8	(hhhh),rrrrr	N	
RP	Watts	LF009M2QT	1 1/2	H	11-Jan-2008	11-Jan-2014	Y	8	(hhhh),rrrrr	N	
RP	Watts	LF009M2QT	2	H	11-Jan-2008	11-Jan-2014	Y	9	(hhhh),rrrrr	N	
RP	Watts	LF009M3PCQT	3/4	H	13-Mar-2015		Y	9	(hhhh),rrrrr	N	
RP	Watts	LF009M3QT	3/4	H	11-Jan-2008	11-Jan-2014	Y	9	(hhhh),rrrrr	N	
RP	Watts	LF009PCQT	1/2	H	13-Mar-2015		Y	9	(hhhh),rrrrr	N	
RP	Watts	LF009QT	1/2	H	11-Jan-2008	11-Jan-2014	Y	9	(hhhh),rrrrr	N	
RP	Watts	LF909	2 1/2	H	12-Jan-2010	12-Jan-2016	Y	9	(ll),mm,oo,pp,zzz,cccc,dddd,eeee,ffff,gggg,nnnnn	N	
RP	Watts	LF909	3	H	12-Jan-2010	12-Jan-2016	Y	9	(ll),mm,oo,pp,zzz,cccc,dddd,eeee,ffff,gggg,nnnnn	N	
RP	Watts	LF909	4	H	27-Jul-2012	27-Jul-2015	Y	9	(ll),mm,oo,pp,zzz,cccc,dddd,eeee,ffff,gggg,nnnnn	N	
RP	Watts	LF909	6	H	27-Jul-2012	27-Jul-2015	Y	9	(ll),mm,oo,pp,zzz,cccc,dddd,eeee,ffff,gggg,nnnnn	N	
RP	Watts	LF909M1	8	H	1-Jul-2010	1-Jul-2013	Y	9	(ll),mm,oo,pp,zzz,cccc,dddd,eeee,ffff,gggg,nnnnn	N	
RP	Watts	LF909M1	10	H	1-Jul-2010	1-Jul-2013	Y	9	(ll),mm,oo,pp,zzz,cccc,dddd,eeee,ffff,gggg,nnnnn	N	
RP	Watts	LF909M1PCQT	1 1/4	H	13-Mar-2015		N	9	(hhhh),rrrrr	N	
RP	Watts	LF909M1PCQT	1 1/2	H	13-Mar-2015		N	9	(hhhh),rrrrr	N	
RP	Watts	LF909M1PCQT	2	H	13-Mar-2015		N	9	(hhhh),rrrrr	N	
RP	Watts	LF909M1QT	1 1/4	H	18-Feb-2010	18-Feb-2016	Y	9	(hhhh),rrrrr	N	
RP	Watts	LF909M1QT	1 1/2	H	18-Feb-2010	18-Feb-2016	Y	9	(hhhh),rrrrr	N	
RP	Watts	LF909M1QT	2	H	18-Feb-2010	18-Feb-2016	Y	9	(hhhh),rrrrr	N	
RP	Watts	LF909PCQT	3/4	H	13-Mar-2015		N	9	(hhhh),rrrrr	N	
RP	Watts	LF909PCQT	3/4	VU	13-Mar-2015		N	9	(hhhh),rrrrr	N	
RP	Watts	LF909PCQT	1	H	13-Mar-2015		N	9	(hhhh),rrrrr	N	
RP	Watts	LF909PCQT	1	VU	13-Mar-2015		N	9	(hhhh),rrrrr	N	
RP	Watts	LF909QT	3/4	H	18-Feb-2010	18-Feb-2016	Y	9	(hhhh),rrrrr	N	
RP	Watts	LF909QT	3/4	VU	15-Nov-2010	15-Nov-2013	Y	9	(hhhh),rrrrr		
RP	Watts	LF909QT	1	H	18-Feb-2010	18-Feb-2016	Y	9	(hhhh),rrrrr	N	
RP	Watts	LF909QT	1	VU	15-Nov-2010	15-Nov-2013	Y	9	(hhhh),rrrrr		
RP	Watts	LF919AQT	3/4	VUVD	14-Jun-2006	14-Jun-2015	N	9	(vv),xx,ooo,pppp,rrrrr	N	
RP	Watts	LF919AQT	3/4	VUVD	14-Jun-2006	14-Jun-2015	Y	9	(hhhh),rrrrr	N	
RP	Watts	LF919AQT	1	VUVD	12-Apr-2006	12-Apr-2015	N	9	(vv),xx,ooo,pppp,rrrrr	N	
RP	Watts	LF919AQT	1	VUVD	12-Apr-2006	12-Apr-2015	Y	9	(hhhh),rrrrr	N	
RP	Watts	LF919AQT	1 1/4	VUVD	5-Sep-2006	5-Sep-2015	N	9	(vv),xx,ooo,pppp,rrrrr	N	
RP	Watts	LF919AQT	1 1/4	VUVD	5-Sep-2006	5-Sep-2015	Y	9	(hhhh),rrrrr	N	
RP	Watts	LF919AQT	1 1/2	VUVD	12-Apr-2006	12-Apr-2015	N	9	(vv),xx,ooo,pppp,rrrrr	N	
RP	Watts	LF919AQT	1 1/2	VUVD	12-Apr-2006	12-Apr-2015	Y	9	(hhhh),rrrrr	N	
RP	Watts	LF919AQT	2	VUVD	12-Apr-2006	12-Apr-2015	N	9	(vv),xx,ooo,pppp,rrrrr	N	
RP	Watts	LF919AQT	2	VUVD	12-Apr-2006	12-Apr-2015	Y	9	(hhhh),rrrrr	N	
RP	Watts	LF919QT	3/4	H	14-Jun-2006	14-Jun-2015	N	9	(vv),xx,ooo,pppp,rrrrr	N	
RP	Watts	LF919QT	3/4	H	14-Jun-2006	14-Jun-2015	Y	9	(hhhh),rrrrr	N	
RP	Watts	LF919QT	3/4	VD	30-Aug-2006	30-Aug-2015	N	9	(vv),xx,ooo,pppp,rrrrr	N	
RP	Watts	LF919QT	3/4	VD	30-Aug-2006	30-Aug-2015	Y	9	(hhhh),rrrrr	N	
RP	Watts	LF919QT	1	H	12-Apr-2006	12-Apr-2015	N	9	(vv),xx,ooo,pppp,rrrrr	N	
RP	Watts	LF919QT	1	H	12-Apr-2006	12-Apr-2015	Y	9	(hhhh),rrrrr	N	
RP	Watts	LF919QT	1	VD	30-Aug-2006	30-Aug-2015	N	9	(vv),xx,ooo,pppp,rrrrr	N	
RP	Watts	LF919QT	1	VD	30-Aug-2006	30-Aug-2015	Y	9	(hhhh),rrrrr	N	
RP	Watts	LF919QT	1 1/4	H	12-Apr-2006	12-Apr-2015	N	9	(vv),xx,ooo,pppp,rrrrr	N	
RP	Watts	LF919QT	1 1/4	H	12-Apr-2006	12-Apr-2015	Y	9	(hhhh),rrrrr	N	
RP	Watts	LF919QT	1 1/4	VD	30-Aug-2006	30-Aug-2015	N	9	(vv),xx,ooo,pppp,rrrrr	N	
RP	Watts	LF919QT	1 1/4	VD	30-Aug-2006	30-Aug-2015	Y	9	(hhhh),rrrrr	N	
RP	Watts	LF919QT	1 1/2	H	12-Apr-2006	12-Apr-2015	N	9	(vv),xx,ooo,pppp,rrrrr	N	
RP	Watts	LF919QT	1 1/2	H	12-Apr-2006	12-Apr-2015	Y	9	(hhhh),rrrrr	N	
RP	Watts	LF919QT	1 1/2	VD	30-Aug-2006	30-Aug-2015	N	9	(vv),xx,ooo,pppp,rrrrr	N	
RP	Watts	LF919QT	1 1/2	VD	30-Aug-2006	30-Aug-2015	Y	9	(hhhh),rrrrr	N	
RP	Watts	LF919QT	2	H	12-Apr-2006	12-Apr-2015	N	9	(vv),xx,ooo,pppp,rrrrr	N	
RP	Watts	LF919QT	2	H	12-Apr-2006	12-Apr-2015	Y	9	(hhhh),rrrrr	N	
RP	Watts	LF919QT	2	VD	30-Aug-2006	30-Aug-2015	N	9	(vv),xx,ooo,pppp,rrrrr	N	
RP	Watts	LF919QT	2	VD	30-Aug-2006	30-Aug-2015	Y	9	(hhhh),rrrrr	N	
RP	Watts	LF919ZQT	3/4	VUVU	14-Jun-2006	14-Jun-2015	N	9	(vv),xx,ooo,hhhh,pppp,rrrrr	N	
RP	Watts	LF919ZQT	1	VUVU	12-Apr-2006	12-Apr-2015	N	9	(vv),xx,ooo,hhhh,pppp,rrrrr	N	
RP	Watts	LF919ZQT	1 1/4	VUVU	12-Apr-2006	12-Apr-2015	N	9	(vv),xx,ooo,hhhh,pppp,rrrrr	N	
RP	Watts	LF919ZQT	1 1/2	VUVU	12-Apr-2006	12-Apr-2015	N	9	(vv),xx,ooo,hhhh,pppp,rrrrr	N	
RP	Watts	LF919ZQT	2	VUVU	12-Apr-2006	12-Apr-2015	N	9	(vv),xx,ooo,hhhh,pppp,rrrrr	N	
RP	Watts	LFU919AQT	3/4	VUVD	14-Jun-2006	14-Jun-2015	N	9	(vv),xx,ooo,pppp	N	
RP	Watts	LFU919AQT	3/4	VUVD	14-Jun-2006	14-Jun-2015	Y	9	hhhh	N	
RP	Watts	LFU919AQT	1	VUVD	12-Apr-2006	12-Apr-2015	N	9	(vv),xx,ooo,pppp	N	
RP	Watts	LFU919AQT	1	VUVD	12-Apr-2006	12-Apr-2015	Y	9	hhhh	N	
RP	Watts	LFU919AQT	1 1/4	VUVD	12-Apr-2006	12-Apr-2015	N	9	(vv),xx,ooo,pppp	N	
RP	Watts	LFU919AQT	1 1/4	VUVD	12-Apr-2006	12-Apr-2015	Y	9	hhhh	N	
RP	Watts	LFU919AQT	1 1/2	VUVD	12-Apr-2006	12-Apr-2015	N	9	(vv),xx,ooo,pppp	N	
RP	Watts	LFU919AQT	1 1/2	VUVD	12-Apr-2006	12-Apr-2015	Y	9	hhhh	N	
RP	Watts	LFU919AQT	2	VUVD	12-Apr-2006	12-Apr-2015	N	9	(vv),xx,ooo,pppp	N	
RP	Watts	LFU919AQT	2	VUVD	12-Apr-2006	12-Apr-2015	Y	9	hhhh	N	
RP	Watts	LFU919QT	1	H	12-Apr-2006	12-Apr-2015	N	9	(vv),xx,ooo,pppp	N	
RP	Watts	LFU919QT	1	H	12-Apr-2006	12-Apr-2015	Y	9	hhhh	N	
RP	Watts	LFU919QT	1	VD	30-Aug-2006	30-Aug-2015	N	9	(vv),xx,ooo,pppp	N	
RP	Watts	LFU919QT	1	VD	30-Aug-2006	30-Aug-2015	Y	9	hhhh	N	
RP	Watts	LFU919QT	1 1/4	H	12-Apr-2006	12-Apr-2015	N	9	(vv),xx,ooo,pppp	N	
RP	Watts	LFU919QT	1 1/4	H	12-Apr-2006	12-Apr-2015	Y	9	hhhh	N	
RP	Watts	LFU919QT	1 1/4	VD	30-Aug-2006	30-Aug-2015	N	9	(vv),xx,ooo,pppp	N	
RP	Watts	LFU919QT	1 1/4	VD	30-Aug-2006	30-Aug-2015	Y	9	hhhh	N	
RP	Watts	LFU919QT	1 1/2	H	12-Apr-2006	12-Apr-2015	N	9	(vv),xx,ooo,pppp	N	
RP	Watts	LFU919QT	1 1/2	H	12-Apr-2006	12-Apr-2015	Y	9	hhhh	N	
RP	Watts	LFU919QT	1 1/2	VD	30-Aug-2006	30-Aug-2015	N	9	(vv),xx,ooo,pppp	N	
RP	Watts	LFU919QT	1 1/2	VD	30-Aug-2006	30-Aug-2015	Y	9	hhhh	N	
RP	Watts	LFU919QT	2	H	12-Apr-2006	12-Apr-2015	N	9	(vv),xx,ooo,pppp	N	
RP	Watts	LFU919QT	2	H	12-Apr-2006	12-Apr-2015	Y	9	hhhh	N	

Type	Manufacturer	Model	Size	Orientation(s)	Approved	Renewed	≤0.25% Pb	Manual	Shutoffs	Spare Parts	Bypass
RP	Watts	LFU919QT	2	VD	30-Aug-2006	30-Aug-2015	N	9	(vv),xx,ooo,pppp	N	
RP	Watts	LFU919QT	2	VD	30-Aug-2006	30-Aug-2015	Y	9	hhhh	N	
RP	Watts	SS009M3QT	1/4	H	19-Dec-2001	19-Dec-2013	Y	9	(hhh)	N	
RP	Watts	SS009M3QT	3/8	H	19-Dec-2001	19-Dec-2013	Y	9	(hhh)	N	
RP	Watts	SS009M3QT	1/2	H	19-Dec-2001	19-Dec-2013	Y	9	(hhh)	N	
RP	Watts	SS009M3QT	3/4	H	31-Jul-2001	31-Jul-2013	Y	9	(hhh)	N	
RP	Watts	SS009QT	1	H	18-May-1998	18-May-2013	N	Y	(hhh)	N	
RP	Watts	U009APCQT	3/4	VDVD	10-Dec-1993	10-Dec-2014	N	8	(vv),xx,ooo,hhhh,pppp	N	
RP	Watts	U009APCQT	3/4	VDVU	10-Dec-1993	10-Dec-2014	N	8	(vv),xx,ooo,hhhh,pppp	N	
RP	Watts	U009APCQT	3/4	VUVD	10-Dec-1993	10-Dec-2014	N	8	(vv),xx,ooo,hhhh,pppp	N	
RP	Watts	U009APCQT	3/4	VUVU	10-Dec-1993	10-Dec-2014	N	8	(vv),xx,ooo,hhhh,pppp	N	
RP	Watts	U009APCQT	1	VDVD	10-Dec-1993	10-Dec-2014	N	8	vv,xx,ooo,hhhh,pppp	Y	
RP	Watts	U009APCQT	1	VDVU	10-Dec-1993	10-Dec-2014	N	8	vv,xx,ooo,hhhh,pppp	Y	
RP	Watts	U009APCQT	1	VUVD	10-Dec-1993	10-Dec-2014	N	8	vv,xx,ooo,hhhh,pppp	Y	
RP	Watts	U009APCQT	1	VUVU	10-Dec-1993	10-Dec-2014	N	8	vv,xx,ooo,hhhh,pppp	Y	
RP	Watts	U009AQT	3/4	VDVD	12-Jun-1992	12-Jun-2013	N	8	(vv),xx,ooo,hhhh,pppp	N	
RP	Watts	U009AQT	3/4	VDVU	12-Jun-1992	12-Jun-2013	N	8	(vv),xx,ooo,hhhh,pppp	N	
RP	Watts	U009AQT	3/4	VUVD	12-Jun-1992	12-Jun-2013	N	8	(vv),xx,ooo,hhhh,pppp	N	
RP	Watts	U009AQT	3/4	VUVU	12-Jun-1992	12-Jun-2013	N	8	(vv),xx,ooo,hhhh,pppp	N	
RP	Watts	U009AQT	1	VDVD	12-Jun-1992	12-Jun-2013	N	8	vv,xx,ooo,hhhh,pppp	Y	
RP	Watts	U009AQT	1	VDVU	12-Jun-1992	12-Jun-2013	N	8	vv,xx,ooo,hhhh,pppp	Y	
RP	Watts	U009AQT	1	VUVD	12-Jun-1992	12-Jun-2013	N	8	vv,xx,ooo,hhhh,pppp	Y	
RP	Watts	U009AQT	1	VUVU	12-Jun-1992	12-Jun-2013	N	8	vv,xx,ooo,hhhh,pppp	Y	
RP	Watts	U009M1APCQT	1 1/2	VDVD	27-Sep-1994	27-Sep-2015	N	8	vv,xx,ooo,hhhh,pppp	Y	
RP	Watts	U009M1APCQT	1 1/2	VDVU	27-Sep-1994	27-Sep-2015	N	8	vv,xx,ooo,hhhh,pppp	Y	
RP	Watts	U009M1APCQT	1 1/2	VUVD	27-Sep-1994	27-Sep-2015	N	8	vv,xx,ooo,hhhh,pppp	Y	
RP	Watts	U009M1APCQT	1 1/2	VUVU	27-Sep-1994	27-Sep-2015	N	8	vv,xx,ooo,hhhh,pppp	Y	
RP	Watts	U009M1APCQT	2	VDVD	27-Sep-1994	27-Sep-2015	N	8	vv,xx,ooo,hhhh,pppp	Y	
RP	Watts	U009M1APCQT	2	VDVU	27-Sep-1994	27-Sep-2015	N	8	vv,xx,ooo,hhhh,pppp	Y	
RP	Watts	U009M1APCQT	2	VUVD	27-Sep-1994	27-Sep-2015	N	8	vv,xx,ooo,hhhh,pppp	Y	
RP	Watts	U009M1APCQT	2	VUVU	27-Sep-1994	27-Sep-2015	N	8	vv,xx,ooo,hhhh,pppp	Y	
RP	Watts	U009M1AQT	1 1/2	VDVD	16-Dec-1992	16-Dec-2013	N	8	vv,xx,ooo,hhhh,pppp	Y	
RP	Watts	U009M1AQT	1 1/2	VDVU	16-Dec-1992	16-Dec-2013	N	8	vv,xx,ooo,hhhh,pppp	Y	
RP	Watts	U009M1AQT	1 1/2	VUVD	16-Dec-1992	16-Dec-2013	N	8	vv,xx,ooo,hhhh,pppp	Y	
RP	Watts	U009M1AQT	1 1/2	VUVU	16-Dec-1992	16-Dec-2013	N	8	vv,xx,ooo,hhhh,pppp	Y	
RP	Watts	U009M1AQT	2	VDVD	9-Nov-1992	9-Nov-2013	N	8	vv,xx,ooo,hhhh,pppp	Y	
RP	Watts	U009M1AQT	2	VDVU	9-Nov-1992	9-Nov-2013	N	8	vv,xx,ooo,hhhh,pppp	Y	
RP	Watts	U009M1AQT	2	VUVD	9-Nov-1992	9-Nov-2013	N	8	vv,xx,ooo,hhhh,pppp	Y	
RP	Watts	U009M1AQT	2	VUVU	9-Nov-1992	9-Nov-2013	N	8	vv,xx,ooo,hhhh,pppp	Y	
RP	Watts	U009M1PCQT	1 1/4	H	27-Sep-1994	27-Sep-2015	N	8	(vv),xx,ooo,hhhh,pppp	N	
RP	Watts	U009M1PCQT	1 1/2	H	27-Sep-1994	27-Sep-2015	N	8	(vv),xx,ooo,hhhh,pppp	N	
RP	Watts	U009M1PCQT	2	H	27-Sep-1994	27-Sep-2015	N	8	(vv),xx,ooo,hhhh,pppp	N	
RP	Watts	U009M1QT	1 1/4	H	30-Jun-1992	30-Jun-2013	N	8	(vv),xx,ooo,hhhh,pppp	N	
RP	Watts	U009M1QT	1 1/2	H	30-Jun-1992	30-Jun-2013	N	8	vv,xx,ooo,hhhh,pppp	Y	
RP	Watts	U009M1QT	2	H	30-Jun-1992	30-Jun-2013	N	8	vv,xx,ooo,hhhh,pppp	Y	
RP	Watts	U009M2APCQT	1	VDVD	15-Jan-1999	15-Jan-2014	N	9	(vv),xx,ooo,hhhh,pppp	N	
RP	Watts	U009M2APCQT	1	VDVU	15-Jan-1999	15-Jan-2014	N	9	(vv),xx,ooo,hhhh,pppp	N	
RP	Watts	U009M2APCQT	1	VUVD	15-Jan-1999	15-Jan-2014	N	9	(vv),xx,ooo,hhhh,pppp	N	
RP	Watts	U009M2APCQT	1	VUVU	15-Jan-1999	15-Jan-2014	N	9	(vv),xx,ooo,hhhh,pppp	N	
RP	Watts	U009M2APCQT	1 1/2	VDVD	12-Sep-1994	12-Sep-2015	N	8	(vv),xx,ooo,hhhh,pppp	N	
RP	Watts	U009M2APCQT	1 1/2	VDVU	12-Sep-1994	12-Sep-2015	N	8	(vv),xx,ooo,hhhh,pppp	N	
RP	Watts	U009M2APCQT	1 1/2	VUVD	12-Sep-1994	12-Sep-2015	N	8	(vv),xx,ooo,hhhh,pppp	N	
RP	Watts	U009M2APCQT	1 1/2	VUVU	12-Sep-1994	12-Sep-2015	N	8	(vv),xx,ooo,hhhh,pppp	N	
RP	Watts	U009M2APCQT	2	VDVD	26-Aug-1997	26-Aug-2015	N	9	(vv),xx,ooo,hhhh,pppp	N	
RP	Watts	U009M2APCQT	2	VDVU	26-Aug-1997	26-Aug-2015	N	9	(vv),xx,ooo,hhhh,pppp	N	
RP	Watts	U009M2APCQT	2	VUVD	26-Aug-1997	26-Aug-2015	N	9	(vv),xx,ooo,hhhh,pppp	N	
RP	Watts	U009M2APCQT	2	VUVU	26-Aug-1997	26-Aug-2015	N	9	(vv),xx,ooo,hhhh,pppp	N	
RP	Watts	U009M2AQT	1	VDVD	15-Jan-1999	15-Jan-2014	N	9	(vv),xx,ooo,hhhh,pppp	N	
RP	Watts	U009M2AQT	1	VDVU	15-Jan-1999	15-Jan-2014	N	9	(vv),xx,ooo,hhhh,pppp	N	
RP	Watts	U009M2AQT	1	VUVD	15-Jan-1999	15-Jan-2014	N	9	(vv),xx,ooo,hhhh,pppp	N	
RP	Watts	U009M2AQT	1	VUVU	15-Jan-1999	15-Jan-2014	N	9	(vv),xx,ooo,hhhh,pppp	N	
RP	Watts	U009M2AQT	1 1/2	VDVD	24-Aug-1993	24-Aug-2014	N	8	(vv),xx,ooo,hhhh,pppp	N	
RP	Watts	U009M2AQT	1 1/2	VDVU	24-Aug-1993	24-Aug-2014	N	8	(vv),xx,ooo,hhhh,pppp	N	
RP	Watts	U009M2AQT	1 1/2	VUVD	24-Aug-1993	24-Aug-2014	N	8	(vv),xx,ooo,hhhh,pppp	N	
RP	Watts	U009M2AQT	1 1/2	VUVU	24-Aug-1993	24-Aug-2014	N	8	(vv),xx,ooo,hhhh,pppp	N	
RP	Watts	U009M2AQT	2	VDVD	26-Aug-1997	26-Aug-2015	N	9	(vv),xx,ooo,hhhh,pppp	N	
RP	Watts	U009M2AQT	2	VDVU	26-Aug-1997	26-Aug-2015	N	9	(vv),xx,ooo,hhhh,pppp	N	
RP	Watts	U009M2AQT	2	VUVD	26-Aug-1997	26-Aug-2015	N	9	(vv),xx,ooo,hhhh,pppp	N	
RP	Watts	U009M2AQT	2	VUVU	26-Aug-1997	26-Aug-2015	N	9	(vv),xx,ooo,hhhh,pppp	N	
RP	Watts	U009M2PCQT	1	H	15-Jan-1999	15-Jan-2014	N	9	(vv),xx,ooo,hhhh,pppp	N	
RP	Watts	U009M2PCQT	1 1/2	H	12-Sep-1994	12-Sep-2015	N	8	(vv),xx,ooo,hhhh,pppp	N	
RP	Watts	U009M2PCQT	2	H	26-Aug-1997	26-Aug-2015	N	9	(vv),xx,ooo,hhhh,pppp	N	
RP	Watts	U009M2QT	3/4	H	16-Nov-1992	16-Nov-2013	N	8	(vv),xx,ooo,hhhh,pppp	N	
RP	Watts	U009M2QT	1	H	15-Jan-1999	15-Jan-2014	N	9	(vv),xx,ooo,hhhh,pppp	N	
RP	Watts	U009M2QT	1 1/2	H	24-Aug-1993	24-Aug-2014	N	8	(vv),xx,ooo,hhhh,pppp	N	
RP	Watts	U009M2QT	2	H	26-Aug-1997	26-Aug-2015	N	9	(vv),xx,ooo,hhhh,pppp	N	
RP	Watts	U009PCQT	1/2	H	2-Feb-1995	2-Feb-2016	N	8	(vv),xx,ooo,hhhh,pppp	N	
RP	Watts	U009PCQT	3/4	H	10-Dec-1993	10-Dec-2014	N	8	(vv),xx,ooo,hhhh,pppp	N	
RP	Watts	U009PCQT	1	H	10-Dec-1993	10-Dec-2014	N	8	vv,xx,ooo,hhhh,pppp	Y	
RP	Watts	U009PCQT	1 1/4	H	27-Sep-1994	27-Sep-2015	N	8	vv,xx,ooo,hhhh,pppp	Y	
RP	Watts	U009PCQT	1 1/2	H	27-Sep-1994	27-Sep-2015	N	8	vv,xx,ooo,hhhh,pppp	Y	
RP	Watts	U009PCQT	2	H	27-Sep-1994	27-Sep-2015	N	8	vv,xx,ooo,hhhh,pppp	Y	
RP	Watts	U009QT	1/2	H	2-Feb-1995	2-Feb-2016	N	8	(vv),xx,ooo,hhhh,pppp	N	
RP	Watts	U009QT	3/4	H	11-Jan-1988	11-Jan-2015	N	7	vv,xx,ooo,hhhh,pppp	Y	
RP	Watts	U009QT	1	H	11-Jan-1988	11-Jan-2015	N	7	vv,xx,ooo,hhhh,pppp	Y	
RP	Watts	U009QT	1 1/4	H	9-Aug-1988	9-Aug-2015	N	7	vv,xx,ooo,hhhh,pppp	Y	
RP	Watts	U009QT	1 1/2	H	9-Aug-1988	9-Aug-2015	N	7	vv,xx,ooo,hhhh,pppp	Y	
RP	Watts	U009QT	2	H	9-Aug-1988	9-Aug-2015	N	7	vv,xx,ooo,hhhh,pppp	Y	
RP	Watts	U009SSPCQT	3/4	H	10-Dec-1993	10-Dec-2014	N	8	vv,xx,pppp	Y	
RP	Watts	U009SSPCQT	1	H	10-Dec-1993	10-Dec-2014	N	8	vv,xx,pppp	Y	
RP	Watts	U009SSPCQT	1 1/4	H	27-Sep-1994	27-Sep-2015	N	8	vv,xx,pppp	Y	
RP	Watts	U009SSPCQT	1 1/2	H	27-Sep-1994	27-Sep-2015	N	8	vv,xx,pppp	Y	
RP	Watts	U009SSPCQT	2	H	27-Sep-1994	27-Sep-2015	N	8	vv,xx,pppp	Y	
RP	Watts	U009SSQT	3/4	H	11-Jan-1988	11-Jan-2015	N	7	vv,xx,pppp	Y	
RP	Watts	U009SSQT	1	H	11-Jan-1988	11-Jan-2015	N	7	vv,xx,pppp	Y	
RP	Watts	U009SSQT	1 1/4	H	9-Aug-1988	9-Aug-2015	N	7	vv,xx,pppp	Y	
RP	Watts	U009SSQT	1 1/2	H	9-Aug-1988	9-Aug-2015	N	7	vv,xx,pppp	Y	
RP	Watts	U009SSQT	2	H	9-Aug-1988	9-Aug-2015	N	7	vv,xx,pppp	Y	
RP	Watts	U909HWQT	3/4	H	29-Sep-1979	29-Sep-2015	N	5	(vv),xx,ooo,hhhh,pppp	N	
RP	Watts	U909HWQT	1	H	29-Sep-1979	29-Sep-2015	N	5	(vv),xx,ooo,hhhh,pppp	N	
RP	Watts	U909QT	3/4	H	9-Oct-1998	9-Oct-2013	N	9	(vv),xx,ooo,hhhh,pppp	N	
RP	Watts	U909QT	3/4	VU	9-Oct-1998	9-Oct-2013	N	9	(vv),xx,ooo,hhhh,pppp	N	
RP	Watts	U909QT	1	H	9-Oct-1998	9-Oct-2013	N	9	(vv),xx,ooo,hhhh,pppp	N	
RP	Watts	U909QT	1	VU	9-Oct-1998	9-Oct-2013	N	9	(vv),xx,ooo,hhhh,pppp	N	
RP	Watts	U919AQT	3/4	VUVD	14-Jun-2006	14-Jun-2015	N	9	(vv),xx,ooo,hhhh,pppp	N	
RP	Watts	U919AQT	1	VUVD	1-Jun-2006	1-Jun-2015	N	9	(vv),xx,ooo,hhhh,pppp	N	
RP	Watts	U919AQT	1 1/4	VUVD	1-Jun-2006	1-Jun-2015	N	9	(vv),xx,ooo,hhhh,pppp	N	
RP	Watts	U919AQT	1 1/2	VUVD	1-Jun-2006	1-Jun-2015	N	9	(vv),xx,ooo,hhhh,pppp	N	
RP	Watts	U919AQT	2	VUVD	1-Jun-2006	1-Jun-2015	N	9	(vv),xx,ooo,hhhh,pppp	N	
RP	Watts	U919QT	1	H	1-Jun-2006	1-Jun-2015	N	9	(vv),xx,ooo,hhhh,pppp	N	
RP	Watts	U919QT	1	VD	30-Aug-2006	30-Aug-2015	N	9	(vv),xx,ooo,hhhh,pppp	N	
RP	Watts	U919QT	1 1/4	H	1-Jun-2006	1-Jun-2015	N	9	(vv),xx,ooo,hhhh,pppp	N	
RP	Watts	U919QT	1 1/4	VD	30-Aug-2006	30-Aug-2015	N	9	(vv),xx,ooo,hhhh,pppp	N	
RP	Watts	U919QT	1 1/2	H	1-Jun-2006	1-Jun-2015	N	9	(vv),xx,ooo,hhhh,pppp	N	
RP	Watts	U919QT	1 1/2	VD	30-Aug-2006	30-Aug-2015	N	9	(vv),xx,ooo,hhhh,pppp	N	
RP	Watts	U919QT	2	H	1-Jun-2006	1-Jun-2015	N	9	(vv),xx,ooo,hhhh,pppp	N	
RP	Watts	U919QT	2	VD	30-Aug-2006	30-Aug-2015	N	9	(vv),xx,ooo,hhhh,pppp	N	
RP	Wilkins	375	3/4	H	9-Mar-2007	9-Mar-2016	N	9	(int)	N	
RP	Wilkins	375	1	H	9-Mar-2007	9-Mar-2016	N	9	(int)	N	
RP	Wilkins	375	1 1/4	H	20-Apr-2010	20-Apr-2013	N	9	(int)	N	
RP	Wilkins	375	1 1/2	H	20-Apr-2010	20-Apr-2013	N	9	(int)	N	
RP	Wilkins	375	2	H	20-Apr-2010	20-Apr-2013	N	9	(int)	N	
RP	Wilkins	375	2 1/2	H	9-Sep-2010	9-Sep-2013	Y	9	(gg),hh,ppp,qqq,ssss,tttt,vvvv,wwww,yyyy,zzzz,kkkkk	N	
RP	Wilkins	375	2 1/2	H	28-Sep-2001	28-Sep-2013	N	9	(gg),ee,ff,hh,ll,mm,tt,uu,yy,zz,ppp,qqq,zzz,dddd,ssss,tttt,vvvv,wwww,yyyy,zzzz,kkkkk	N	
RP	Wilkins	375	3	H	9-Sep-2010	9-Sep-2013	Y	9	(gg),hh,ppp,qqq,ssss,tttt,vvvv,wwww,yyyy,zzzz,kkkkk	N	

Type	Manufacturer	Model	Size	Orientation(s)	Approved	Renewed	≤0.25% Pb	Manual	Shutoffs	Spare Parts	Bypass
RP	Wilkins	375	3	H	28-Sep-2001	28-Sep-2013	N	9	(gg),ee,ff,hh,ll,mm,tt,uu,yy,zz,ppp,qqq,zzz,dddd,ssss,tttt,vvvv,wwww,yyyy,zzzz,kkkkk	N	
RP	Wilkins	375	4	H	9-Sep-2010	9-Sep-2013	Y	9	(gg),hh,ppp,qqq,vvv,www,ssss,tttt,vvvv,wwww,yyyy,zzzz,kkkkk	N	
RP	Wilkins	375	4	H	27-Mar-2000	27-Mar-2015	N	9	(gg),ee,ff,hh,ll,mm,tt,uu,yy,zz,ppp,qqq,vvv,www,zzz,dddd,eeee,ssss,tttt,vvvv,wwww,yyyy,zzzz,kkkkk	N	
RP	Wilkins	375	6	H	9-Sep-2010	9-Sep-2013	Y	9	(gg),hh,ppp,qqq,vvv,www,ssss,tttt,vvvv,wwww,yyyy,zzzz,kkkkk	N	
RP	Wilkins	375	6	H	27-Jul-2000	27-Jul-2015	N	9	(gg),ee,ff,hh,ll,mm,tt,uu,yy,zz,ppp,qqq,vvv,www,zzz,dddd,eeee,ssss,tttt,vvvv,wwww,yyyy,zzzz,kkkkk	N	
RP	Wilkins	375	8	H	9-Sep-2010	9-Sep-2013	Y	9	(gg),hh,ppp,qqq,vvv,www,ssss,tttt,vvvv,wwww,yyyy,zzzz,kkkkk	N	
RP	Wilkins	375	8	H	11-Nov-2002	11-Nov-2014	N	9	(gg),ee,ff,hh,ll,mm,tt,uu,yy,zz,ppp,qqq,vvv,www,zzz,dddd,eeee,ssss,tttt,vvvv,wwww,yyyy,zzzz,kkkkk	N	
RP	Wilkins	375	10	H	9-Sep-2010	9-Sep-2013	Y	9	(gg),hh,ppp,qqq,vvv,www,ssss,tttt,vvvv,wwww,yyyy,zzzz,kkkkk	N	
RP	Wilkins	375	10	H	22-Nov-2004	22-Nov-2013	N	9	(gg),ee,ff,hh,ll,mm,tt,uu,yy,zz,ppp,qqq,vvv,www,zzz,dddd,eeee,ssss,tttt,vvvv,wwww,yyyy,zzzz,kkkkk	N	
RP	Wilkins	475	2 1/2	VUVD	9-Sep-2010	9-Sep-2013	Y	9	(gg),hh,ppp,qqq,ssss,uuuu,vvvv,xxxx,yyyy,aaaaa,kkkkk	N	
RP	Wilkins	475	2 1/2	VUVD	24-Jan-2002	24-Jan-2014	N	9	(gg),ee,ff,hh,ll,mm,tt,uu,yy,zz,ppp,qqq,zzz,dddd,ssss,uuuu,vvvv,xxxx,yyyy,aaaaa,kkkkk	N	
RP	Wilkins	475	3	VUVD	9-Sep-2010	9-Sep-2013	Y	9	(gg),hh,ppp,qqq,ssss,uuuu,vvvv,xxxx,yyyy,aaaaa,kkkkk,llllll	N	
RP	Wilkins	475	3	VUVD	24-Jan-2002	24-Jan-2014	N	9	(gg),ee,ff,hh,ll,mm,tt,uu,yy,zz,ppp,qqq,zzz,dddd,ssss,uuuu,vvvv,xxxx,yyyy,aaaaa,kkkkk,llllll	N	
RP	Wilkins	475	4	VUVD	9-Sep-2010	9-Sep-2013	Y	9	(ppp),qqq,sss,ttt,www,yyy,ssss,uuuu,vvvv,xxxx,yyyy,aaaaa,kkkkk,llllll	N	
RP	Wilkins	475	4	VUVD	27-Jul-2000	27-Jul-2015	N	9	(ppp),qqq,sss,ttt,www,yyy,zzz,dddd,eeee,ssss,uuuu,vvvv,xxxx,yyyy,aaaaa,kkkkk,llllll	N	
RP	Wilkins	475	6	VUVD	9-Sep-2010	9-Sep-2013	Y	9	(ppp),qqq,sss,ttt,www,yyy,ssss,uuuu,vvvv,xxxx,yyyy,aaaaa,kkkkk,llllll	N	
RP	Wilkins	475	6	VUVD	27-Jul-2000	27-Jul-2015	N	9	(ppp),qqq,sss,ttt,www,yyy,zzz,dddd,eeee,ssss,uuuu,vvvv,xxxx,yyyy,aaaaa,kkkkk,llllll	N	
RP	Wilkins	475	8	VUVD	9-Sep-2010	9-Sep-2013	Y	9	(ppp),qqq,sss,ttt,www,yyy,ssss,uuuu,vvvv,xxxx,yyyy,aaaaa,kkkkk,llllll	N	
RP	Wilkins	475	8	VUVD	3-Jul-2003	3-Jul-2015	N	9	(ppp),qqq,sss,ttt,www,yyy,zzz,dddd,eeee,ssss,uuuu,vvvv,xxxx,yyyy,aaaaa,kkkkk,llllll	N	
RP	Wilkins	475	10	VUVD	9-Sep-2010	9-Sep-2013	Y	9	(ppp),qqq,sss,ttt,www,ssss,uuuu,vvvv,xxxx,yyyy,aaaaa,kkkkk,llllll	N	
RP	Wilkins	475	10	VUVD	22-Nov-2004	22-Nov-2013	N	9	(ppp),qqq,sss,ttt,www,zzz,dddd,eeee,ssss,uuuu,vvvv,xxxx,yyyy,aaaaa,kkkkk,llllll	N	
RP	Wilkins	975	8	H	6-Feb-1995	6-Feb-2016	N	8	(gg),ee,ff,hh,tt,uu,yy,zz,ppp,ssss,tttt,vvvv,wwww,yyyy,zzzz	N	
RP	Wilkins	975	10	H	6-Feb-1995	6-Feb-2016	N	8	(gg),ee,ff,hh,tt,uu,yy,zz,ppp,ssss,tttt,vvvv,wwww,yyyy,zzzz	N	
RP	Wilkins	375	1/2	H	6-Apr-2011	6-Apr-2014	N	9	(int)	N	
RP	Wilkins	375A	2 1/2	H	9-Sep-2010	9-Sep-2013	Y	9	(ppp),qqq,sss,ttt,yyy,ssss,uuuu,vvvv,xxxx,yyyy,aaaaa,kkkkk,llllll	N	
RP	Wilkins	375A	2 1/2	H	20-Oct-2008	20-Oct-2014	N	9	(ppp),qqq,sss,ttt,yyy,zzz,dddd,ssss,uuuu,vvvv,xxxx,yyyy,aaaaa,kkkkk,llllll	N	
RP	Wilkins	375A	3	H	9-Sep-2010	9-Sep-2013	Y	9	(ppp),qqq,sss,ttt,yyy,ssss,uuuu,vvvv,xxxx,yyyy,aaaaa,kkkkk,llllll	N	
RP	Wilkins	375A	3	H	20-Oct-2008	20-Oct-2014	N	9	(ppp),qqq,sss,ttt,yyy,zzz,dddd,ssss,uuuu,vvvv,xxxx,yyyy,aaaaa,kkkkk,llllll	N	
RP	Wilkins	375A	4	H	2-Jun-2004	2-Jun-2013	N	9	(ppp),qqq,sss,ttt,www,yyy,zzz,dddd,eeee,ssss,uuuu,vvvv,xxxx,yyyy,aaaaa,kkkkk,llllll	N	
RP	Wilkins	375A	4	H	9-Sep-2010	9-Sep-2013	Y	9	(ppp),qqq,sss,ttt,www,yyy,zzz,ssss,uuuu,vvvv,xxxx,yyyy,aaaaa,kkkkk,llllll	N	
RP	Wilkins	375A	6	H	9-Sep-2010	9-Sep-2013	Y	9	(ppp),qqq,sss,ttt,www,yyy,zzz,ssss,uuuu,vvvv,xxxx,yyyy,aaaaa,kkkkk,llllll	N	
RP	Wilkins	375A	6	H	25-Nov-2003	25-Nov-2015	N	9	(ppp),qqq,sss,ttt,www,yyy,zzz,dddd,eeee,ssss,uuuu,vvvv,xxxx,yyyy,aaaaa,kkkkk,llllll	N	
RP	Wilkins	375A	8	H	15-Jun-2004	15-Jun-2013	N	9	(ppp),qqq,sss,ttt,www,yyy,zzz,dddd,eeee,ssss,uuuu,vvvv,xxxx,yyyy,aaaaa,kkkkk,llllll	N	
RP	Wilkins	375A	8	H	9-Sep-2010	9-Sep-2013	Y	9	(ppp),qqq,sss,ttt,www,yyy,ssss,uuuu,vvvv,xxxx,yyyy,aaaaa,kkkkk,llllll	N	
RP	Wilkins	375A	10	H	9-Sep-2010	9-Sep-2013	Y	9	(ppp),qqq,sss,ttt,www,yyy,ssss,uuuu,vvvv,xxxx,yyyy,aaaaa,kkkkk,llllll	N	
RP	Wilkins	375A	10	H	2-Mar-2007	2-Mar-2016	N	9	(ppp),qqq,sss,ttt,www,yyy,zzz,dddd,eeee,ssss,uuuu,vvvv,xxxx,yyyy,aaaaa,kkkkk,llllll	N	
RP	Wilkins	375AMS	2 1/2	H	5-Nov-2014		Y	9	(ppp),qqq,sss,ttt,www,yyy,zzz,ssss,uuuu,vvvv,xxxx,yyyy,aaaaa,kkkkk,llllll	N	
RP	Wilkins	375AMS	3	H	5-Nov-2014		Y	9	(ppp),qqq,sss,ttt,www,yyy,zzz,ssss,uuuu,vvvv,xxxx,yyyy,aaaaa,kkkkk,llllll	N	
RP	Wilkins	375AMS	4	H	5-Nov-2014		Y	9	(ppp),qqq,sss,ttt,www,yyy,zzz,ssss,uuuu,vvvv,xxxx,yyyy,aaaaa,kkkkk,llllll	N	
RP	Wilkins	375AMS	6	H	5-Nov-2014		Y	9	(ppp),qqq,sss,ttt,www,yyy,zzz,ssss,uuuu,vvvv,xxxx,yyyy,aaaaa,kkkkk,llllll	N	
RP	Wilkins	375AMS	8	H	5-Nov-2014		Y	9	(ppp),qqq,sss,ttt,www,yyy,ssss,uuuu,vvvv,xxxx,yyyy,aaaaa,kkkkk,llllll	N	
RP	Wilkins	375AMS	10	H	5-Nov-2014		Y	9	(ppp),qqq,sss,ttt,www,yyy,zzz,ssss,uuuu,vvvv,xxxx,yyyy,aaaaa,kkkkk,llllll	N	
RP	Wilkins	375AR	2 1/2	H	16-Jun-2010	16-Jun-2013	N	9	(ppp),qqq,sss,ttt,yyy,zzz,dddd,ssss,uuuu,vvvv,xxxx,yyyy,aaaaa,kkkkk,llllll	N	
RP	Wilkins	375AR	2 1/2	H	9-Sep-2010	9-Sep-2013	Y	9	(ppp),qqq,sss,ttt,yyy,ssss,uuuu,vvvv,xxxx,yyyy,aaaaa,kkkkk,llllll	N	
RP	Wilkins	375AR	3	H	16-Jun-2010	16-Jun-2013	N	9	(ppp),qqq,sss,ttt,yyy,zzz,dddd,ssss,uuuu,vvvv,xxxx,yyyy,aaaaa,kkkkk,llllll	N	
RP	Wilkins	375AR	3	H	9-Sep-2010	9-Sep-2013	Y	9	(ppp),qqq,sss,ttt,yyy,ssss,uuuu,vvvv,xxxx,yyyy,aaaaa,kkkkk,llllll	N	
RP	Wilkins	375AR	4	H	9-Sep-2010	9-Sep-2013	Y	9	(ppp),qqq,sss,ttt,www,yyy,zzz,dddd,eeee,ssss,uuuu,vvvv,xxxx,yyyy,aaaaa,kkkkk,llllll	N	
RP	Wilkins	375AR	4	H	25-Mar-2010	25-Mar-2016	N	9	(ppp),qqq,sss,ttt,www,yyy,zzz,dddd,eeee,ssss,uuuu,vvvv,xxxx,yyyy,aaaaa,kkkkk,llllll	N	
RP	Wilkins	375AR	6	H	9-Sep-2010	9-Sep-2013	Y	9	(ppp),qqq,sss,ttt,www,yyy,zzz,dddd,eeee,ssss,uuuu,vvvv,xxxx,yyyy,aaaaa,kkkkk,llllll	N	
RP	Wilkins	375AR	6	H	25-Mar-2010	25-Mar-2016	N	9	(ppp),qqq,sss,ttt,www,yyy,zzz,dddd,eeee,ssss,uuuu,vvvv,xxxx,yyyy,aaaaa,kkkkk,llllll	N	
RP	Wilkins	375AR	8	H	9-Sep-2010	9-Sep-2013	Y	9	(ppp),qqq,sss,ttt,www,yyy,zzz,dddd,eeee,ssss,uuuu,vvvv,xxxx,yyyy,aaaaa,kkkkk,llllll	N	
RP	Wilkins	375AR	8	H	25-Mar-2010	25-Mar-2016	N	9	(ppp),qqq,sss,ttt,www,yyy,zzz,dddd,eeee,ssss,uuuu,vvvv,xxxx,yyyy,aaaaa,kkkkk,llllll	N	
RP	Wilkins	375AR	10	H	9-Sep-2010	9-Sep-2013	Y	9	(ppp),qqq,sss,ttt,www,yyy,zzz,dddd,eeee,ssss,uuuu,vvvv,xxxx,yyyy,aaaaa,kkkkk,llllll	N	
RP	Wilkins	375AR	10	H	25-Mar-2010	25-Mar-2016	N	9	(ppp),qqq,sss,ttt,www,yyy,zzz,dddd,eeee,ssss,uuuu,vvvv,xxxx,yyyy,aaaaa,kkkkk,llllll	N	
RP	Wilkins	375ARMS	2 1/2	H	5-Nov-2014		Y	9	(ppp),qqq,sss,ttt,yyy,ssss,uuuu,vvvv,xxxx,yyyy,aaaaa,kkkkk,llllll	N	
RP	Wilkins	375ARMS	3	H	5-Nov-2014		Y	9	(ppp),qqq,sss,ttt,yyy,ssss,uuuu,vvvv,xxxx,yyyy,aaaaa,kkkkk,llllll	N	
RP	Wilkins	375ARMS	4	H	5-Nov-2014		Y	9	(ppp),qqq,sss,ttt,www,yyy,zzz,dddd,eeee,ssss,uuuu,vvvv,xxxx,yyyy,aaaaa,kkkkk,llllll	N	
RP	Wilkins	375ARMS	6	H	5-Nov-2014		Y	9	(ppp),qqq,sss,ttt,www,yyy,zzz,dddd,eeee,ssss,uuuu,vvvv,xxxx,yyyy,aaaaa,kkkkk,llllll	N	
RP	Wilkins	375ARMS	8	H	5-Nov-2014		Y	9	(ppp),qqq,sss,ttt,www,yyy,zzz,dddd,eeee,ssss,uuuu,vvvv,xxxx,yyyy,aaaaa,kkkkk,llllll	N	
RP	Wilkins	375ARMS	10	H	5-Nov-2014		Y	9	(ppp),qqq,sss,ttt,www,yyy,zzz,dddd,eeee,ssss,uuuu,vvvv,xxxx,yyyy,aaaaa,kkkkk,llllll	N	
RP	Wilkins	375ARXL	2 1/2	H	16-Jun-2010	16-Jun-2013	Y	9	(ppp),sss,ttt,qqq,yyy,zzz,dddd	N	
RP	Wilkins	375ARXL	3	H	16-Jun-2010	16-Jun-2013	Y	9	(ppp),sss,ttt,qqq,yyy,zzz,dddd	N	
RP	Wilkins	375ARXL	4	H	16-Jun-2010	16-Jun-2013	Y	9	(ppp),qqq,sss,ttt,www,yyy,zzz,dddd,eeee,ssss,uuuu,vvvv,xxxx,yyyy,aaaaa	N	
RP	Wilkins	375ARXL	6	H	16-Jun-2010	16-Jun-2013	Y	9	(ppp),qqq,sss,ttt,www,yyy,zzz,dddd,eeee,ssss,uuuu,vvvv,xxxx,yyyy,aaaaa	N	
RP	Wilkins	375ARXL	8	H	16-Jun-2010	16-Jun-2013	Y	9	(ppp),qqq,sss,ttt,www,yyy,zzz,dddd,eeee,ssss,uuuu,vvvv,xxxx,yyyy,aaaaa	N	
RP	Wilkins	375ARXL	10	H	16-Jun-2010	16-Jun-2013	Y	9	(ppp),qqq,sss,ttt,www,yyy,zzz,dddd,eeee,ssss,uuuu,vvvv,xxxx,yyyy,aaaaa	N	
RP	Wilkins	375AST	2 1/2	H	12-Jun-2015		Y	10	(yyy),ssss,uuuu,vvvv,xxxx,yyyy,aaaaa,kkkkk,llllll	N	
RP	Wilkins	375AST	3	H	12-Jun-2015		Y	10	(yyy),ssss,uuuu,vvvv,xxxx,yyyy,aaaaa,kkkkk,llllll	N	
RP	Wilkins	375AST	4	H	31-May-2012	31-May-2015	Y	10	(yyy),ssss,uuuu,vvvv,xxxx,yyyy,aaaaa,kkkkk,llllll	N	
RP	Wilkins	375AST	6	H	24-Jun-2013		Y	10	(yyy),ssss,uuuu,vvvv,xxxx,yyyy,aaaaa,kkkkk,llllll	N	
RP	Wilkins	375AST	8	H	26-Nov-2013		Y	10	(yyy),ssss,uuuu,vvvv,xxxx,yyyy,aaaaa,kkkkk,llllll	N	
RP	Wilkins	375AST	10	H	26-Nov-2013		Y	10	(yyy),ssss,uuuu,vvvv,xxxx,yyyy,aaaaa,kkkkk,llllll	N	
RP	Wilkins	375ASTMS	2 1/2	H	5-Nov-2014		Y	10	(yyy),ssss,uuuu,vvvv,xxxx,yyyy,aaaaa,kkkkk,llllll	N	
RP	Wilkins	375ASTMS	3	H	5-Nov-2014		Y	10	(yyy),ssss,uuuu,vvvv,xxxx,yyyy,aaaaa,kkkkk,llllll	N	
RP	Wilkins	375ASTMS	4	H	5-Nov-2014		Y	10	(yyy),ssss,uuuu,vvvv,xxxx,yyyy,aaaaa,kkkkk,llllll	N	
RP	Wilkins	375ASTMS	6	H	5-Nov-2014		Y	10	(yyy),ssss,uuuu,vvvv,xxxx,yyyy,aaaaa,kkkkk,llllll	N	
RP	Wilkins	375ASTMS	8	H	5-Nov-2014		Y	10	(yyy),ssss,uuuu,vvvv,xxxx,yyyy,aaaaa,kkkkk,llllll	N	
RP	Wilkins	375ASTMS	10	H	5-Nov-2014		Y	10	(yyy),ssss,uuuu,vvvv,xxxx,yyyy,aaaaa,kkkkk,llllll	N	
RP	Wilkins	375ASTR	2 1/2	H	12-Jun-2015		Y	10	(yyy),ssss,uuuu,vvvv,xxxx,yyyy,aaaaa,kkkkk,llllll	N	
RP	Wilkins	375ASTR	3	H	12-Jun-2015		Y	10	(yyy),ssss,uuuu,vvvv,xxxx,yyyy,aaaaa,kkkkk,llllll	N	
RP	Wilkins	375ASTR	4	H	31-May-2012	31-May-2015	Y	10	(yyy),ssss,uuuu,vvvv,xxxx,yyyy,aaaaa,kkkkk,llllll	N	
RP	Wilkins	375ASTR	6	H	5-Nov-2013		Y	10	(yyy),ssss,uuuu,vvvv,xxxx,yyyy,aaaaa,kkkkk,llllll	N	
RP	Wilkins	375ASTR	8	H	23-Jan-2014		Y	10	(yyy),ssss,uuuu,vvvv,xxxx,yyyy,aaaaa,kkkkk,llllll	N	
RP	Wilkins	375ASTR	10	H	23-Jan-2014		Y	10	(yyy),ssss,uuuu,vvvv,xxxx,yyyy,aaaaa,kkkkk,llllll	N	
RP	Wilkins	375ASTRMS	2 1/2	H	5-Nov-2014		Y	10	(yyy),ssss,uuuu,vvvv,xxxx,yyyy,aaaaa,kkkkk,llllll	N	
RP	Wilkins	375ASTRMS	3	H	5-Nov-2014		Y	10	(yyy),ssss,uuuu,vvvv,xxxx,yyyy,aaaaa,kkkkk,llllll	N	
RP	Wilkins	375ASTRMS	4	H	5-Nov-2014		Y	10	(yyy),ssss,uuuu,vvvv,xxxx,yyyy,aaaaa,kkkkk,llllll	N	
RP	Wilkins	375ASTRMS	6	H	5-Nov-2014		Y	10	(yyy),ssss,uuuu,vvvv,xxxx,yyyy,aaaaa,kkkkk,llllll	N	
RP	Wilkins	375ASTRMS	8	H	5-Nov-2014		Y	10	(yyy),ssss,uuuu,vvvv,xxxx,yyyy,aaaaa,kkkkk,llllll	N	
RP	Wilkins	375ASTRMS	10	H	5-Nov-2014		Y	10	(yyy),ssss,uuuu,vvvv,xxxx,yyyy,aaaaa,kkkkk,llllll	N	
RP	Wilkins	375AXL	2 1/2	H	14-Apr-2010	14-Apr-2013	N	9	dddd	N	
RP	Wilkins	375AXL	2 1/2	H	14-Apr-2010	14-Apr-2013	Y	9	(ppp),qqq,sss,ttt,yyy,zzz	N	
RP	Wilkins	375AXL	3	H	14-Apr-2010	14-Apr-2013	N	9	dddd	N	
RP	Wilkins	375AXL	3	H	14-Apr-2010	14-Apr-2013	Y	9	(ppp),qqq,sss,ttt,yyy,zzz	N	
RP	Wilkins	375AXL	4	H	14-Apr-2010	14-Apr-2013	N	9	dddd,eeee	N	
RP	Wilkins	375AXL	4	H	14-Apr-2010	14-Apr-2013	Y	9	(ppp),qqq,sss,ttt,www,yyy,zzz,ssss,uuuu,vvvv,xxxx,yyyy,aaaaa	N	
RP	Wilkins	375AXL	6	H	14-Apr-2010	14-Apr-2013	N	9	dddd,eeee	N	
RP	Wilkins	375AXL	6	H	14-Apr-2010	14-Apr-2013	Y	9	(ppp),qqq,sss,ttt,www,yyy,zzz,ssss,uuuu,vvvv,xxxx,yyyy,aaaaa	N	
RP	Wilkins	375AXL	8	H	18-Feb-2010	18-Feb-2016	N	9	zzz,dddd,eeee	N	
RP	Wilkins	375AXL	8	H	18-Feb-2010	18-Feb-2016	Y	9	(ppp),qqq,sss,ttt,www,yyy,ssss,uuuu,vvvv,xxxx,yyyy,aaaaa	N	
RP	Wilkins	375AXL	10	H	18-Feb-2010	18-Feb-2016	N	9	zzz,dddd,eeee	N	
RP	Wilkins	375AXL	10	H	18-Feb-2010	18-Feb-2016	Y	9	(ppp),qqq,sss,ttt,www,yyy,ssss,uuuu,vvvv,xxxx,yyyy,aaaaa	N	
RP	Wilkins	375B	1/2	H	8-Nov-2012	8-Nov-2015	N	9	(int)	N	
RP	Wilkins	375B	3/4	H	8-Nov-2012	8-Nov-2015	N	9	(int)	N	
RP	Wilkins	375B	1	H	8-Nov-2012	8-Nov-2015	N	9	(int)	N	
RP	Wilkins	375B	1 1/4	H	8-Nov-2012	8-Nov-2015	N	9	(int)	N	
RP	Wilkins	375B	1 1/2	H	8-Nov-2012	8-Nov-2015	N	9	(int)	N	
RP	Wilkins	375B	2	H	8-Nov-2012	8-Nov-2015	N	9	(int)	N	
RP	Wilkins	375MS	2 1/2	H	9-Sep-2010	9-Sep-2013	Y	9	(gg),hh,ppp,qqq,ssss,tttt,vvvv,wwww,yyyy,zzzz,kkkkk	N	
RP	Wilkins	375MS	2 1/2	H	3-Jul-2003	3-Jul-2015	N	9	(gg),ee,ff,hh,ll,mm,tt,uu,yy,zz,ppp,qqq,zzz,dddd,ssss,tttt,vvvv,wwww,yyyy,zzzz,kkkkk	N	
RP	Wilkins	375MS	3	H	9-Sep-2010	9-Sep-2013	Y	9	(gg),hh,ppp,qqq,ssss,tttt,vvvv,wwww,yyyy,zzzz,kkkkk	N	
RP	Wilkins	375MS	3	H	3-Jul-2003	3-Jul-2015	N	9	(gg),ee,ff,hh,ll,mm,tt,uu,yy,zz,ppp,qqq,zzz,dddd,ssss,tttt,vvvv,wwww,yyyy,zzzz,kkkkk	N	
RP	Wilkins	375MS	4	H	9-Sep-2010	9-Sep-2013	Y	9	(gg),hh,ppp,qqq,vvv,www,,ssss,tttt,vvvv,wwww,yyyy,zzzz,kkkkk	N	
RP	Wilkins	375MS	4	H	3-Jul-2003	3-Jul-2015	N	9	(gg),ee,ff,hh,ll,mm,tt,uu,yy,zz,ppp,qqq,vvv,www,zzz,dddd,eeee,ssss,tttt,vvvv,wwww,yyyy,zzzz,kkkkk	N	
RP	Wilkins	375MS	6	H	9-Sep-2010	9-Sep-2013	Y	9	(gg),hh,ppp,qqq,vvv,www,zzz,ssss,tttt,vvvv,wwww,yyyy,zzzz,kkkkk	N	
RP	Wilkins	375MS	6	H	3-Jul-2003	3-Jul-2015	N	9	(gg),ee,ff,hh,ll,mm,tt,uu,yy,zz,ppp,qqq,vvv,www,zzz,dddd,eeee,ssss,tttt,vvvv,wwww,yyyy,zzzz,kkkkk	N	
RP	Wilkins	375MS	8	H	9-Sep-2010	9-Sep-2013	Y	9	(gg),hh,ppp,qqq,vvv,www,ssss,tttt,vvvv,wwww,yyyy,zzzz,kkkkk	N	
RP	Wilkins	375MS	8	H	3-Jul-2003	3-Jul-2015	N	9	(gg),ee,ff,hh,ll,mm,tt,uu,yy,zz,ppp,qqq,vvv,www,zzz,dddd,eeee,ssss,tttt,vvvv,wwww,yyyy,zzzz,kkkkk	N	
RP	Wilkins	375MS	10	H	9-Sep-2010	9-Sep-2013	Y	9	(gg),hh,ppp,qqq,vvv,www,ssss,tttt,vvvv,wwww,yyyy,zzzz,kkkkk	N	
RP	Wilkins	375MS	10	H	29-Mar-2005	29-Mar-2014	N	9	(gg),ee,ff,hh,ll,mm,tt,uu,yy,zz,ppp,qqq,vvv,www,zzz,dddd,eeee,ssss,tttt,vvvv,wwww,yyyy,zzzz,kkkkk	N	
RP	Wilkins	375ST	1/2	H	22-Feb-2011	22-Feb-2014	Y	9	(int)	N	
RP	Wilkins	375ST	3/4	H	22-Feb-2011	22-Feb-2014	Y	9	(int)	N	
RP	Wilkins	375ST	1	H	31-Oct-2011	31-Oct-2014	Y	9	int	N	
RP	Wilkins	375XL	1/2	H	7-Apr-2009	7-Apr-2015	Y	9	(int)	N	
RP	Wilkins	375XL	3/4	H	9-Mar-2007	9-Mar-2016	Y	9	(int)	N	

Type	Manufacturer	Model	Size	Orientation(s)	Approved	Renewed	≤0.25% Pb	Manual	Shutoffs	Spare Parts	Bypass
RP	Wilkins	375XL	1	H	9-Mar-2007	9-Mar-2016	Y	9	(int)	N	
RP	Wilkins	375XL	1 1/4	H	20-Apr-2010	20-Apr-2013	Y	9	(int)	N	
RP	Wilkins	375XL	1 1/2	H	20-Apr-2010	20-Apr-2013	Y	9	(int)	N	
RP	Wilkins	375XL	2	H	20-Apr-2010	20-Apr-2013	Y	9	(int)	N	
RP	Wilkins	375XL	2 1/2	H	14-Apr-2010	14-Apr-2013	N	9	ee,ff,ll,mm,tt,uu,yy,zz,zzz,dddd	N	
RP	Wilkins	375XL	2 1/2	H	14-Apr-2010	14-Apr-2013	Y	9	(gg),hh,ppp,qqq,ssss,tttt,vvvv,wwww,yyyy,zzzz	N	
RP	Wilkins	375XL	3	H	14-Apr-2010	14-Apr-2013	N	9	ee,ff,ll,mm,tt,uu,yy,zz,zzz,dddd	N	
RP	Wilkins	375XL	3	H	14-Apr-2010	14-Apr-2013	Y	9	(gg),hh,ppp,qqq,ssss,tttt,vvvv,wwww,yyyy,zzzz	N	
RP	Wilkins	375XL	4	H	14-Apr-2010	14-Apr-2013	N	9	ee,ff,ll,mm,tt,uu,yy,zz,zzz,dddd,eeee	N	
RP	Wilkins	375XL	4	H	14-Apr-2010	14-Apr-2013	Y	9	(gg),hh,ppp,qqq,vvv,www,ssss,tttt,vvvv,wwww,yyyy,zzzz	N	
RP	Wilkins	375XL	6	H	14-Apr-2010	14-Apr-2013	N	9	ee,ff,ll,mm,tt,uu,yy,zz,zzz,dddd,eeee	N	
RP	Wilkins	375XL	6	H	14-Apr-2010	14-Apr-2013	Y	9	(gg),hh,ppp,qqq,vvv,www,ssss,tttt,vvvv,wwww,yyyy,zzzz	N	
RP	Wilkins	375XL	8	H	18-Feb-2010	18-Feb-2016	N	9	ee,ff,ll,mm,tt,uu,yy,zz,zzz,dddd,eeee	N	
RP	Wilkins	375XL	8	H	18-Feb-2010	18-Feb-2016	Y	9	gg,hh,ppp,qqq,vvv,www,ssss,tttt,vvvv,wwww,yyyy,zzzz	N	
RP	Wilkins	375XL	10	H	18-Feb-2010	18-Feb-2016	N	9	ee,ff,ll,mm,tt,uu,yy,zz,zzz,dddd,eeee	N	
RP	Wilkins	375XL	10	H	18-Feb-2010	18-Feb-2016	Y	9	gg,hh,ppp,qqq,vvv,www,ssss,tttt,vvvv,wwww,yyyy,zzzz	N	
RP	Wilkins	375XLB	1/2	H	8-Nov-2012	8-Nov-2015	Y	9	(int)	N	
RP	Wilkins	375XLB	3/4	H	8-Nov-2012	8-Nov-2015	Y	9	(int)	N	
RP	Wilkins	375XLB	1	H	8-Nov-2012	8-Nov-2015	Y	9	(int)	N	
RP	Wilkins	375XLB	1 1/4	H	8-Nov-2012	8-Nov-2015	Y	9	(int)	N	
RP	Wilkins	375XLB	1 1/2	H	8-Nov-2012	8-Nov-2015	Y	9	(int)	N	
RP	Wilkins	375XLB	2	H	8-Nov-2012	8-Nov-2015	Y	9	(int)	N	
RP	Wilkins	375XLMS	2 1/2	H	14-Apr-2010	14-Apr-2013	N	9	ee,ff,ll,mm,tt,uu,yy,zz,zzz,dddd	N	
RP	Wilkins	375XLMS	2 1/2	H	14-Apr-2010	14-Apr-2013	Y	9	(gg),hh,ppp,qqq,ssss,tttt,vvvv,wwww,yyyy,zzzz	N	
RP	Wilkins	375XLMS	3	H	14-Apr-2010	14-Apr-2013	N	9	ee,ff,ll,mm,tt,uu,yy,zz,zzz,dddd	N	
RP	Wilkins	375XLMS	3	H	14-Apr-2010	14-Apr-2013	Y	9	(gg),hh,ppp,qqq,ssss,tttt,vvvv,wwww,yyyy,zzzz	N	
RP	Wilkins	375XLMS	4	H	14-Apr-2010	14-Apr-2013	N	9	ee,ff,ll,mm,tt,uu,yy,zzzzz,dddd,eeee	N	
RP	Wilkins	375XLMS	4	H	14-Apr-2010	14-Apr-2013	Y	9	(gg),hh,ppp,qqq,vvv,www,,ssss,tttt,vvvv,wwww,yyyy,zzzz	N	
RP	Wilkins	375XLMS	6	H	14-Apr-2010	14-Apr-2013	N	9	ee,ff,ll,mm,tt,uu,yy,zz,dddd,eeee	N	
RP	Wilkins	375XLMS	6	H	14-Apr-2010	14-Apr-2013	Y	9	(gg),hh,ppp,qqq,vvv,www,zzz,ssss,tttt,vvvv,wwww,yyyy,zzzz	N	
RP	Wilkins	375XLMS	8	H	18-Feb-2010	18-Feb-2016	N	9	ee,ff,ll,mm,tt,uu,yy,zz,zzz,dddd,eeee	N	
RP	Wilkins	375XLMS	8	H	18-Feb-2010	18-Feb-2016	Y	9	gg,hh,ppp,qqq,vvv,www,ssss,tttt,vvvv,wwww,yyyy,zzzz	N	
RP	Wilkins	375XLMS	10	H	18-Feb-2010	18-Feb-2016	N	9	ee,ff,ll,mm,tt,uu,yy,zz,zzz,dddd,eeee	N	
RP	Wilkins	375XLMS	10	H	18-Feb-2010	18-Feb-2016	Y	9	gg,hh,ppp,qqq,vvv,www,ssss,tttt,vvvv,wwww,yyyy,zzzz	N	
RP	Wilkins	475MS	2 1/2	VUVD	9-Sep-2010	9-Sep-2013	Y	9	(gg),hh,ppp,qqq,ssss,uuuu,vvvv,xxxx,yyyy,aaaaa,kkkkk	N	
RP	Wilkins	475MS	2 1/2	VUVD	3-Jul-2003	3-Jul-2015	N	9	(gg),ee,ff,hh,ll,mm,tt,uu,yy,zz,ppp,qqq,zzz,dddd,ssss,uuuu,vvvv,xxxx,yyyy,aaaaa,kkkkk	N	
RP	Wilkins	475MS	3	VUVD	9-Sep-2010	9-Sep-2013	Y	9	(gg),hh,ppp,qqq,ssss,uuuu,vvvv,xxxx,yyyy,aaaaa,kkkkk,llllll	N	
RP	Wilkins	475MS	3	VUVD	3-Jul-2003	3-Jul-2015	N	9	(gg),ee,ff,hh,ll,mm,tt,uu,yy,zz,ppp,qqq,zzz,dddd,ssss,uuuu,vvvv,xxxx,yyyy,aaaaa,kkkkk,llllll	N	
RP	Wilkins	475MS	4	VUVD	9-Sep-2010	9-Sep-2013	Y	9	(ppp),qqq,sss,ttt,www,yyy,ssss,uuuu,vvvv,xxxx,yyyy,aaaaa,kkkkk,llllll	N	
RP	Wilkins	475MS	4	VUVD	3-Jul-2003	3-Jul-2015	N	9	(ppp),qqq,sss,ttt,www,yyy,zzz,dddd,eeee,ssss,uuuu,vvvv,xxxx,yyyy,aaaaa,kkkkk,llllll	N	
RP	Wilkins	475MS	6	VUVD	9-Sep-2010	9-Sep-2013	Y	9	(ppp),qqq,sss,ttt,www,yyy,ssss,uuuu,vvvv,xxxx,yyyy,aaaaa,kkkkk,llllll	N	
RP	Wilkins	475MS	6	VUVD	3-Jul-2003	3-Jul-2015	N	9	(ppp),qqq,sss,ttt,www,yyy,zzz,dddd,eeee,ssss,uuuu,vvvv,xxxx,yyyy,aaaaa,kkkkk,llllll	N	
RP	Wilkins	475MS	8	VUVD	9-Sep-2010	9-Sep-2013	Y	9	(ppp),qqq,sss,ttt,www,yyy,ssss,uuuu,vvvv,xxxx,yyyy,aaaaa,kkkkk,llllll	N	
RP	Wilkins	475MS	8	VUVD	3-Jul-2003	3-Jul-2015	N	9	(ppp),qqq,sss,ttt,www,yyy,zzz,dddd,eeee,ssss,uuuu,vvvv,xxxx,yyyy,aaaaa,kkkkk,llllll	N	
RP	Wilkins	475MS	10	H	9-Sep-2010	9-Sep-2013	Y	9	(ppp),qqq,sss,ttt,www,ssss,uuuu,vvvv,xxxx,yyyy,aaaaa,kkkkk,llllll	N	
RP	Wilkins	475MS	10	H	29-Mar-2005	29-Mar-2014	N	9	(ppp),qqq,sss,ttt,www,zzz,dddd,eeee,ssss,uuuu,vvvv,xxxx,yyyy,aaaaa,kkkkk,llllll	N	
RP	Wilkins	475V	2 1/2	VUVU	9-Sep-2010	9-Sep-2013	Y	9	(gg),hh,ppp,qqq,ssss,uuuu,vvvv,xxxx,yyyy,aaaaa,kkkkk	N	
RP	Wilkins	475V	2 1/2	VUVU	24-Jan-2002	24-Jan-2014	N	9	(gg),ee,ff,hh,ll,mm,tt,uu,yy,zz,ppp,qqq,zzz,dddd,ssss,uuuu,vvvv,xxxx,yyyy,aaaaa,kkkkk	N	
RP	Wilkins	475V	3	VUVU	9-Sep-2010	9-Sep-2013	Y	9	(gg),hh,ppp,qqq,ssss,uuuu,vvvv,xxxx,yyyy,aaaaa,kkkkk,llllll	N	
RP	Wilkins	475V	3	VUVU	24-Jan-2002	24-Jan-2014	N	9	(gg),ee,ff,hh,ll,mm,tt,uu,yy,zz,ppp,qqq,zzz,dddd,ssss,uuuu,vvvv,xxxx,yyyy,aaaaa,kkkkk,llllll	N	
RP	Wilkins	475V	4	VUVU	9-Sep-2010	9-Sep-2013	Y	9	(ppp),qqq,sss,ttt,www,yyy,ssss,uuuu,vvvv,xxxx,yyyy,aaaaa,kkkkk,llllll	N	
RP	Wilkins	475V	4	VUVU	9-Sep-2000	9-Sep-2015	N	9	(ppp),qqq,sss,ttt,www,yyy,zzz,dddd,eeee,ssss,uuuu,vvvv,xxxx,yyyy,aaaaa,kkkkk,llllll	N	
RP	Wilkins	475V	6	VUVU	31-May-2001	31-May-2013	N	9	(ppp),qqq,sss,ttt,www,yyy,zzz,dddd,eeee,ssss,uuuu,vvvv,xxxx,yyyy,aaaaa,kkkkk,llllll	N	
RP	Wilkins	475V	6	VUVU	9-Sep-2010	9-Sep-2013	Y	9	(ppp),qqq,sss,ttt,www,yyy,ssss,uuuu,vvvv,xxxx,yyyy,aaaaa,kkkkk,llllll	N	
RP	Wilkins	475V	8	VUVU	8-Jun-2004	8-Jun-2013	N	9	(ppp),qqq,sss,ttt,www,yyy,zzz,dddd,eeee,ssss,uuuu,vvvv,xxxx,yyyy,aaaaa,kkkkk,llllll	N	
RP	Wilkins	475V	8	VUVU	9-Sep-2010	9-Sep-2013	Y	9	(ppp),qqq,sss,ttt,www,yyy,ssss,uuuu,vvvv,xxxx,yyyy,aaaaa,kkkkk,llllll	N	
RP	Wilkins	475V	10	VUVU	9-Sep-2010	9-Sep-2013	Y	9	(ppp),qqq,sss,ttt,www,ssss,uuuu,vvvv,xxxx,yyyy,aaaaa,kkkkk,llllll	N	
RP	Wilkins	475V	10	VUVU	22-Nov-2004	22-Nov-2013	N	9	(ppp),qqq,sss,ttt,www,zzz,dddd,eeee,ssss,uuuu,vvvv,xxxx,yyyy,aaaaa,kkkkk,llllll	N	
RP	Wilkins	475VMS	2 1/2	VUVU	9-Sep-2010	9-Sep-2013	Y	9	(gg),hh,ppp,qqq,ssss,uuuu,vvvv,xxxx,yyyy,aaaaa,kkkkk	N	
RP	Wilkins	475VMS	2 1/2	VUVU	3-Jul-2003	3-Jul-2015	N	9	(gg),ee,ff,hh,ll,mm,tt,uu,yy,zz,ppp,qqq,zzz,dddd,ssss,uuuu,vvvv,xxxx,yyyy,aaaaa,kkkkk	N	
RP	Wilkins	475VMS	3	VUVU	9-Sep-2010	9-Sep-2013	Y	9	(gg),hh,ppp,qqq,ssss,uuuu,vvvv,xxxx,yyyy,aaaaa,kkkkk,llllll	N	
RP	Wilkins	475VMS	3	VUVU	3-Jul-2003	3-Jul-2015	N	9	(gg),ee,ff,hh,ll,mm,tt,uu,yy,zz,ppp,qqq,zzz,dddd,ssss,uuuu,vvvv,xxxx,yyyy,aaaaa,kkkkk,llllll	N	
RP	Wilkins	475VMS	4	VUVU	9-Sep-2010	9-Sep-2013	Y	9	(ppp),qqq,sss,ttt,www,yyy,ssss,uuuu,vvvv,xxxx,yyyy,aaaaa,kkkkk,llllll	N	
RP	Wilkins	475VMS	4	VUVU	3-Jul-2003	3-Jul-2015	N	9	(ppp),qqq,sss,ttt,www,yyy,zzz,dddd,eeee,ssss,uuuu,vvvv,xxxx,yyyy,aaaaa,kkkkk,llllll	N	
RP	Wilkins	475VMS	6	VUVU	9-Sep-2010	9-Sep-2013	Y	9	(ppp),qqq,sss,ttt,www,yyy,ssss,uuuu,vvvv,xxxx,yyyy,aaaaa,kkkkk,llllll	N	
RP	Wilkins	475VMS	6	VUVU	3-Jul-2003	3-Jul-2015	N	9	(ppp),qqq,sss,ttt,www,yyy,zzz,dddd,eeee,ssss,uuuu,vvvv,xxxx,yyyy,aaaaa,kkkkk,llllll	N	
RP	Wilkins	475VMS	8	VUVU	9-Sep-2010	9-Sep-2013	Y	9	(ppp),qqq,sss,ttt,www,yyy,ssss,uuuu,vvvv,xxxx,yyyy,aaaaa,kkkkk,llllll	N	
RP	Wilkins	475VMS	8	VUVU	3-Jul-2003	3-Jul-2015	N	9	(ppp),qqq,sss,ttt,www,yyy,zzz,dddd,eeee,ssss,uuuu,vvvv,xxxx,yyyy,aaaaa,kkkkk,llllll	N	
RP	Wilkins	475VMS	10	H	9-Sep-2010	9-Sep-2013	Y	9	(ppp),qqq,sss,ttt,www,ssss,uuuu,vvvv,xxxx,yyyy,aaaaa,kkkkk,llllll	N	
RP	Wilkins	475VMS	10	H	29-Mar-2005	29-Mar-2014	N	9	(ppp),qqq,sss,ttt,www,zzz,dddd,eeee,ssss,uuuu,vvvv,xxxx,yyyy,aaaaa,kkkkk,llllll	N	
RP	Wilkins	475XL	2 1/2	VUVD	14-Apr-2010	14-Apr-2013	N	9	ee,ff,ll,mm,tt,uu,yy,zz,zzz,dddd	N	
RP	Wilkins	475XL	2 1/2	VUVD	14-Apr-2010	14-Apr-2013	Y	9	(gg),hh,ppp,qqq,ssss,uuuu,vvvv,xxxx,yyyy,aaaaa	N	
RP	Wilkins	475XL	3	VUVD	14-Apr-2010	14-Apr-2013	N	9	ee,ff,ll,mm,tt,uu,yy,zz,zzz,dddd	N	
RP	Wilkins	475XL	3	VUVD	14-Apr-2010	14-Apr-2013	Y	9	(gg),hh,ppp,qqq,ssss,uuuu,vvvv,xxxx,yyyy,aaaaa	N	
RP	Wilkins	475XL	4	VUVD	14-Apr-2010	14-Apr-2013	N	9	zzz,dddd,eeee	N	
RP	Wilkins	475XL	4	VUVD	14-Apr-2010	14-Apr-2013	Y	9	(ppp),qqq,sss,ttt,www,yyy,ssss,uuuu,vvvv,xxxx,yyyy,aaaaa	N	
RP	Wilkins	475XL	6	VUVD	14-Apr-2010	14-Apr-2013	N	9	zzz,dddd,eeee	N	
RP	Wilkins	475XL	6	VUVD	14-Apr-2010	14-Apr-2013	Y	9	(ppp),qqq,sss,ttt,www,yyy,ssss,uuuu,vvvv,xxxx,yyyy,aaaaa	N	
RP	Wilkins	475XL	8	VUVD	18-Feb-2010	18-Feb-2016	N	9	zzz,dddd,eeee	N	
RP	Wilkins	475XL	8	VUVD	18-Feb-2010	18-Feb-2016	Y	9	ppp,qqq,sss,ttt,www,yyy,ssss,uuuu,vvvv,xxxx,yyyy,aaaaa	N	
RP	Wilkins	475XL	10	VUVD	18-Feb-2010	18-Feb-2016	N	9	zzz,dddd,eeee	N	
RP	Wilkins	475XL	10	VUVD	18-Feb-2010	18-Feb-2016	Y	9	ppp,qqq,sss,ttt,www,ssss,uuuu,vvvv,xxxx,yyyy,aaaaa	N	
RP	Wilkins	475XLMS	2 1/2	VUVD	14-Apr-2010	14-Apr-2013	N	9	ee,ff,ll,mm,tt,uu,yy,zz,zzz,dddd	N	
RP	Wilkins	475XLMS	2 1/2	VUVD	14-Apr-2010	14-Apr-2013	Y	9	(gg),hh,ppp,qqq,ssss,uuuu,vvvv,xxxx,yyyy,aaaaa	N	
RP	Wilkins	475XLMS	3	VUVD	14-Apr-2010	14-Apr-2013	N	9	ee,ff,ll,mm,tt,uu,yy,zz,zzz,dddd	N	
RP	Wilkins	475XLMS	3	VUVD	14-Apr-2010	14-Apr-2013	Y	9	(gg),hh,ppp,qqq,ssss,uuuu,vvvv,xxxx,yyyy,aaaaa	N	
RP	Wilkins	475XLMS	4	VUVD	14-Apr-2010	14-Apr-2013	N	9	zzz,dddd,eeee	N	
RP	Wilkins	475XLMS	4	VUVD	14-Apr-2010	14-Apr-2013	Y	9	(ppp),qqq,sss,ttt,www,yyy,ssss,uuuu,vvvv,xxxx,yyyy,aaaaa	N	
RP	Wilkins	475XLMS	6	VUVD	14-Apr-2010	14-Apr-2013	N	9	(gg),hh,ppp,qqq,ssss,uuuu,vvvv,xxxx,yyyy,aaaaa	N	
RP	Wilkins	475XLMS	6	VUVD	14-Apr-2010	14-Apr-2013	Y	9	(ppp),qqq,sss,ttt,www,yyy,ssss,uuuu,vvvv,xxxx,yyyy,aaaaa	N	
RP	Wilkins	475XLMS	8	VUVD	18-Feb-2010	18-Feb-2016	N	9	zzz,dddd,eeee	N	
RP	Wilkins	475XLMS	8	VUVD	18-Feb-2010	18-Feb-2016	Y	9	ppp,qqq,sss,ttt,www,yyy,ssss,uuuu,vvvv,xxxx,yyyy,aaaaa	N	
RP	Wilkins	475XLMS	10	H	18-Feb-2010	18-Feb-2016	N	9	zzz,dddd,eeee	N	
RP	Wilkins	475XLMS	10	H	18-Feb-2010	18-Feb-2016	Y	9	ppp,qqq,sss,ttt,www,ssss,uuuu,vvvv,xxxx,yyyy,aaaaa	N	
RP	Wilkins	475XLV	2 1/2	VUVU	14-Apr-2010	14-Apr-2013	N	9	ee,ff,ll,mm,tt,uu,yy,zz,zzz,dddd	N	
RP	Wilkins	475XLV	2 1/2	VUVU	14-Apr-2010	14-Apr-2013	Y	9	(gg),hh,ppp,qqq,ssss,uuuu,vvvv,xxxx,yyyy,aaaaa	N	
RP	Wilkins	475XLV	3	VUVU	14-Apr-2010	14-Apr-2013	N	9	ee,ff,ll,mm,tt,uu,yy,zz,zzz,dddd	N	
RP	Wilkins	475XLV	3	VUVU	14-Apr-2010	14-Apr-2013	Y	9	(gg),hh,ppp,qqq,ssss,uuuu,vvvv,xxxx,yyyy,aaaaa	N	
RP	Wilkins	475XLV	4	VUVU	14-Apr-2010	14-Apr-2013	N	9	zzz,dddd,eeee	N	
RP	Wilkins	475XLV	4	VUVU	14-Apr-2010	14-Apr-2013	Y	9	(ppp),qqq,sss,ttt,www,yyy,ssss,uuuu,vvvv,xxxx,yyyy,aaaaa	N	
RP	Wilkins	475XLV	6	VUVU	14-Apr-2010	14-Apr-2013	N	9	zzz,dddd,eeee	N	
RP	Wilkins	475XLV	6	VUVU	14-Apr-2010	14-Apr-2013	Y	9	(ppp),qqq,sss,ttt,www,yyy,ssss,uuuu,vvvv,xxxx,yyyy,aaaaa	N	
RP	Wilkins	475XLV	8	VUVU	18-Feb-2010	18-Feb-2016	N	9	zzz,dddd,eeee	N	
RP	Wilkins	475XLV	8	VUVU	18-Feb-2010	18-Feb-2016	Y	9	ppp,qqq,sss,ttt,www,yyy,ssss,uuuu,vvvv,xxxx,yyyy,aaaaa	N	
RP	Wilkins	475XLV	10	VUVU	18-Feb-2010	18-Feb-2016	N	9	zzz,dddd,eeee	N	
RP	Wilkins	475XLV	10	VUVU	18-Feb-2010	18-Feb-2016	Y	9	ppp,qqq,sss,ttt,www,ssss,uuuu,vvvv,xxxx,yyyy,aaaaa	N	
RP	Wilkins	475XLVMS	2 1/2	VUVU	14-Apr-2010	14-Apr-2013	N	9	ee,ff,ll,mm,tt,uu,yy,zz,zzz,dddd	N	
RP	Wilkins	475XLVMS	2 1/2	VUVU	14-Apr-2010	14-Apr-2013	Y	9	(gg),hh,ppp,qqq,ssss,uuuu,vvvv,xxxx,yyyy,aaaaa	N	
RP	Wilkins	475XLVMS	3	VUVU	14-Apr-2010	14-Apr-2013	N	9	ee,ff,ll,mm,tt,uu,yy,zz,zzz,dddd	N	
RP	Wilkins	475XLVMS	3	VUVU	14-Apr-2010	14-Apr-2013	Y	9	(gg),hh,ppp,qqq,ssss,uuuu,vvvv,xxxx,yyyy,aaaaa	N	
RP	Wilkins	475XLVMS	4	VUVU	14-Apr-2010	14-Apr-2013	N	9	zzz,dddd,eeee	N	
RP	Wilkins	475XLVMS	4	VUVU	14-Apr-2010	14-Apr-2013	Y	9	(ppp),qqq,sss,ttt,www,yyy,ssss,uuuu,vvvv,xxxx,yyyy,aaaaa	N	
RP	Wilkins	475XLVMS	6	VUVU	14-Apr-2010	14-Apr-2013	N	9	zzz,dddd,eeee	N	
RP	Wilkins	475XLVMS	6	VUVU	14-Apr-2010	14-Apr-2013	Y	9	(ppp),qqq,sss,ttt,www,yyy,ssss,uuuu,vvvv,xxxx,yyyy,aaaaa	N	
RP	Wilkins	475XLVMS	8	VUVU	18-Feb-2010	18-Feb-2016	N	9	zzz,dddd,eeee	N	
RP	Wilkins	475XLVMS	8	VUVU	18-Feb-2010	18-Feb-2016	Y	9	ppp,qqq,sss,ttt,www,yyy,ssss,uuuu,vvvv,xxxx,yyyy,aaaaa	N	
RP	Wilkins	475XLVMS	10	H	18-Feb-2010	18-Feb-2016	N	9	zzz,dddd,eeee	N	
RP	Wilkins	475XLVMS	10	H	18-Feb-2010	18-Feb-2016	Y	9	ppp,qqq,sss,ttt,www,ssss,uuuu,vvvv,xxxx,yyyy,aaaaa	N	
RP	Wilkins	575	3/4	H	28-Apr-1976	28-Apr-2015	N	5		Y	
RP	Wilkins	575	1	H	28-Apr-1976	28-Apr-2015	N	5		Y	
RP	Wilkins	575	2 1/2	H	25-Sep-1986	25-Sep-2013	N	7	gg,ee,tt,yy	Y	
RP	Wilkins	575	3	H	20-Aug-1979	20-Aug-2015	N	5	gg,ee,tt,yy	Y	
RP	Wilkins	575	4	H	8-Jun-1980	8-Jun-2013	N	5	gg,ee,tt,yy	Y	
RP	Wilkins	575	6	H	6-Jul-1981	6-Jul-2014	N	6	gg,ee,tt,yy	Y	
RP	Wilkins	575 (MOD-III)	1 1/4	H	11-Oct-1976	11-Oct-2015	N	5	ii	Y	

Type	Manufacturer	Model	Size	Orientation(s)	Approved	Renewed	≤0.25% Pb	Manual	Shutoffs	Spare Parts	Bypass
RP	Wilkins	575 (MOD-III)	1 1/2	H	11-Oct-1976	11-Oct-2015	N	5	ii	Y	
RP	Wilkins	575 (MOD-III)	2	H	11-Oct-1976	11-Oct-2015	N	5	ii	Y	
RP	Wilkins	575A	3/4	H	17-Apr-1987	17-Apr-2014	N	7	ii	Y	
RP	Wilkins	575A	1	H	17-Apr-1987	17-Apr-2014	N	7	ii	Y	
RP	Wilkins	575M10	10	H	1-Jun-1983	1-Jun-2013	N	6	gg,ee,tt,yy	Y	
RP	Wilkins	575M8	8	H	11-Apr-1983	11-Apr-2016	N	6	gg,ee,tt,yy	Y	
RP	Wilkins	975	3/4	H	18-Jul-1991	18-Jul-2015	N	8	ii	Y	
RP	Wilkins	975	1	H	18-Jul-1991	18-Jul-2015	N	8	ii	Y	
RP	Wilkins	975	1 1/4	H	18-Jul-1991	18-Jul-2015	N	8	ii	Y	
RP	Wilkins	975	1 1/2	H	18-Jul-1991	18-Jul-2015	N	8	ii	Y	
RP	Wilkins	975	2	H	18-Jul-1991	18-Jul-2015	N	8	ii	Y	
RP	Wilkins	975	2 1/2	H	26-Nov-1991	26-Nov-2015	N	8	gg,ee,ff,hh,tt,uu,yy,zz,ssss,tttt,vvvv,wwww,yyyy,zzzz	Y	
RP	Wilkins	975	3	H	8-Nov-1991	8-Nov-2015	N	8	gg,ee,ff,hh,tt,uu,yy,zz,ssss,tttt,vvvv,wwww,yyyy,zzzz	Y	
RP	Wilkins	975	4	H	8-Nov-1991	8-Nov-2015	N	8	gg,ee,ff,hh,tt,uu,yy,zz,ppp,ssss,tttt,vvvv,wwww,yyyy,zzzz	Y	
RP	Wilkins	975	6	H	8-Nov-1991	8-Nov-2015	N	8	gg,ee,ff,hh,tt,uu,yy,zz,ppp,ssss,tttt,vvvv,wwww,yyyy,zzzz	Y	
RP	Wilkins	975A	3/4	H	18-Jul-1991	18-Jul-2015	N	8	ii	Y	
RP	Wilkins	975A	1	H	18-Jul-1991	18-Jul-2015	N	8	ii	Y	
RP	Wilkins	975A	1 1/4	H	18-Jul-1991	18-Jul-2015	N	8	ii	Y	
RP	Wilkins	975A	1 1/2	H	18-Jul-1991	18-Jul-2015	N	8	ii	Y	
RP	Wilkins	975A	2	H	18-Jul-1991	18-Jul-2015	N	8	ii	Y	
RP	Wilkins	975BMS	2 1/2	H	17-Jun-1997	17-Jun-2015	N	8	(gg),ee,ff,hh,tt,uu,yy,zz,ssss,tttt,vvvv,wwww,yyyy,zzzz	N	
RP	Wilkins	975BMS	3	H	17-Jun-1997	17-Jun-2015	N	8	(gg),ee,ff,hh,tt,uu,yy,zz,ssss,tttt,vvvv,wwww,yyyy,zzzz	N	
RP	Wilkins	975BMS	4	H	17-Jun-1997	17-Jun-2015	N	8	gg,ee,ff,hh,tt,uu,yy,zz,ssss,tttt,vvvv,wwww,yyyy,zzzz	Y	
RP	Wilkins	975BMS	6	H	17-Jun-1997	17-Jun-2015	N	8	gg,ee,ff,hh,tt,uu,yy,zz,ssss,tttt,vvvv,wwww,yyyy,zzzz	Y	
RP	Wilkins	975BMS	8	H	17-Jun-1997	17-Jun-2015	N	8	(gg),ee,ff,hh,tt,uu,yy,zz,ppp,ssss,tttt,vvvv,wwww,yyyy,zzzz	N	
RP	Wilkins	975BMS	10	H	17-Jun-1997	17-Jun-2015	N	8	(gg),ee,ff,hh,tt,uu,yy,zz,ppp,ssss,tttt,vvvv,wwww,yyyy,zzzz	N	
RP	Wilkins	975MS	2 1/2	H	5-May-1995	5-May-2013	N	8	(gg),ee,ff,hh,tt,uu,yy,zz,ssss,tttt,vvvv,wwww,yyyy,zzzz	N	
RP	Wilkins	975MS	3	H	5-May-1995	5-May-2013	N	8	(gg),ee,ff,hh,tt,uu,yy,zz,ssss,tttt,vvvv,wwww,yyyy,zzzz	N	
RP	Wilkins	975MS	4	H	5-May-1995	5-May-2013	N	8	gg,ee,ff,hh,tt,uu,yy,zz,ssss,tttt,vvvv,wwww,yyyy,zzzz	Y	
RP	Wilkins	975MS	6	H	5-May-1995	5-May-2013	N	8	gg,ee,ff,hh,tt,uu,yy,zz,ssss,tttt,vvvv,wwww,yyyy,zzzz	Y	
RP	Wilkins	975MS	8	H	5-Dec-1996	5-Dec-2014	N	8	(gg),ee,ff,hh,tt,uu,yy,zz,ppp,ssss,tttt,vvvv,wwww,yyyy,zzzz	N	
RP	Wilkins	975MS	10	H	5-Dec-1996	5-Dec-2014	N	8	(gg),ee,ff,hh,tt,uu,yy,zz,ppp,ssss,tttt,vvvv,wwww,yyyy,zzzz	N	
RP	Wilkins	975XL	1/4	H	12-Jul-1994	12-Jul-2015	N	8	(ii)	N	
RP	Wilkins	975XL	3/8	H	12-Jul-1994	12-Jul-2015	N	8	(ii)	N	
RP	Wilkins	975XL	1/2	H	12-Jul-1994	12-Jul-2015	N	8	(ii)	N	
RP	Wilkins	975XL	3/4	H	2-Nov-1992	2-Nov-2013	N	8	(ii),ooo	N	
RP	Wilkins	975XL	1	H	2-Nov-1992	2-Nov-2013	N	8	(ii),ooo	N	
RP	Wilkins	975XL	1 1/4	H	2-Nov-1992	2-Nov-2013	N	8	(ii),ooo,ggg	N	
RP	Wilkins	975XL	1 1/2	H	2-Nov-1992	2-Nov-2013	N	8	(ii),ooo	N	
RP	Wilkins	975XL	2	H	2-Nov-1992	2-Nov-2013	N	8	(ii),bbb,ooo,bbbbb,ccccc	N	
RP	Wilkins	975XL2	1/4	H	1-Oct-2009	1-Oct-2015	Y	8	(iiii)	N	
RP	Wilkins	975XL2	3/8	H	1-Oct-2009	1-Oct-2015	Y	8	(iiii)	N	
RP	Wilkins	975XL2	1/2	H	1-Oct-2009	1-Oct-2015	Y	8	(iiii)	N	
RP	Wilkins	975XL2	3/4	H	29-Jul-2009	29-Jul-2015	Y	8	(iiii)	N	
RP	Wilkins	975XL2	1	H	29-Jul-2009	29-Jul-2015	Y	8	(iiii)	N	
RP	Wilkins	975XL2	1 1/4	H	21-Aug-2009	21-Aug-2015	Y	8	(iiii)	N	
RP	Wilkins	975XL2	1 1/2	H	21-Aug-2009	21-Aug-2015	Y	8	(iiii)	N	
RP	Wilkins	975XL2	2	H	21-Aug-2009	21-Aug-2015	Y	8	(iiii)	N	
RP	Wilkins	975XL2BMS	3/4	H	9-Sep-2010	9-Sep-2013	Y	8	(iiii)	N	
RP	Wilkins	975XL2BMS	1	H	9-Sep-2010	9-Sep-2013	Y	8	(iiii)	N	
RP	Wilkins	975XL2BMS	1 1/4	H	9-Sep-2010	9-Sep-2013	Y	8	(iiii)	N	
RP	Wilkins	975XL2BMS	1 1/2	H	9-Sep-2010	9-Sep-2013	Y	8	(iiii)	N	
RP	Wilkins	975XL2BMS	2	H	9-Sep-2010	9-Sep-2013	Y	8	(iiii)	N	
RP	Wilkins	975XL2MS	3/4	H	9-Sep-2010	9-Sep-2013	Y	8	(iiii)	N	
RP	Wilkins	975XL2MS	1	H	9-Sep-2010	9-Sep-2013	Y	8	(iiii)	N	
RP	Wilkins	975XL2MS	1 1/4	H	9-Sep-2010	9-Sep-2013	Y	8	(iiii)	N	
RP	Wilkins	975XL2MS	1 1/2	H	9-Sep-2010	9-Sep-2013	Y	8	(iiii)	N	
RP	Wilkins	975XL2MS	2	H	9-Sep-2010	9-Sep-2013	Y	8	(iiii)	N	
RP	Wilkins	975XL2SE	3/4	VUVD	22-Feb-2011	22-Feb-2014	Y	9	(iiii)	N	
RP	Wilkins	975XL2SE	3/4	VUVU	22-Feb-2011	22-Feb-2014	Y	9	(iiii)	N	
RP	Wilkins	975XL2SE	1	VUVD	22-Feb-2011	22-Feb-2014	Y	9	(iiii)	N	
RP	Wilkins	975XL2SE	1	VUVU	22-Feb-2011	22-Feb-2014	Y	9	(iiii)	N	
RP	Wilkins	975XL2SE	1 1/4	VUVD	22-Feb-2011	22-Feb-2014	Y	9	(iiii)	N	
RP	Wilkins	975XL2SE	1 1/4	VUVU	22-Feb-2011	22-Feb-2014	Y	9	(iiii)	N	
RP	Wilkins	975XL2SE	1 1/2	VUVD	22-Feb-2011	22-Feb-2014	Y	9	(iiii)	N	
RP	Wilkins	975XL2SE	1 1/2	VUVU	22-Feb-2011	22-Feb-2014	Y	9	(iiii)	N	
RP	Wilkins	975XL2SE	2	VUVD	22-Feb-2011	22-Feb-2014	Y	9	(iiii)	N	
RP	Wilkins	975XL2SE	2	VUVU	22-Feb-2011	22-Feb-2014	Y	9	(iiii)	N	
RP	Wilkins	975XL2SEU	3/4	VUVD	29-Mar-2011	29-Mar-2014	Y	9	(mmmmm)	N	
RP	Wilkins	975XL2SEU	3/4	VUVU	29-Mar-2011	29-Mar-2014	Y	9	(mmmmm)	N	
RP	Wilkins	975XL2SEU	1	VUVD	29-Mar-2011	29-Mar-2014	Y	9	(mmmmm)	N	
RP	Wilkins	975XL2SEU	1	VUVU	29-Mar-2011	29-Mar-2014	Y	9	(mmmmm)	N	
RP	Wilkins	975XL2SEU	1 1/4	VUVD	22-Feb-2011	22-Feb-2014	Y	9	(mmmmm)	N	
RP	Wilkins	975XL2SEU	1 1/4	VUVU	22-Feb-2011	22-Feb-2014	Y	9	(mmmmm)	N	
RP	Wilkins	975XL2SEU	1 1/2	VUVD	22-Feb-2011	22-Feb-2014	Y	9	(mmmmm)	N	
RP	Wilkins	975XL2SEU	1 1/2	VUVU	22-Feb-2011	22-Feb-2014	Y	9	(mmmmm)	N	
RP	Wilkins	975XL2SEU	2	VUVD	22-Feb-2011	22-Feb-2014	Y	9	(mmmmm)	N	
RP	Wilkins	975XL2SEU	2	VUVU	22-Feb-2011	22-Feb-2014	Y	9	(mmmmm)	N	
RP	Wilkins	975XL2TCU	1/2	H	9-Sep-2010	9-Sep-2013	Y	8	(iiii)	N	
RP	Wilkins	975XL2TCU	3/4	H	9-Sep-2010	9-Sep-2013	Y	8	(iiii)	N	
RP	Wilkins	975XL2TCU	1	H	9-Sep-2010	9-Sep-2013	Y	8	(iiii)	N	
RP	Wilkins	975XL2TCU	1 1/4	H	9-Sep-2010	9-Sep-2013	Y	8	(iiii)	N	
RP	Wilkins	975XL2TCU	1 1/2	H	9-Sep-2010	9-Sep-2013	Y	8	(iiii)	N	
RP	Wilkins	975XL2TCU	2	H	9-Sep-2010	9-Sep-2013	Y	8	(iiii)	N	
RP	Wilkins	975XL2U	3/4	H	22-Feb-2011	22-Feb-2014	Y	8	(mmmmm)	N	
RP	Wilkins	975XL2U	1	H	22-Feb-2011	22-Feb-2014	Y	8	(mmmmm)	N	
RP	Wilkins	975XL2U	1 1/2	H	22-Feb-2011	22-Feb-2014	Y	8	(mmmmm)	N	
RP	Wilkins	975XL2U	2	H	22-Feb-2011	22-Feb-2014	Y	8	(mmmmm)	N	
RP	Wilkins	975XL2V	3/4	VUVD	22-Feb-2011	22-Feb-2014	Y	9	(iiii)	N	
RP	Wilkins	975XL2V	3/4	VUVU	22-Feb-2011	22-Feb-2014	Y	9	(iiii)	N	
RP	Wilkins	975XL2V	1	VUVD	22-Feb-2011	22-Feb-2014	Y	9	(iiii)	N	
RP	Wilkins	975XL2V	1	VUVU	22-Feb-2011	22-Feb-2014	Y	9	(iiii)	N	
RP	Wilkins	975XLBF	2	H	22-Feb-2011	22-Feb-2014	N	8	(bbbbb)	N	
RP	Wilkins	975XLBFSS	2	H	22-Feb-2011	22-Feb-2014	N	8	(ccccc)	N	
RP	Wilkins	975XLBMS	3/4	H	9-May-1997	9-May-2015	N	8	(ii),ooo	N	
RP	Wilkins	975XLBMS	1	H	9-May-1997	9-May-2015	N	8	(ii),ooo	N	
RP	Wilkins	975XLBMS	1 1/4	H	9-May-1997	9-May-2015	N	8	(ii),ooo	N	
RP	Wilkins	975XLBMS	1 1/2	H	9-May-1997	9-May-2015	N	8	(ii),ooo	N	
RP	Wilkins	975XLBMS	2	H	9-May-1997	9-May-2015	N	8	(ii),ooo	N	
RP	Wilkins	975XLD	3/4	H	8-Oct-2002	8-Oct-2014	N	9	(ii),ooo	N	
RP	Wilkins	975XLD	3/4	H	3-Jul-2013		Y	10	(iiii)	N	
RP	Wilkins	975XLMS	3/4	H	30-Aug-1994	30-Aug-2015	N	8	(ii),ooo	N	
RP	Wilkins	975XLMS	1	H	30-Aug-1994	30-Aug-2015	N	8	(ii),ooo	N	
RP	Wilkins	975XLMS	1 1/4	H	30-Aug-1994	30-Aug-2015	N	8	(ii),ooo	N	
RP	Wilkins	975XLMS	1 1/2	H	30-Aug-1994	30-Aug-2015	N	8	(ii),ooo	N	
RP	Wilkins	975XLMS	2	H	30-Aug-1994	30-Aug-2015	N	8	(ii),ooo	N	
RP	Wilkins	975XLSE	3/4	VUVD	16-Oct-2000	16-Oct-2015	N	9	(ii),ooo	N	
RP	Wilkins	975XLSE	3/4	VUVU	16-Oct-2000	16-Oct-2015	N	9	(ii),ooo	N	
RP	Wilkins	975XLSE	1	VUVD	16-Oct-2000	16-Oct-2015	N	9	(ii),ooo	N	
RP	Wilkins	975XLSE	1	VUVU	16-Oct-2000	16-Oct-2015	N	9	(ii),ooo	N	
RP	Wilkins	975XLSE	1 1/4	VUVD	4-Nov-1999	4-Nov-2014	N	9	(ii),ooo	N	
RP	Wilkins	975XLSE	1 1/4	VUVU	4-Nov-1999	4-Nov-2014	N	9	(ii),ooo	N	
RP	Wilkins	975XLSE	1 1/2	VUVD	4-Nov-1999	4-Nov-2014	N	9	(ii),ooo	N	
RP	Wilkins	975XLSE	1 1/2	VUVU	4-Nov-1999	4-Nov-2014	N	9	(ii),ooo	N	
RP	Wilkins	975XLSE	2	VUVD	4-Nov-1999	4-Nov-2014	N	9	(ii),ooo	N	
RP	Wilkins	975XLSE	2	VUVU	4-Nov-1999	4-Nov-2014	N	9	(ii),ooo	N	
RP	Wilkins	975XLSEU	3/4	VUVD	16-Oct-2000	16-Oct-2015	N	9	(ggg),xxx	N	
RP	Wilkins	975XLSEU	3/4	VUVU	16-Oct-2000	16-Oct-2015	N	9	(ggg),xxx	N	
RP	Wilkins	975XLSEU	1	VUVD	16-Oct-2000	16-Oct-2015	N	9	(ggg),xxx	N	
RP	Wilkins	975XLSEU	1	VUVU	16-Oct-2000	16-Oct-2015	N	9	(ggg),xxx	N	
RP	Wilkins	975XLSEU	1 1/4	VUVD	27-Mar-2000	27-Mar-2015	N	9	(ggg),xxx	N	
RP	Wilkins	975XLSEU	1 1/4	VUVU	27-Mar-2000	27-Mar-2015	N	9	(ggg),xxx	N	
RP	Wilkins	975XLSEU	1 1/2	VUVD	27-Mar-2000	27-Mar-2015	N	9	(ggg),xxx	N	
RP	Wilkins	975XLSEU	1 1/2	VUVU	27-Mar-2000	27-Mar-2015	N	9	(ggg),xxx	N	
RP	Wilkins	975XLSEU	2	VUVD	27-Mar-2000	27-Mar-2015	N	9	(ggg),xxx	N	

Type	Manufacturer	Model	Size	Orientation(s)	Approved	Renewed	≤0.25% Pb	Manual	Shutoffs	Spare Parts	Bypass
RP	Wilkins	975XLSEU	2	VUVU	27-Mar-2000	27-Mar-2015	N	9	(ggg),xxx	N	
RP	Wilkins	975XLST	3/8	H	19-Nov-2002	19-Nov-2014	Y	9	(ggggg)	N	
RP	Wilkins	975XLST	1/2	H	19-Nov-2002	19-Nov-2014	Y	9	(ggggg)	N	
RP	Wilkins	975XLTCU	1/2	H	5-Apr-2007	5-Apr-2016	N	8	(ii),ooo	N	
RP	Wilkins	975XLTCU	3/4	H	27-Jun-2006	27-Jun-2015	N	8	(ii),ooo,xxx	N	
RP	Wilkins	975XLTCU	1	H	27-Jun-2006	27-Jun-2015	N	8	(ii),ooo,xxx	N	
RP	Wilkins	975XLTCU	1 1/4	H	27-Jun-2006	27-Jun-2015	N	8	(ii),ooo,xxx	N	
RP	Wilkins	975XLTCU	1 1/2	H	27-Jun-2006	27-Jun-2015	N	8	(ii),ooo,xxx	N	
RP	Wilkins	975XLTCU	2	H	27-Jun-2006	27-Jun-2015	N	8	(ii),ooo,xxx	N	
RP	Wilkins	975XLU	3/4	H	2-Sep-1993	2-Sep-2014	N	8	(ggg),xxx	N	
RP	Wilkins	975XLU	1	H	2-Sep-1993	2-Sep-2014	N	8	(ggg),xxx	N	
RP	Wilkins	975XLU	1 1/2	H	2-Sep-1993	2-Sep-2014	N	8	(ggg),xxx	N	
RP	Wilkins	975XLU	2	H	2-Sep-1993	2-Sep-2014	N	8	(ggg),xxx	N	
RP	Wilkins	975XLV	3/4	VUVD	7-Jan-2001	7-Jan-2016	N	9	(ii),ooo	N	
RP	Wilkins	975XLV	3/4	VUVU	7-Jan-2001	7-Jan-2016	N	9	(ii),ooo	N	
RP	Wilkins	975XLV	1	VUVD	7-Jan-2001	7-Jan-2016	N	9	(ii),ooo	N	
RP	Wilkins	975XLV	1	VUVU	7-Jan-2001	7-Jan-2016	N	9	(ii),ooo	N	
RP	Wilkins	MBC-10"	10								
RP	Wilkins	MBC-8"	8								
RP	Apollo/Conbraco	RPLF4AN	4	VUVU	11-Jun-2014		Y	10	(yyy), cccc, dddd, mmmm, nnnn, xxxxx, yyyyy, zzzzz, aaaaaa	N	
RP	Apollo/Conbraco	RPLF4AN	6	VUVD	10-Jun-2014		Y	10	(yyy), cccc, dddd, mmmm, nnnn, xxxxx, yyyyy, zzzzz, aaaaaa	N	
RP	Apollo/Conbraco	RPLF4AN	6	VUVU	11-Jun-2014		Y	10	(yyy), cccc, dddd, mmmm, nnnn, xxxxx, yyyyy, zzzzz, aaaaaa	N	
RPDA	Ames	5000	4	H	28-Dec-1989	20-Dec-2013	N	8	(uu),ee,ff,gg,hh,ll,mm,oo,pp,tt,ccc,ddd,ffff,gggg	N	Conbraco 4020402 3/4 (H)
RPDA	Ames	5000	6	H	28-Dec-1989	20-Dec-2013	N	8	(uu),ee,ff,gg,hh,ll,mm,oo,pp,tt,ccc,ddd,ffff,gggg	N	Conbraco 4020402 3/4 (H)
RPDA	Ames	5000	8	H	1-Jul-1989	1-Jul-2013	N	8	(uu),ee,ff,gg,hh,ll,mm,oo,pp,tt,ccc,ddd,ffff,gggg	N	Conbraco 4020402 3/4 (H)
RPDA	Ames	5000	10	H	19-Mar-1990	19-Mar-2014	N	8	uu,ee,ff,gg,hh,ll,mm,oo,pp,tt,ccc,ddd,ffff,gggg	Y	Conbraco 4020402 3/4 (H)
RPDA	Ames	5000CIV	2 1/2	H	7-Jul-2000	7-Jul-2015	N	8	(pp),hh,mm,uu	N	Watts 909QT 3/4 (H)
RPDA	Ames	5000CIV	3	H	7-Jul-2000	7-Jul-2015	N	8	(pp),hh,mm,uu,eee	N	Watts 909QT 3/4 (H)
RPDA	Ames	5000CIV	4	H	7-Jul-2000	7-Jul-2015	N	8	(pp),hh,mm,uu,eee	N	Watts 909QT 3/4 (H)
RPDA	Ames	5000CIV	6	H	7-Jul-2000	7-Jul-2015	N	8	(pp),hh,mm,uu,eee	N	Watts 909QT 3/4 (H)
RPDA	Ames	5000CIV	8	H	7-Jul-2000	7-Jul-2015	N	8	(pp),hh,mm,uu,eee	N	Watts 909QT 3/4 (H)
RPDA	Ames	5000CIV	10	H	7-Jul-2000	7-Jul-2015	N	8	(pp),hh,mm,uu,eee	N	Watts 909QT 3/4 (H)
RPDA	Ames	Colt 500-GV	2 1/2	H	20-Jun-2006	20-Jun-2015	N	9	(zzz)	N	Watts 919QT 3/4" (H)
RPDA	Ames	Colt 500-GV	3	H	20-Jun-2006	20-Jun-2015	N	9	(zzz)	N	Watts 919QT 3/4" (H)
RPDA	Ames	Colt 500-GV	4	H	20-Jun-2006	20-Jun-2015	N	9	(zzz)	N	Watts 919QT 3/4" (H)
RPDA	Ames	Colt 500-GV	6	H	20-Jun-2006	20-Jun-2015	N	9	(zzz)	N	Watts 919QT 3/4" (H)
RPDA	Ames	Colt 500-GV	8	H	15-Nov-2010	15-Nov-2013	N	9	(zzz)		Watts 919QT 3/4" (H)
RPDA	Ames	Colt 500-GV	10	H	27-Sep-2010	27-Sep-2013	N	9	(zzz)	N	Watts 919QT 3/4" (H)
RPDA	Ames	Colt 500NBF	2 1/2	VUVD	24-Jun-2013		N	9	(yyy)	N	Watts 919QT 3/4" (H)
RPDA	Ames	Colt 500NBF	3	VUVD	28-May-2009	28-May-2015	N	9	(yyy)	N	Watts 919QT 3/4" (H)
RPDA	Ames	Colt 500NBF	4	VUVD	28-May-2009	28-May-2015	N	9	(yyy)	N	Watts 919QT 3/4" (H)
RPDA	Ames	Colt 500NBF	8	VUVD	14-Jun-2013		N	9	(yyy)		Watts 919QT 3/4" (H)
RPDA	Ames	Colt 500NGV	2 1/2	VUVD	28-May-2009	28-May-2015	N	9	(zzz)	N	Watts 919QT 3/4" (H)
RPDA	Ames	Colt 500NGV	3	VUVD	7-Apr-2009	7-Apr-2015	N	9	(zzz)	N	Watts 919QT 3/4" (H)
RPDA	Ames	Colt 500NGV	4	VUVD	7-Apr-2009	7-Apr-2015	N	9	(zzz)	N	Watts 919QT 3/4" (H)
RPDA	Ames	Colt 500NGV	6	VUVD	15-Nov-2010	15-Nov-2013	N	9	(zzz)		Watts 919QT 3/4" (H)
RPDA	Ames	Colt 500NGV	8	VUVD	14-Jun-2013		N	9	(zzz)		Watts 919QT 3/4" (H)
RPDA	Ames	Colt 500ZBF	2 1/2	VUVU	24-Jun-2013		N	9	(yyy)	N	Watts 919QT 3/4" (H)
RPDA	Ames	Colt 500ZBF	3	VUVU	24-Jun-2013		N	9	(yyy)	N	Watts 919QT 3/4" (H)
RPDA	Ames	Colt 500ZBF	4	VUVU	24-Jun-2013		N	9	(yyy)	N	Watts 919QT 3/4" (H)
RPDA	Ames	Colt 500ZBF	8	VUVU	14-Jun-2013		N	9	(yyy)		Watts 919QT 3/4" (H)
RPDA	Ames	Colt 500ZGV	2 1/2	VUVU	24-Jun-2013		N	9	(zzz)	N	Watts 919QT 3/4" (H)
RPDA	Ames	Colt 500ZGV	3	VUVU	24-Jun-2013		N	9	(zzz)	N	Watts 919QT 3/4" (H)
RPDA	Ames	Colt 500ZGV	4	VUVU	24-Jun-2013		N	9	(zzz)	N	Watts 919QT 3/4" (H)
RPDA	Ames	Colt 500ZGV	8	VUVU	14-Jun-2013		N	9	(zzz)		Watts 919QT 3/4" (H)
AVB	Watts	288AM5	3/4	VUH	1-Nov-1991	1-Nov-2015	N	8		N	
AVB	Watts	288AM5	1	VUH	1-Nov-1991	1-Nov-2015	N	8		N	
DC	Ames	2000-DC	10	H	4-Aug-1987	2-Aug-2014	N	7	tt,ee,ff,gg,hh,ll,mm,oo,pp,uu,ccc,ddd,ffff,gggg	Y	
DC	Ames	2000-DCA	4	H	11-Jan-1988	11-Jan-2015	N	7	tt,ee,ff,gg,hh,ll,mm,oo,pp,uu,ccc,ddd,ffff,gggg	Y	
DC	Ames	2000-DCA	6	H	11-Jan-1988	11-Jan-2015	N	7	tt,ee,ff,gg,hh,ll,mm,oo,pp,uu,ccc,ddd,ffff,gggg	Y	
DC	Ames	2000-DCA	8	H	11-Jan-1988	11-Jan-2015	N	7	tt,ee,ff,gg,hh,ll,mm,oo,pp,uu,ccc,ddd,ffff,gggg	Y	
DC	Ames	2000-G-DC	10	H	4-Aug-1987	4-Aug-2014	N	7	tt,ee,ff,gg,hh,ll,mm,oo,pp,uu,ccc,ddd,ffff,gggg	Y	
DC	Ames	2000-G-DCA	4	H	11-Jan-1988	11-Jan-2015	N	7	tt,ee,ff,gg,hh,ll,mm,oo,pp,uu,ccc,ddd,ffff,gggg	Y	
DC	Ames	2000-G-DCA	6	H	11-Jan-1988	11-Jan-2015	N	7	tt,ee,ff,gg,hh,ll,mm,oo,pp,uu,ccc,ddd,ffff,gggg	Y	
DC	Ames	2000-G-DCA	8	H	11-Jan-1988	11-Jan-2015	N	7	tt,ee,ff,gg,hh,ll,mm,oo,pp,uu,ccc,ddd,ffff,gggg	Y	
DC	Ames	2000B	1/2	H	6-Dec-1983	6-Dec-2013	N	8	(vv),xx,ooo,hhhh,pppp,rrrrr	N	
DC	Ames	2000B	1/2	H	16-Jun-1997	16-Jun-2015	N	9	(vv),xx,ooo,hhhh,pppp,rrrrr	N	
DC	Ames	2000B	1/2	VU	16-Jun-1997	16-Jun-2015	N	9	(vv),xx,ooo,hhhh,pppp,rrrrr	N	
DC	Ames	2000B	3/4	H	5-Apr-1993	5-Apr-2014	N	8	(vv),xx,ooo,hhhh,pppp,rrrrr	N	
DC	Ames	2000B	3/4	VU	27-Aug-1996	27-Aug-2014	N	8	(vv),xx,ooo,hhhh,pppp,rrrrr	N	
DC	Ames	2000B	1	H	18-May-1998	18-May-2013	N	9	(vv),xx,ooo,hhhh,pppp,rrrrr	N	
DC	Ames	2000B	1	H	26-Feb-1991	26-Feb-2015	N	8	(vv),xx,ooo,hhhh,pppp,rrrrr	N	
DC	Ames	2000B	1	VU	18-May-1998	18-May-2013	N	9	(vv),xx,ooo,hhhh,pppp,rrrrr	N	
DC	Ames	2000B	1 1/4	H	1-Oct-1996	1-Oct-2014	N	8	(vv),xx,ooo,hhhh,pppp,rrrrr	N	
DC	Ames	2000B	1 1/4	VU	1-Oct-1996	1-Oct-2014	N	8	(vv),xx,ooo,hhhh,pppp,rrrrr	N	
DC	Ames	2000B	1 1/2	H	24-May-1994	24-May-2015	N	8	(vv),xx,ooo,hhhh,pppp,rrrrr	N	
DC	Ames	2000B	1 1/2	VU	11-Mar-1996	11-Mar-2014	N	8	(vv),xx,ooo,hhhh,pppp,rrrrr	N	
DC	Ames	2000B	2	H	30-Jun-1992	30-Jun-2013	N	8	(vv),xx,ooo,hhhh,pppp,rrrrr	N	
DC	Ames	2000B	2	VU	8-Mar-1996	8-Mar-2014	N	8	(vv),xx,ooo,hhhh,pppp,rrrrr	N	
DC	Ames	2000B-FP	3/4	H	1-Sep-2009	1-Sep-2015	N	9	(eeeee)	N	
DC	Ames	2000B-FP	1	H	1-Sep-2009	1-Sep-2015	N	9	(eeeee)	N	
DC	Ames	2000B-FP	1 1/4	H	1-Sep-2009	1-Sep-2015	N	9	(eeeee)	N	
DC	Ames	2000B-FP	1 1/2	H	1-Sep-2009	1-Sep-2015	N	9	(eeeee)	N	
DC	Ames	2000B-FP	2	H	1-Sep-2009	1-Sep-2015	N	9	(eeeee)	N	
DC	Ames	2000BM3	3/4	H	27-Mar-2000	27-Mar-2015	N	9	(vv),xx,ooo,hhhh,pppp,rrrrr	N	
DC	Ames	2000BM3	3/4	VU	27-Mar-2000	27-Mar-2015	N	9	(vv),xx,ooo,hhhh,pppp,rrrrr	N	
DC	Ames	2000BM3-FP	3/4	H	1-Sep-2009	1-Sep-2015	N	9	(eeeee)	N	
DC	Ames	2000CIV	4	H	15-Jan-1982	15-Jan-2015	N	6	(oo),gg,hh,ll,mm,pp,tt,uu,eee	N	
DC	Ames	2000CIV	4	VU	11-Mar-1996	11-Mar-2014	N	8	(oo),gg,hh,ll,mm,pp,tt,uu,eee	N	
DC	Ames	2000CIV	6	H	18-May-1982	18-May-2015	N	6	(oo),gg,hh,ll,mm,pp,tt,uu,eee	N	
DC	Ames	2000CIV	6	VU	5-Dec-1996	5-Dec-2014	N	8	(oo),gg,hh,ll,mm,pp,tt,uu,eee	N	
DC	Ames	2000CIV	8	H	6-Jul-1981	6-Jul-2014	N	6	(oo),gg,hh,ll,mm,pp,tt,uu,eee	N	
DC	Ames	2000CIV	8	VU	5-Dec-1996	5-Dec-2014	N	8	(oo),gg,hh,ll,mm,pp,tt,uu,eee	N	
DC	Ames	2000CIV	10	H	16-Mar-1983	16-Mar-2016	N	6	(oo),gg,hh,ll,mm,pp,tt,uu,eee	N	
DC	Ames	2000CIV	10	VU	5-Dec-1996	5-Dec-2014	N	8	(oo),gg,hh,ll,mm,pp,tt,uu,eee	N	
DC	Ames	2000SE	2 1/2	H	10-Sep-1996	10-Sep-2014	N	8	(mm),ee,ff,gg,hh,ll,mm,oo,pp,tt,uu,ccc,ddd,ffff,gggg	N	
DC	Ames	2000SE	6	H	22-Nov-1993	22-Nov-2014	N	8	tt,ee,ff,gg,hh,ll,mm,oo,pp,uu,ccc,ddd,ffff,gggg	Y	
DC	Ames	2000SE	8	H	9-Sep-1992	9-Sep-2013	N	8	tt,ee,ff,gg,hh,ll,mm,oo,pp,uu,ccc,ddd,ffff,gggg	Y	
DC	Ames	2000SS	3/4	H	5-May-1995	5-May-2013	N	8	ii	Y	
DC	Ames	2000SS	1	H	5-May-1995	5-May-2013	N	8	ii	Y	
DC	Ames	2000SS	1 1/4	H	14-Jul-1995	14-Jul-2013	N	8	ii	Y	
DC	Ames	2000SS	1 1/2	H	13-Oct-1995	13-Oct-2013	N	8	ii	Y	
DC	Ames	2000SS	2	H	13-Oct-1995	13-Oct-2013	N	8	ii	Y	
DC	Ames	2000SS	2 1/2	H	11-Jul-1991	11-Jul-2015	N	8	(tt),ee,ff,gg,hh,pp,uu,ccc,ddd	N	
DC	Ames	2000SS	2 1/2	H	11-Jul-1991	11-Jul-2015	Y	8	ll,mm,oo,ffff,gggg	N	
DC	Ames	2000SS	3	H	11-Jul-1991	11-Jul-2015	N	8	(tt),ee,ff,gg,hh,pp,uu,ccc,ddd	N	
DC	Ames	2000SS	3	H	11-Jul-1991	11-Jul-2015	Y	8	ll,mm,oo,ffff,gggg	N	
DC	Ames	2000SS	4	H	11-Jul-1991	11-Jul-2015	N	8	(tt),ee,ff,gg,hh,pp,uu,ccc,ddd	N	
DC	Ames	2000SS	4	H	11-Jul-1991	11-Jul-2015	Y	8	ll,mm,oo,ffff,gggg	N	
DC	Ames	2000SS	6	H	9-Sep-1992	9-Sep-2013	N	8	(tt),ee,ff,gg,hh,pp,uu,ccc,ddd	N	
DC	Ames	2000SS	6	H	9-Sep-1992	9-Sep-2013	Y	8	ll,mm,oo,ffff,gggg	N	
DC	Ames	2000SS	8	H	16-Sep-1996	16-Sep-2014	N	8	(tt),ee,ff,gg,hh,pp,uu,ccc,ddd	N	
DC	Ames	2000SS	8	H	16-Sep-1996	16-Sep-2014	Y	8	ll,mm,oo,ffff,gggg	N	
DC	Ames	2000SS	10	H	16-Feb-2001	16-Feb-2016	N	8	pp,	N	
DC	Ames	2000SS	10	H	16-Feb-2001	16-Feb-2016	Y	8	(ll),mm,oo	N	
DC	Ames	2000SS	12	H	22-Jul-2009	22-Jul-2015	N	9	pp,	N	
DC	Ames	2000SS	12	H	22-Jul-2009	22-Jul-2015	Y	9	(ll),mm,oo	N	
DC	Ames	2000SS	12	VU	22-Feb-2011	22-Feb-2014	N	9	pp,	N	
DC	Ames	2000SS	12	VU	22-Feb-2011	22-Feb-2014	Y	9	(ll),mm,oo	N	
DC	Ames	2000SS-M	4	H	5-May-1995	5-May-2013	N	8	(tt),ee,ff,gg,hh,ll,mm,oo,pp,uu,ccc,ddd,ffff,gggg	N	
DC	Ames	2000SS-M	6	H	5-May-1995	5-May-2013	N	8	(tt),ee,ff,gg,hh,ll,mm,oo,pp,uu,ccc,ddd,ffff,gggg	N	
DC	Ames	200B	1/2	H	21-Apr-2006	21-Apr-2015	N	9	(vv),xx,ooo,hhhh,pppp,rrrrr	N	
DC	Ames	200B	1/2	VD	21-Apr-2006	21-Apr-2015	N	9	(vv),xx,ooo,hhhh,pppp,rrrrr	N	
DC	Ames	200B	1/2	VU	21-Apr-2006	21-Apr-2015	N	9	(vv),xx,ooo,hhhh,pppp,rrrrr	N	
DC	Ames	200B	3/4	H	21-Apr-2006	21-Apr-2015	N	9	(vv),xx,ooo,hhhh,pppp,rrrrr	N	

Type	Manufacturer	Model	Size	Orientation(s)	Approved	Renewed	≤0.25% Pb	Manual	Shutoffs	Spare Parts	Bypass
RPDA	Apollo/Conbraco	407AC3	4								
RPDA	Apollo/Conbraco	RPDA40	3	H	27-Jul-1993	27-Jul-2014	N	8	(uu),cc,mm	Y	Apollo/Conbraco 4020402 3/4" (H), Apollo/Conbraco RP40 3/4" (H)
RPDA	Apollo/Conbraco	RPDA40	4	H	27-Jul-1993	27-Jul-2014	N	8	(uu),cc,mm	Y	Apollo/Conbraco 4020402 3/4" (H), Apollo/Conbraco RP40 3/4" (H)
RPDA	Apollo/Conbraco	RPDA40	6	H	20-Oct-1993	20-Oct-2014	N	8	(uu),cc,mm	Y	Apollo/Conbraco 4020402 3/4" (H), Apollo/Conbraco RP40 3/4" (H)
RPDA	Apollo/Conbraco	RPDA40	8	H	24-May-1993	24-May-2014	N	8	(uu),cc,mm	Y	Apollo/Conbraco 4020402 3/4" (H), Apollo/Conbraco RP40 3/4" (H)
RPDA	Apollo/Conbraco	RPDA40	10	H	13-Apr-1993	13-Apr-2014	N	8	(uu),cc,mm	Y	Apollo/Conbraco 4020402 3/4" (H), Apollo/Conbraco RP40 3/4" (H)
RPDA	Apollo/Conbraco	RPDALF4A	2 1/2	H	10-Jun-2014		Y	10	(yyy), cccc, dddd, mmmm, nnnn, xxxxx, yyyyy, zzzzz, aaaaaa	N	Apollo RPLF4A 1/2" (H)
RPDA	Apollo/Conbraco	RPDALF4A	3	H	10-Jun-2014		Y	10	(yyy), cccc, dddd, mmmm, nnnn, xxxxx, yyyyy, zzzzz, aaaaaa	N	Apollo RPLF4A 1/2" (H)
RPDA	Apollo/Conbraco	RPDALF4A	4	H	24-Jun-2013		Y	10	(yyy), cccc, dddd, mmmm, nnnn, xxxxx, yyyyy, zzzzz, aaaaaa	N	Apollo RPLF4A 1/2" (H)
RPDA	Apollo/Conbraco	RPDALF4A	6	H	24-Jun-2013		Y	10	(yyy), cccc, dddd, mmmm, nnnn, xxxxx, yyyyy, zzzzz, aaaaaa	N	Apollo RPLF4A 1/2" (H)
RPDA	Apollo/Conbraco	RPDALF4AN	2 1/2	VUVD	12-May-2016		Y	10	(yyy), cccc, dddd, mmmm, nnnn, xxxxx, yyyyy, zzzzz, aaaaaa	N	Apollo RPLF4A 1/2" (H)
RPDA	Apollo/Conbraco	RPDALF4AN	2 1/2	VUVU	12-May-2016		Y	10	(yyy), cccc, dddd, mmmm, nnnn, xxxxx, yyyyy, zzzzz, aaaaaa	N	Apollo RPLF4A 1/2" (H)
RPDA	Apollo/Conbraco	RPDALF4AN	3	VUVD	12-May-2016		Y	10	(yyy), cccc, dddd, mmmm, nnnn, xxxxx, yyyyy, zzzzz, aaaaaa	N	Apollo RPLF4A 1/2" (H)
RPDA	Apollo/Conbraco	RPDALF4AN	3	VUVU	12-May-2016		Y	10	(yyy), cccc, dddd, mmmm, nnnn, xxxxx, yyyyy, zzzzz, aaaaaa	N	Apollo RPLF4A 1/2" (H)
RPDA	Apollo/Conbraco	RPDALF4AN	4	VUVD	10-Jun-2014		Y	10	(yyy), cccc, dddd, mmmm, nnnn, xxxxx, yyyyy, zzzzz, aaaaaa	N	Apollo RPLF4A 1/2" (H)
RPDA	Apollo/Conbraco	RPDALF4AN	4	VUVU	11-Jun-2014		Y	10	(yyy), cccc, dddd, mmmm, nnnn, xxxxx, yyyyy, zzzzz, aaaaaa	N	Apollo RPLF4A 1/2" (H)
RPDA	Apollo/Conbraco	RPDALF4AN	6	VUVD	12-May-2015		Y	10	(yyy), cccc, dddd, mmmm, nnnn, xxxxx, yyyyy, zzzzz, aaaaaa	N	Apollo RPLF4A 1/2" (H)
RPDA	Apollo/Conbraco	RPDALF4AN	6	VUVU	12-May-2015		Y	10	(yyy), cccc, dddd, mmmm, nnnn, xxxxx, yyyyy, zzzzz, aaaaaa	N	Apollo RPLF4A 1/2" (H)
RPDA	Apollo/Conbraco	RPDALF4AR	2 1/2	H	21-Dec-2015		N	10	(cccc), dddd, mmmm, nnnn, xxxxx, yyyyy, zzzzz, aaaaaa	N	Apollo RPLF4A 1/2"
RPDA	Apollo/Conbraco	RPDALF4AR	3	H	21-Dec-2015		N	10	(cccc), dddd, mmmm, nnnn, xxxxx, yyyyy, zzzzz, aaaaaa	N	Apollo RPLF4A 1/2"
RPDA	Apollo/Conbraco	RPDALF4AR	4	H	21-Dec-2015		N	10	(cccc), dddd, mmmm, nnnn, xxxxx, yyyyy, zzzzz, aaaaaa	N	Apollo RPLF4A 1/2"
RPDA	Apollo/Conbraco	RPDALF4AR	6	H	21-Dec-2015		N	10	(cccc), dddd, mmmm, nnnn, xxxxx, yyyyy, zzzzz, aaaaaa	N	Apollo RPLF4A 1/2"
RPDA	Cla-Val	18-4	10	H	23-Aug-1990	23-Aug-2014	N	8	hh,gg,qq,rr	Y	Cla-Val RP2 3/4 (H)
RPDA	Conbraco						N				
RPDA	Febco	826 Type YD	2 1/2								
RPDA	Febco	826 Type YD	3								
RPDA	Febco	826 Type YD	4								
RPDA	Febco	826 Type YD	6								
RPDA	Febco	826 Type YD	8								
RPDA	Febco	826 Type YD	10								
RPDA	Febco	826YD	2 1/2	H	11-Nov-1988	11-Nov-2015	N	8	(ff),mm,oo,pp,uu,zzz,ffff,gggg	N	Febco 825Y 3/4 (H)
RPDA	Febco	826YD	3	H	11-Nov-1988	11-Nov-2015	N	8	(ff),mm,oo,pp,uu,zzz,ffff,gggg	N	Febco 825Y 3/4 (H)
RPDA	Febco	826YD	4	H	14-Oct-1988	14-Oct-2015	N	8	(ff),mm,oo,pp,uu,zzz,ffff,gggg	N	Febco 825Y 3/4 (H)
RPDA	Febco	826YD	6	H	1-Mar-1990	1-Mar-2014	N	8	(ff),mm,oo,pp,uu,zzz,ffff,gggg	N	Febco 825Y 3/4 (H)
RPDA	Febco	826YD	8	H	22-Jun-1990	22-Jun-2014	N	8	(ff),mm,oo,pp,uu,zzz,ffff,gggg	N	Febco 825Y 3/4 (H)
RPDA	Febco	826YD	10	H	22-Jun-1990	22-Jun-2014	N	8	(ff),mm,oo,pp,uu,zzz,ffff,gggg	N	Febco 825Y 3/4 (H)
RPDA	Neptune						N				
RPDA	Watts	009NRSRPDA	4	H	1-Feb-1995	1-Feb-2016	N	8	oo,gg,ll,tt	Y	Watts 009M2QT 3/4 (H)
RPDA	Watts	009NRSRPDA	6	H	1-Feb-1995	1-Feb-2016	N	8	oo,gg,ll,tt	Y	Watts 009M2QT 3/4 (H)
RPDA	Watts	009OSYRPDA	4	H	1-Feb-1995	1-Feb-2016	N	8	pp,hh,mm,uu,zz	Y	Watts 009M2QT 3/4 (H)
RPDA	Watts	009OSYRPDA	6	H	1-Feb-1995	1-Feb-2016	N	8	pp,hh,mm,uu,zz	Y	Watts 009M2QT 3/4 (H)
RPDA	Watts	909DDC	6								
RPDA	Watts	909DDCM2	3								
RPDA	Watts	909RPDA	2 1/2	H	16-Jun-1999	16-Jun-2014	N	8	(pp),hh,mm,uu,zz,ffff,gggg	N	Watts 909QT 3/4 (H)
RPDA	Watts	909RPDA	3	H	5-Oct-1988	5-Oct-2015	N	8	(pp),hh,mm,uu,zz,eee,ffff,gggg	N	Watts 909QT 3/4 (H)
RPDA	Watts	909RPDA	4	H	9-Feb-1988	1-Feb-2015	N	8	(pp),hh,mm,uu,zz,eee,ffff,gggg	N	Watts 909QT 3/4 (H)
RPDA	Watts	909RPDA	6	H	5-Oct-1988	5-Oct-2015	N	8	(pp),hh,mm,uu,zz,eee,ffff,gggg	N	Watts 909QT 3/4 (H)
RPDA	Watts	909RPDA	8	H	14-Feb-1988	14-Feb-2015	N	8	(pp),hh,mm,uu,zz,eee,ffff,gggg	N	Watts 909QT 3/4 (H)
RPDA	Watts	909RPDA	10	H	15-Feb-1988	15-Feb-2015	N	8	(pp),hh,mm,uu,zz,eee,ffff,gggg	N	Watts 909QT 3/4 (H)
RPDA	Watts	957NRPDA-BF	2 1/2	VUVD	24-Jun-2013		N	9	(yyy)	N	Watts 919QT 3/4" (H)
RPDA	Watts	957NRPDA-BF	3	VUVD	7-Apr-2009	7-Apr-2015	N	9	(yyy)	N	Watts 919QT 3/4" (H)
RPDA	Watts	957NRPDA-BF	4	VUVD	7-Apr-2009	7-Apr-2015	N	9	(yyy)	N	Watts 919QT 3/4" (H)
RPDA	Watts	957NRPDA-BF	8	VUVD	14-Jun-2013		N	9	(yyy)		Watts 919QT 3/4" (H)
RPDA	Watts	957NRPDA-GV	2 1/2	VUVD	7-Apr-2009	7-Apr-2015	N	9	(zzz)	N	Watts 919QT 3/4" (H)
RPDA	Watts	957NRPDA-GV	3	VUVD	7-Apr-2009	7-Apr-2015	N	9	(zzz)	N	Watts 919QT 3/4" (H)
RPDA	Watts	957NRPDA-GV	4	VUVD	7-Apr-2009	7-Apr-2015	N	9	(zzz)	N	Watts 919QT 3/4" (H)
RPDA	Watts	957NRPDA-GV	6	VUVD	15-Nov-2010	15-Nov-2013	N	9	(zzz)		Watts 919QT 3/4" (H)
RPDA	Watts	957NRPDA-GV	8	VUVD	14-Jun-2013		N	9	(zzz)		Watts 919QT 3/4" (H)
RPDA	Watts	957RPDA-GV	2 1/2	H	20-Jun-2006	20-Jun-2015	N	9	(zzz)	N	Watts 919QT 3/4" (H)
RPDA	Watts	957RPDA-GV	3	H	20-Jun-2006	20-Jun-2015	N	9	(zzz)	N	Watts 919QT 3/4" (H)
RPDA	Watts	957RPDA-GV	4	H	20-Jun-2006	20-Jun-2015	N	9	(zzz)	N	Watts 919QT 3/4" (H)
RPDA	Watts	957RPDA-GV	6	H	20-Jun-2006	20-Jun-2015	N	9	(zzz)	N	Watts 919QT 3/4" (H)
RPDA	Watts	957RPDA-GV	8	H	15-Nov-2010	15-Nov-2013	N	9	(zzz)		Watts 919QT 3/4" (H)
RPDA	Watts	957RPDA-GV	10	H	27-Sep-2010	27-Sep-2013	N	9	(zzz)	N	Watts 919QT 3/4" (H)
RPDA	Watts	957ZRPDA-BF	2 1/2	VUVU	24-Jun-2013		N	9	(yyy)	N	Watts 919QT 3/4" (H)
RPDA	Watts	957ZRPDA-BF	3	VUVU	24-Jun-2013		N	9	(yyy)	N	Watts 919QT 3/4" (H)
RPDA	Watts	957ZRPDA-BF	4	VUVU	24-Jun-2013		N	9	(yyy)	N	Watts 919QT 3/4" (H)
RPDA	Watts	957ZRPDA-BF	8	VUVU	14-Jun-2013		N	9	(yyy)		Watts 919QT 3/4" (H)
RPDA	Watts	957ZRPDA-GV	2 1/2	VUVU	24-Jun-2013		N	9	(zzz)	N	Watts 919QT 3/4" (H)
RPDA	Watts	957ZRPDA-GV	3	VUVU	24-Jun-2013		N	9	(zzz)	N	Watts 919QT 3/4" (H)
RPDA	Watts	957ZRPDA-GV	4	VUVU	24-Jun-2013		N	9	(zzz)	N	Watts 919QT 3/4" (H)
RPDA	Watts	957ZRPDA-GV	8	VUVU	14-Jun-2013		N	9	(zzz)		Watts 919QT 3/4" (H)
RPDA	Watts	967NRPDA-BF	2 1/2	VUVD	24-Jun-2013		N	9	(yyy)	N	Watts 919QT 3/4" (H)
RPDA	Watts	967NRPDA-BF	3	VUVD	7-Apr-2009	7-Apr-2015	N	9	(yyy)	N	Watts 919QT 3/4" (H)
RPDA	Watts	967NRPDA-BF	4	VUVD	15-Nov-2010	15-Nov-2013	N	9	(yyy)		Watts 919QT 3/4" (H)
RPDA	Watts	967NRPDA-BF	6	VUVD	14-Jun-2013		N	9	(yyy)		Watts 919QT 3/4" (H)
RPDA	Watts	967NRPDA-GV	2 1/2	VUVD	7-Apr-2009	7-Apr-2015	N	9	(zzz)	N	Watts 919QT 3/4" (H)
RPDA	Watts	967NRPDA-GV	3	VUVD	7-Apr-2009	7-Apr-2015	N	9	(zzz)	N	Watts 919QT 3/4" (H)
RPDA	Watts	967NRPDA-GV	4	VUVD	15-Nov-2010	15-Nov-2013	N	9	(zzz)		Watts 919QT 3/4" (H)
RPDA	Watts	967NRPDA-GV	6	VUVD	14-Jun-2013		N	9	(zzz)		Watts 919QT 3/4" (H)
RPDA	Watts	967RPDA-GV	2 1/2	H	20-Jun-2006	20-Jun-2015	N	9	(zzz)	N	Watts 919QT 3/4" (H)
RPDA	Watts	967RPDA-GV	3	H	20-Jun-2006	20-Jun-2015	N	9	(zzz)	N	Watts 919QT 3/4" (H)
RPDA	Watts	967RPDA-GV	4	H	20-Jun-2006	20-Jun-2015	N	9	(zzz)	N	Watts 919QT 3/4" (H)
RPDA	Watts	967RPDA-GV	6	H	15-Nov-2010	15-Nov-2013	N	9	(zzz)		Watts 919QT 3/4" (H)
RPDA	Watts	967RPDA-GV	8	H	27-Sep-2010	27-Sep-2013	N	9	(zzz)	N	Watts 919QT 3/4" (H)
RPDA	Watts	967RPDA-GV	10	H	27-Sep-2010	27-Sep-2013	N	9	(zzz)	N	Watts 919QT 3/4" (H)
RPDA	Watts	967ZRPDA-BF	2 1/2	VUVU	24-Jun-2013		N	9	(yyy)	N	Watts 919QT 3/4" (H)
RPDA	Watts	967ZRPDA-BF	3	VUVU	24-Jun-2013		N	9	(yyy)	N	Watts 919QT 3/4" (H)
RPDA	Watts	967ZRPDA-BF	6	VUVU	14-Jun-2013		N	9	(yyy)		Watts 919QT 3/4" (H)
RPDA	Watts	967ZRPDA-GV	2 1/2	VUVU	24-Jun-2013		N	9	(zzz)	N	Watts 919QT 3/4" (H)
RPDA	Watts	967ZRPDA-GV	3	VUVU	24-Jun-2013		N	9	(zzz)	N	Watts 919QT 3/4" (H)
RPDA	Watts	967ZRPDA-GV	6	VUVU	14-Jun-2013		N	9	(zzz)		Watts 919QT 3/4" (H)
RPDA	Watts	990RPDA	4	H	1-Nov-1992	11-Nov-2013	N	8	pp,hh,mm,uu,zz	Y	Watts 009QT 3/4 (H)
RPDA	Watts	990RPDA	8	H	13-Jan-1993	13-Jan-2014	N	8	oo,gg,hh,ll,mm,pp,tt,uu	Y	Watts 009QT 3/4 (H)
RPDA	Watts	992RPDA	4	H	1-Nov-1992	11-Nov-2013	N	8	oo	Y	Watts 009QT 3/4 (H)
RPDA	Watts	992RPDA	10	H	13-Jan-1993	13-Jan-2014	N	8	oo	Y	Watts 009QT 3/4 (H)
RPDA	Watts	LF957NRPDA-BF	2 1/2	VUVD	8-Jan-2014		Y	9	(zzz)	N	Watts LF919QT 3/4" (H)
RPDA	Watts	LF957NRPDA-BF	3	VUVD	8-Jan-2014		Y	9	(zzz)	N	Watts LF919QT 3/4" (H)
RPDA	Watts	LF957NRPDA-BF	4	VUVD	8-Jan-2014		Y	9	(zzz)	N	Watts LF919QT 3/4" (H)
RPDA	Watts	LF957NRPDA-GV	2 1/2	VUVD	8-Jan-2014		Y	9	(zzz)	N	Watts LF919QT 3/4" (H)
RPDA	Watts	LF957NRPDA-GV	3	VUVD	8-Jan-2014		Y	9	(zzz)	N	Watts LF919QT 3/4" (H)
RPDA	Watts	LF957NRPDA-GV	4	VUVD	8-Jan-2014		Y	9	(zzz)	N	Watts LF919QT 3/4" (H)
RPDA	Watts	LF957RPDA-GV	2 1/2	H	15-May-2014		Y	9	(zzz)	N	Watts LF919QT 3/4" (H)
RPDA	Watts	LF957RPDA-GV	3	H	15-May-2014		Y	9	(zzz)	N	Watts LF919QT 3/4" (H)
RPDA	Watts	LF957RPDA-GV	4	H	15-May-2014		Y	9	(zzz)	N	Watts LF919QT 3/4" (H)
RPDA	Watts	LF957RPDA-GV	6	H	15-May-2014		Y	9	(zzz)	N	Watts LF919QT 3/4" (H)
RPDA	Watts	LF957RPDAGV	8	H	13-Aug-2015		Y	9	(zzz)	N	Watts LF919QT 3/4" (H)
RPDA	Watts	LF957RPDAGV	10	H	21-Sep-2015		Y	9	(zzz)	N	Watts LF919QT 3/4" (H)
RPDA	Watts	LF957ZRPDA-BF	2 1/2	VUVD	8-Jan-2014		Y	9	(zzz)	N	Watts LF919QT 3/4" (H)
RPDA	Watts	LF957ZRPDA-BF	3	VUVD	8-Jan-2014		Y	9	(zzz)	N	Watts LF919QT 3/4" (H)
RPDA	Watts	LF957ZRPDA-BF	4	VUVD	8-Jan-2014		Y	9	(zzz)	N	Watts LF919QT 3/4" (H)
RPDA	Watts	LF957ZRPDA-GV	2 1/2	VUVD	8-Jan-2014		Y	9	(zzz)	N	Watts LF919QT 3/4" (H)
RPDA	Watts	LF957ZRPDA-GV	3	VUVD	8-Jan-2014		Y	9	(zzz)	N	Watts LF919QT 3/4" (H)
RPDA	Watts	LF957ZRPDA-GV	4	VUVD	8-Jan-2014		Y	9	(zzz)	N	Watts LF919QT 3/4" (H)
RPDA	Wilkins	375ADA	2 1/2	H	20-Oct-2008	20-Oct-2014	N	9	(qqq),ttt,www,yyy,zzz,uuuu,vvvv,xxxx,yyyy,kkkkk,lllll	N	Wilkins 975XLD 3/4 (H)
RPDA	Wilkins	375ADA	2 1/2	H	18-Feb-2014		Y	9	(qqq),ttt,www,yyy,uuuu,vvvv,xxxx,yyyy,kkkkk,lllll	N	Wilkins 975XLD 3/4 (H)
RPDA	Wilkins	375ADA	3	H	20-Oct-2008	20-Oct-2014	N	9	(qqq),ttt,www,yyy,zzz,uuuu,vvvv,xxxx,yyyy,kkkkk,lllll	N	Wilkins 975XLD 3/4 (H)
RPDA	Wilkins	375ADA	3	H	18-Feb-2014		Y	9	(qqq),ttt,www,yyy,uuuu,vvvv,xxxx,yyyy,kkkkk,lllll	N	Wilkins 975XLD 3/4 (H)
RPDA	Wilkins	375ADA	4	H	2-Jun-2004	2-Jun-2013	N	9	(qqq),ttt,www,yyy,zzz,eeee,uuuu,vvvv,xxxx,yyyy,kkkkk,lllll	N	Wilkins 975XLD 3/4" (H)
RPDA	Wilkins	375ADA	4	H	18-Feb-2014		Y	9	(qqq),ttt,www,yyy,xxxx,yyyy,kkkkk,lllll	N	Wilkins 975XLD 3/4" (H)
RPDA	Wilkins	375ADA	6	H	25-Nov-2003	25-Nov-2015	N	9	(qqq),ttt,www,yyy,zzz,eeee,uuuu,vvvv,xxxx,yyyy,kkkkk,lllll	N	Wilkins 975XLD 3/4 (H)
RPDA	Wilkins	375ADA	6	H	18-Feb-2014		Y	9	(qqq),ttt,www,yyy,xxxx,yyyy,kkkkk,lllll	N	Wilkins 975XLD 3/4 (H)
RPDA	Wilkins	375ADA	8	H	15-Jun-2004	15-Jun-2013	N	9	(qqq),ttt,www,yyy,zzz,eeee,uuuu,vvvv,xxxx,yyyy,kkkkk,lllll	N	Wilkins 975XLD 3/4" (H)
RPDA	Wilkins	375ADA	8	H	18-Feb-2014		Y	9	(qqq),ttt,www,yyy,xxxx,yyyy,kkkkk,lllll	N	Wilkins 975XLD 3/4" (H)
RPDA	Wilkins	375ADA	10	H	11-Mar-2009	11-Mar-2015	N	9	(qqq), ttt, www, yyy, zzz, eeee,uuuu,vvvv,xxxx,yyyy,kkkkk,lllll	N	Wilkins 975XLD 3/4" (H)

Type	Manufacturer	Model	Size	Orientation(s)	Approved	Renewed	≤0.25% Pb	Manual	Shutoffs	Spare Parts	Bypass
RPDA	Wilkins	375ADA	10	H	18-Feb-2014		Y	9	(qqq),ttt,www,yyy,xxxx,yyyy,kkkkk,lllll	N	Wilkins 975XLD 3/4" (H)
RPDA	Wilkins	375ADAR	2 1/2	H	16-Jun-2010	16-Jun-2013	N	9	(qqq),ttt,www,yyy,zzz,uuuu,vvvv,xxxx,yyyy,kkkkk,lllll	N	Wilkins 975XLD 3/4 (H)
RPDA	Wilkins	375ADAR	2 1/2	H	18-Feb-2014		Y	9	(qqq),ttt,www,yyy,uuuu,vvvv,xxxx,yyyy,kkkkk,lllll	N	Wilkins 975XLD 3/4 (H)
RPDA	Wilkins	375ADAR	3	H	16-Jun-2010	16-Jun-2013	N	9	(qqq),ttt,www,yyy,zzz,uuuu,vvvv,xxxx,yyyy,kkkkk,lllll	N	Wilkins 975XLD 3/4 (H)
RPDA	Wilkins	375ADAR	3	H	18-Feb-2014		Y	9	(qqq),ttt,www,yyy,uuuu,vvvv,xxxx,yyyy,kkkkk,lllll	N	Wilkins 975XLD 3/4 (H)
RPDA	Wilkins	375ADAR	4	H	25-Mar-2010	25-Mar-2016	N	9	(qqq),ttt,www,yyy,zzz,eeee,uuuu,vvvv,xxxx,yyyy,kkkkk,lllll	N	Wilkins 975XLD 3/4 (H)
RPDA	Wilkins	375ADAR	4	H	18-Feb-2014		Y	9	(qqq),ttt,www,yyy,xxxx,yyyy,kkkkk,lllll	N	Wilkins 975XLD 3/4 (H)
RPDA	Wilkins	375ADAR	6	H	25-Mar-2010	25-Mar-2016	N	9	(qqq),ttt,www,yyy,zzz,eeee,uuuu,vvvv,xxxx,yyyy,kkkkk,lllll	N	Wilkins 975XLD 3/4 (H)
RPDA	Wilkins	375ADAR	6	H	18-Feb-2014		Y	9	(qqq),ttt,www,yyy,xxxx,yyyy,kkkkk,lllll	N	Wilkins 975XLD 3/4 (H)
RPDA	Wilkins	375ADAR	8	H	25-Mar-2010	25-Mar-2016	N	9	(qqq),ttt,www,yyy,zzz,eeee,uuuu,vvvv,xxxx,yyyy,kkkkk,lllll	N	Wilkins 975XLD 3/4 (H)
RPDA	Wilkins	375ADAR	8	H	18-Feb-2014		Y	9	(qqq),ttt,www,yyy,xxxx,yyyy,kkkkk,lllll	N	Wilkins 975XLD 3/4 (H)
RPDA	Wilkins	375ADAR	10	H	25-Mar-2010	25-Mar-2016	N	9	(qqq),ttt,www,yyy,zzz,eeee,uuuu,vvvv,xxxx,yyyy,kkkkk,lllll	N	Wilkins 975XLD 3/4 (H)
RPDA	Wilkins	375ADAR	10	H	18-Feb-2014		Y	9	(qqq),ttt,www,yyy,xxxx,yyyy,kkkkk,lllll	N	Wilkins 975XLD 3/4 (H)
RPDA	Wilkins	375ASTDA	2 1/2	H	14-Jun-2013		N	10	(yyy),qqq,ttt,uuuu,vvvv,xxxx,yyyy,kkkkk,lllll	N	Wilkins 975XLD 3/4 (H)
RPDA	Wilkins	375ASTDA	2 1/2	H	20-Feb-2014		Y	10	(yyy),qqq,ttt,uuuu,vvvv,xxxx,yyyy,kkkkk,lllll	N	Wilkins 975XLD 3/4 (H)
RPDA	Wilkins	375ASTDA	3	H	14-Jun-2013		N	10	(yyy),qqq,ttt,uuuu,vvvv,xxxx,yyyy,kkkkk,lllll	N	Wilkins 975XLD 3/4 (H)
RPDA	Wilkins	375ASTDA	3	H	20-Feb-2014		Y	10	(yyy),qqq,ttt,uuuu,vvvv,xxxx,yyyy,kkkkk,lllll	N	Wilkins 975XLD 3/4 (H)
RPDA	Wilkins	375ASTDA	4	H	14-Jun-2013		N	10	(yyy),qqq,ttt,uuuu,vvvv,xxxx,yyyy,kkkkk,lllll	N	Wilkins 975XLD 3/4" (H)
RPDA	Wilkins	375ASTDA	4	H	20-Feb-2014		Y	10	(yyy),qqq,ttt,uuuu,vvvv,xxxx,yyyy,kkkkk,lllll	N	Wilkins 975XLD 3/4" (H)
RPDA	Wilkins	375ASTDA	6	H	18-Sep-2014		Y	10	(yyyy),ttt,www,yyy,uuuu,vvvv,xxxx,kkkkk,lllll	N	Wilkins 975XLD 3/4" (H)
RPDA	Wilkins	375ASTDA	8	H	18-Sep-2014		Y	10	(yyyy),ttt,www,yyy,uuuu,vvvv,xxxx,kkkkk,lllll	N	Wilkins 975XLD 3/4" (H)
RPDA	Wilkins	375ASTDA	10	H	18-Sep-2014		Y	10	(yyyy),ttt,www,yyy,uuuu,vvvv,xxxx,kkkkk,lllll	N	Wilkins 975XLD 3/4" (H)
RPDA	Wilkins	375ASTDAR	3	H	9-Oct-2014		Y	10	(yyyy),ttt,www,yyy,uuuu,vvvv,xxxx,kkkkk,lllll	N	Wilkins 975XLD 3/4" (H)
RPDA	Wilkins	375ASTDAR	4	H	9-Oct-2014		Y	10	(yyyy),ttt,www,yyy,uuuu,vvvv,xxxx,kkkkk,lllll	N	Wilkins 975XLD 3/4" (H)
RPDA	Wilkins	375ASTDAR	6	H	18-Sep-2014		Y	10	(yyyy),ttt,www,yyy,uuuu,vvvv,xxxx,kkkkk,lllll	N	Wilkins 975XLD 3/4" (H)
RPDA	Wilkins	375ASTDAR	8	H	18-Sep-2014		Y	10	(yyyy),ttt,www,yyy,uuuu,vvvv,xxxx,kkkkk,lllll	N	Wilkins 975XLD 3/4" (H)
RPDA	Wilkins	375ASTDAR	10	H	18-Sep-2014		Y	10	(yyyy),ttt,www,yyy,uuuu,vvvv,xxxx,kkkkk,lllll	N	Wilkins 975XLD 3/4" (H)
RPDA	Wilkins	375ASTDAR	2 1/2"	H	9-Oct-2014		Y	10	(yyyy),ttt,www,yyy,uuuu,vvvv,xxxx,kkkkk,lllll	N	Wilkins 975XLD 3/4" (H)
RPDA	Wilkins	375DA	2 1/2	H	8-Oct-2002	8-Oct-2014	N	9	(hh),ff,mm,uu,zz,vvvv,wwww,yyyy,zzzz,kkkkk	N	Wilkins 975XLD 3/4 (H)
RPDA	Wilkins	375DA	2 1/2	H	18-Feb-2014		Y	9	(hh),qqq,vvv,www,yyyy,zzzz,kkkkk	N	Wilkins 975XLD 3/4 (H)
RPDA	Wilkins	375DA	3	H	8-Oct-2002	8-Oct-2014	N	9	(hh),ff,mm,uu,zz,vvvv,wwww,yyyy,zzzz,kkkkk	N	Wilkins 975XLD 3/4 (H)
RPDA	Wilkins	375DA	3	H	18-Feb-2014		Y	9	(hh),qqq,vvv,www,yyyy,zzzz	N	Wilkins 975XLD 3/4 (H)
RPDA	Wilkins	375DA	4	H	13-Dec-2000	13-Dec-2015	N	9	(hh),ff,mm,uu,zz,qqq,vvv,www.zzz,eeee,vvvv,wwww,yyyy,zzzz,kkkkk	N	Wilkins 975XLD 3/4 (H)
RPDA	Wilkins	375DA	4	H	18-Feb-2014		Y	9	(hh),qqq,vvv,www,yyyy,zzzz	N	Wilkins 975XLD 3/4 (H)
RPDA	Wilkins	375DA	6	H	31-May-2001	31-May-2013	N	9	(hh),ff,mm,uu,zz,qqq,vvv,www.zzz,eeee,vvvv,wwww,yyyy,zzzz,kkkkk	N	Wilkins 975XLD 3/4 (H)
RPDA	Wilkins	375DA	6	H	18-Feb-2014		Y	9	(hh),qqq,vvv,www,yyyy,zzzz	N	Wilkins 975XLD 3/4 (H)
RPDA	Wilkins	375DA	8	H	15-Jun-2004	15-Jun-2013	N	9	(hh),ff,mm,uu,zz,qqq,vvv,www.zzz,eeee,vvvv,wwww,yyyy,zzzz,kkkkk	N	Wilkins 975XLD 3/4" (H)
RPDA	Wilkins	375DA	8	H	18-Feb-2014		Y	9	(hh),qqq,vvv,www,yyyy,zzzz	N	Wilkins 975XLD 3/4" (H)
RPDA	Wilkins	375DA	10	H	22-Nov-2004	22-Nov-2013	N	9	(hh),ff,mm,uu,zz,qqq,vvv,www.zzz,eeee,vvvv,wwww,yyyy,zzzz,kkkkk	N	Wilkins 975XLD 3/4" (H)
RPDA	Wilkins	375DA	10	H	18-Feb-2014		Y	9	(hh),qqq,vvv,www,yyyy,zzzz	N	Wilkins 975XLD 3/4" (H)
RPDA	Wilkins	475DA	4	VUVD	20-Mar-2001	20-Mar-2016	N	9	(qqq),ttt,www,yyy,zzz,eeee,uuuu,vvvv,xxxx,yyyy,kkkkk,lllll	N	Wilkins 975XLD 3/4 (H)
RPDA	Wilkins	475DA	4	VUVD	18-Feb-2014		Y	9	(hh),qqq,vvv,www,yyyy,zzzz	N	Wilkins 975XLD 3/4 (H)
RPDA	Wilkins	475DA	6	VUVD	31-May-2001	31-May-2013	N	9	(qqq),ttt,www,yyy,zzz,eeee,uuuu,vvvv,xxxx,yyyy,kkkkk,lllll	N	Wilkins 975XLD 3/4 (H)
RPDA	Wilkins	475DA	6	VUVD	18-Feb-2014		Y	9	(hh),qqq,vvv,www,yyyy,zzzz	N	Wilkins 975XLD 3/4 (H)
RPDA	Wilkins	475DA	8	VUVD	11-Aug-2004	11-Aug-2013	N	9	(qqq),ttt,www,yyy,zzz,eeee,uuuu,vvvv,xxxx,yyyy,kkkkk,lllll	N	Wilkins 975XLD 3/4 (H)
RPDA	Wilkins	475DA	8	VUVD	18-Feb-2014		Y	9	(hh),qqq,vvv,www,yyyy,zzzz	N	Wilkins 975XLD 3/4 (H)
RPDA	Wilkins	475DAV	4	VUVU	20-Mar-2001	20-Mar-2016	N	9	(qqq),mm,ttt,www,yyy,zzz,eeee,uuuu,vvvv,xxxx,yyyy,kkkkk,lllll	N	Wilkins 975XLD 3/4 (H)
RPDA	Wilkins	475DAV	4	VUVU	18-Feb-2014		Y	9	(hh),qqq,vvv,www,yyyy,zzzz	N	Wilkins 975XLD 3/4 (H)
RPDA	Wilkins	475DAV	6	VUVU	20-Jul-2004	20-Jul-2013	N	9	(qqq),mm,ttt,www,yyy,zzz,eeee,uuuu,vvvv,xxxx,yyyy,kkkkk,lllll	N	Wilkins 975XLD 3/4 (H)
RPDA	Wilkins	475DAV	6	VUVU	18-Feb-2014		Y	9	(hh),qqq,vvv,www,yyyy,zzzz	N	Wilkins 975XLD 3/4 (H)
RPDA	Wilkins	475DAV	8	VUVU	24-Apr-2004	24-Apr-2013	N	9	(qqq),mm,ttt,www,yyy,zzz,eeee,uuuu,vvvv,xxxx,yyyy,kkkkk,lllll	N	Wilkins 975XLD 3/4 (H)
RPDA	Wilkins	475DAV	8	VUVU	18-Feb-2014		Y	9	(hh),qqq,vvv,www,yyyy,zzzz	N	Wilkins 975XLD 3/4 (H)
RPDA	Wilkins	975DA	2 1/2	H	1-Feb-1994	1-Feb-2015	N	8	(hh),ff,uu,zz,vvvv,wwww,yyyy,zzzz	N	Wilkins 975 3/4 (H)
RPDA	Wilkins	975DA	3	H	1-Feb-1994	1-Feb-2015	N	8	(hh),ff,uu,zz,vvvv,wwww,yyyy,zzzz	N	Wilkins 975 3/4 (H)
AVB	Watts	288AM5	3/4	VUH	1-Nov-1991	1-Nov-2015	N	8		N	
AVB	Watts	288AM5	1	VUH	1-Nov-1991	1-Nov-2015	N	8		N	
DC	Ames	2000-DC	10	H	4-Aug-1987	2-Aug-2014	N	7	tt,ee,ff,gg,hh,ll,mm,oo,pp,uu,ccc,ddd,ffff,gggg	Y	
DC	Ames	2000-DCA	4	H	11-Jan-1988	11-Jan-2015	N	7	tt,ee,ff,gg,hh,ll,mm,oo,pp,uu,ccc,ddd,ffff,gggg	Y	
DC	Ames	2000-DCA	6	H	11-Jan-1988	11-Jan-2015	N	7	tt,ee,ff,gg,hh,ll,mm,oo,pp,uu,ccc,ddd,ffff,gggg	Y	
DC	Ames	2000-DCA	8	H	11-Jan-1988	11-Jan-2015	N	7	tt,ee,ff,gg,hh,ll,mm,oo,pp,uu,ccc,ddd,ffff,gggg	Y	
DC	Ames	2000-G-DC	10	H	4-Aug-1987	4-Aug-2014	N	7	tt,ee,ff,gg,hh,ll,mm,oo,pp,uu,ccc,ddd,ffff,gggg	Y	
DC	Ames	2000-G-DCA	4	H	11-Jan-1988	11-Jan-2015	N	7	tt,ee,ff,gg,hh,ll,mm,oo,pp,uu,ccc,ddd,ffff,gggg	Y	
DC	Ames	2000-G-DCA	6	H	11-Jan-1988	11-Jan-2015	N	7	tt,ee,ff,gg,hh,ll,mm,oo,pp,uu,ccc,ddd,ffff,gggg	Y	
DC	Ames	2000-G-DCA	8	H	11-Jan-1988	11-Jan-2015	N	7	tt,ee,ff,gg,hh,ll,mm,oo,pp,uu,ccc,ddd,ffff,gggg	Y	
DC	Ames	2000B	1/2	H	6-Dec-1983	6-Dec-2013	N	8	(vv),xx,ooo,hhhh,pppp,rrrrr	N	
DC	Ames	2000B	1/2	H	16-Jun-1997	16-Jun-2015	N	9	(vv),xx,ooo,hhhh,pppp,rrrrr	N	
DC	Ames	2000B	1/2	VU	16-Jun-1997	16-Jun-2015	N	9	(vv),xx,ooo,hhhh,pppp,rrrrr	N	
DC	Ames	2000B	3/4	H	5-Apr-1993	5-Apr-2014	N	8	(vv),xx,ooo,hhhh,pppp,rrrrr	N	
DC	Ames	2000B	3/4	VU	27-Aug-1996	27-Aug-2014	N	8	(vv),xx,ooo,hhhh,pppp,rrrrr	N	
DC	Ames	2000B	1	H	18-May-1998	18-May-2013	N	9	(vv),xx,ooo,hhhh,pppp,rrrrr	N	
DC	Ames	2000B	1	H	26-Feb-1991	26-Feb-2015	N	8	(vv),xx,ooo,hhhh,pppp,rrrrr	N	
DC	Ames	2000B	1	VU	18-May-1998	18-May-2013	N	9	(vv),xx,ooo,hhhh,pppp,rrrrr	N	
DC	Ames	2000B	1 1/4	H	1-Oct-1996	1-Oct-2014	N	8	(vv),xx,ooo,hhhh,pppp,rrrrr	N	
DC	Ames	2000B	1 1/4	VU	1-Oct-1996	1-Oct-2014	N	8	(vv),xx,ooo,hhhh,pppp,rrrrr	N	
DC	Ames	2000B	1 1/2	H	24-May-1994	24-May-2015	N	8	(vv),xx,ooo,hhhh,pppp,rrrrr	N	
DC	Ames	2000B	1 1/2	VU	11-Mar-1996	11-Mar-2014	N	8	(vv),xx,ooo,hhhh,pppp,rrrrr	N	
DC	Ames	2000B	2	H	30-Jun-1992	30-Jun-2013	N	8	(vv),xx,ooo,hhhh,pppp,rrrrr	N	
DC	Ames	2000B	2	VU	8-Mar-1996	8-Mar-2014	N	8	(vv),xx,ooo,hhhh,pppp,rrrrr	N	
DC	Ames	2000B-FP	3/4	H	1-Sep-2009	1-Sep-2015	N	9	(eeeee)	N	
DC	Ames	2000B-FP	1	H	1-Sep-2009	1-Sep-2015	N	9	(eeeee)	N	
DC	Ames	2000B-FP	1 1/4	H	1-Sep-2009	1-Sep-2015	N	9	(eeeee)	N	
DC	Ames	2000B-FP	1 1/2	H	1-Sep-2009	1-Sep-2015	N	9	(eeeee)	N	
DC	Ames	2000B-FP	2	H	1-Sep-2009	1-Sep-2015	N	9	(eeeee)	N	
DC	Ames	2000BM3	3/4	H	27-Mar-2000	27-Mar-2015	N	9	(vv),xx,ooo,hhhh,pppp,rrrrr	N	
DC	Ames	2000BM3	3/4	VU	27-Mar-2000	27-Mar-2015	N	9	(vv),xx,ooo,hhhh,pppp,rrrrr	N	
DC	Ames	2000BM3-FP	3/4	H	1-Sep-2009	1-Sep-2015	N	9	(eeeee)	N	
DC	Ames	2000CIV	4	H	15-Jan-1982	15-Jan-2015	N	6	(oo),gg,hh,ll,mm,pp,tt,uu,eee	N	
DC	Ames	2000CIV	4	VU	11-Mar-1996	11-Mar-2014	N	8	(oo),gg,hh,ll,mm,pp,tt,uu,eee	N	
DC	Ames	2000CIV	6	H	18-May-1982	18-May-2015	N	6	(oo),gg,hh,ll,mm,pp,tt,uu,eee	N	
DC	Ames	2000CIV	6	VU	5-Dec-1996	5-Dec-2014	N	8	(oo),gg,hh,ll,mm,pp,tt,uu,eee	N	

Special Notices

From time to time the Foundation issues Special Notices when specific information needs to be brought before the Members of the Foundation. A copy of the notices are sent to Foundation Members as they are published. Notices may also be found on the Internet at the World Wide Web address of http://www.usc.edu/fccchr/notice.html

Notices are summarized as follows.

Notice 96-001
This notice lists Ames assemblies which have been reported with low check valve readings. Corrections to the problem are discussed.
Notice 97-001
This Notice discusses changes in the Wilkins 975 8" and 10" reduced pressure principle assemblies. A change in the retaining cup in the relief valve stem.
Notice 97-002
This notice identifies Ames 2000SS, 3000SS, and 4000SS series assemblies were discovered to have unapproved components.
Notice 97-003
This notice lists assemblies which were NOT Approved by the Foundation, although advertisements may have implied otherwise.
Notice 98-001
This notice advises members of certain action in the Federal Register regarding cross-connection control programs.
Notice 98-002
This notice advises members of Wilkins 950 series and 975 series modifications.
Notice 99-001
This notice lists assemblies which were NOT Approved by the Foundation, although advertisements may have implied otherwise.
Notice 99-002
This notice lists assemblies which were NOT Approved by the Foundation, although advertisements may have implied otherwise.
Notice 99-003
This notice lists assemblies which were NOT Approved by the Foundation, although advertisements may have implied otherwise.
Notice 01-001
Discuss silicon parts in certain Febco relief valves
Notice 01-002/Revised Notice 01-002-R1
This notice discusses some check valves not approved in certain Ames and Watts asemblies
Notice 01-003
This notice lists assemblies which were NOT Approved by the Foundation, although advertisements may have implied otherwise.
Notice 02-001
This notice explains there are some specific Febco assemblies with unapproved check valve retainers.
Notice 03-001
This notice explains there are some improper markings of model designations on some Wilkins assemblies
Notice 03-002
This notice explains there is the possibility of the interference of the check valves on some Ames and Watts assemblies
Notice 04-001
This notice identifies some Febco 825YA assemblies sold with a dimensional variation
Notice 05-001
This Notice identifies some Ames and Watts assemblies sold with unapproved disc material.
Notice 06-001
This notice identifies unapproved guides found in certain Febco assemblies
Notice 06-002
This notice identifies a change in the design of the Flomatic PVBs
Notice 06-003
Notice regarding Cash-Acme Assemblies
Notice 07-001
Out of tolerance springs on Conbraco assemblies
Notice 09-001
Unapproved Third party components are being distributed
Notice 13-001
Modifications to guiding surfaces of the check valves on Wilkins Assemblies
Notice 14-001
Clarifies the Approval status of Apollo/Conbraco backflow prevention assemblies
Notice 14-002
Clarifies the method in which the model designation is indicated on the Wilkins 3/4" 950XLD and 975XLD assemblies
Notice 15-001
This notice has been prepared to review Special Notice 14-002 and clarify the USC Approval Status of Wilkins Reduced Pressure Principle Detector Assemblies (RPDAs).